PROJECTION TV RECEIVER

Chassis : J51A(REV. 1)
Model : SP43J5HFX/SED
SP43J5HFX/RAD
SP53J5HFX/RAD
SP61J5HFX/RAD

SERVICE Manual

PROJECTION TV RECEIVER

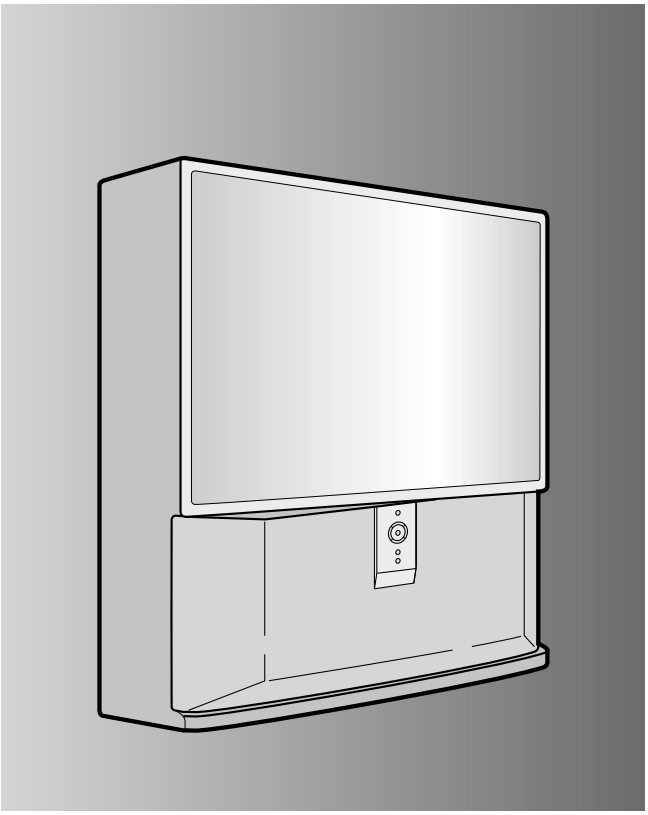

CONTENTS

1. Precautions
2. Reference Information
3. Specifications
4. Alignment and Adjustments
5. Troubleshooting
6. Exploded View and Parts List
7. Electrical Parts List
8. Block Diagrams
9. Wiring Diagram
10. Schematic Diagrams

4. Alignment and Adjustments

4-1 When entering the service mode:

1. Turn on the TV and then select “STANDARD”on the picture adjustment mode.

2. Turn off the TV (STAND-BY).

3. Enter the service mode by pressing the remote control keys in the following sequence :
   DISPLAY→MENU→MUTE →Power On

Note : If necessary, re-do steps 1~3.

Initial display when the service mode is switched.

1. When a RF signal is received

SERVICE MODE

GEOMETRICS
PICTURE
PICTURE2
PIP
OPTIONS
RESET

2. When the PC mode is received

(Press to F.MENU)

MAIN MENU

ZOOM
COMPRESS
FREEZE
SET UP
RESET
EXIT

3. Service Mode Control Keys

MAIN MENU	MENU DISPLAY
CH UP/DOWN	Select item by moving cursor
VOL UP/DOWN	Decrease or increase the adjustment values

Note : The PC mode can be switched to the service mode by pressing the F.Mode Key (only on the factory remote control).

PAL (43”)

ITEM	FUNCTION	INITIAL VALUE	ITEM	FUNCTION	INITIAL VALUE
GEOMETRIC(PAL/NTSC)					
VS	V-SHIFT	106/124	LOC	LO-CORR	128
VA	V-SIZE	60/76(Variable)	HEH	H-EHT	0
VL	V-LINEAR	114	VE	V-EHT	0
VSC	V-S-COLOR	104	VAN	V-ANGLE	124
HS	H-SHIFT	73/77	VBO	V-BOW	128
HA	H-SIZE	78/86(Variable)	HSP	H-SYNC-PHASE	138
PPH	PIN-PHASE	143/180	--		0
PAM	PIN-AMP	70	--		0
UPC	UP-CORR	128	--		0
PICTURE					
SBR	SUB-BRIGHT	20(Variable)	BCT	B-CUT OFF	31(Variable)
RDR	R-DRIVE	22(Variable)	GAM	GAMMA LEVEL	12
GDR	G-DRIVE	31	ABM	ABL MODE	1
BDR	B-DRIVE	37(Variable)	ATH	ABL Threshold	1
RCT	R-CUT OFF	9(Variable)	PYD	PAL/NT Y/C DELAY	10
GCT	G-CUT OFF	31	SYD	SECAM Y/C DELAY	10
PICTURE2					
SHC	SUB-HUE	7	SFO	SHARPNESS-FO	2
R-R	R-Y AXIS R-Y	3	LTI	LUMINANCE	2
R-B	R-Y AXIS R-Y	7	CTI	CHROMINANCE	1
G-R	R-Y AXIS R-Y	15	POV	PRE-OVERSHOOT	3
G-B	R-Y AXIS R-Y	2	VML	VM-LEVEL	2
SCN	SUB-CONTRAST	7(Variable)	VMD	VM-DELAY	3
SCR	SUB-COLOR	15	DCT	DC-TRAN	3
HWD	HSYNC WIDTH	1	DNP	AUTO PEDESTAL	3
HTM	HSYNC-TIME-MASK	1	BPF	BAND PASS FILTER	12
SHP	SUB-SHARPNESS	3	HPF	HIGH PASS FILTER	10
PIP					
PCN	CONTRAST	8(Variable)			
PHP	POS-HOR	55(Variable)			
PVP	POS-VER	27(Variable)			
OPTION					
TTX	OFF, WEST/ARABIC, EAST/FARSI		PC	ON, OFF	
LNA	ON,OFF		SCART2	OFF, TV OUT, MONITOR OUT	
			THAI	ON, OFF	
LANGUAGE					
MULTI-12	Eng, Arab, French, Thai, Russian, Croatian, Polish, Turkish, Hungaran, Iran, Pakistan, Hindi				
MidEast	Eng, Arab, French, Turkish, Iran, Pakistan				
Asia	Eng, Thai, Hindi				
Russia	Eng, Russia				
M. Europe	Eng, Croatian, Polish, Hungaran				

PAL (53”)

ITEM	FUNCTION	INITIAL VALUE	ITEM	FUNCTION	INITIAL VALUE
GEOMETRIC(PAL/NTSC)					
VS	V-SHIFT	106/124	LOC	LO-CORR	128
VA	V-SIZE	72/83(Variable)	HEH	H-EHT	0
VL	V-LINEAR	114	VE	V-EHT	0
VSC	V-S-COLOR	104	VAN	V-ANGLE	124
HS	H-SHIFT	73/77	VBO	V-BOW	128
HA	H-SIZE	79/86(Variable)	HSP	H-SYNC-PHASE	138
PPH	PIN-PHASE	143/180	--		0
PAM	PIN-AMP	70	--		0
UPC	UP-CORR	128	--		0
PICTURE					
SBR	SUB-BRIGHT	19(Variable)	BCT	B-CUT OFF	28(Variable)
RDR	R-DRIVE	15(Variable)	GAM	GAMMA LEVEL	12
GDR	G-DRIVE	31	ABM	ABL MODE	1
BDR	B-DRIVE	29(Variable)	ATH	ABL THRESHOLD	1
RCT	R-CUT OFF	17(Variable)	PYD	PAL/NT Y/C DELAY	10
GCT	G-CUT OFF	31	SYD	SECAM Y/C DELAY	10
PICTURE2					
SHC	SUB-HUE	7	SFO	SHARPNESS-FO	2
R-R	R-Y AXIS R-Y	3	STI	LUMINANCE	2
R-B	R-Y AXIS R-Y	7	CTI	CHROMINANCE	1
G-R	R-Y AXIS R-Y	15	POV	PRE-OVERSHOOT	3
G-B	R-Y AXIS R-Y	2	VML	VM-LEVEL	2
SCN	SUB-CONTRAST	13(Variable)	VMD	VM-DELAY	3
SCR	SUB-COLOR	15	DCT	DC-TRAN	3
HWD	HSYNC WIDTH	1	DNP	AUTO PEDESTAL	3
HTM	HSYNC-TIME-MASK	1	BPF	BAND PASS FILTER	12
SHP	SUB-SHARPNESS	3	HPF	HIGH PASS FILTER	10
PIP					
PCN	CONTRAST	8(Variable)			
PHP	POS-HOR	55(Variable)			
PVP	POS-VER	27(Variable)			
OPTION					
TTX	OFF, WEST/ARABIC, EAST/FARSI		PC	ON, OFF	
LNA	ON,OFF		SCART2	OFF, TV OUT, MONITOR OUT	
			THAI	ON, OFF	
LANGUAGE					
MULTI-12	Eng, Arab, French, Thai, Russian, Croatian, Polish, Turkish, Hungaran, Iran, Pakistan, Hindi				
MidEast	Eng, Arab, French, Turkish, Iran, Pakistan				
Asia	Eng, Thai, Hindi				
Russia	Eng, Russia				
M. Europe	Eng, Croatian, Polish, Hungaran				

PAL (61”)

ITEM	FUNCTION	INITIAL VALUE	ITEM	FUNCTION	INITIAL VALUE
GEOMETRIC(PAL/NTSC)					
VS	V-SHIFT	106/124	LOC	LO-CORR	128
VA	V-SIZE	90/94(Variable)	HEH	H-EHT	0
VL	V-LINEAR	114	VE	V-EHT	0
VSC	V-S-COLOR	104	VAN	V-ANGLE	124
HS	H-SHIFT	73/77	VBO	V-BOW	128
HA	H-SIZE	62/74(Variable)	HSP	H-SYNC-PHASE	138
PPH	PIN-PHASE	143/180	--		0
PAM	PIN-AMP	70	--		0
UPC	UP-CORR	128	--		0
PICTURE					
SBR	SUB-BRIGHT	25(Variable)	BCT	B-CUT OFF	23(Variable)
RDR	R-DRIVE	8(Variable)	GAM	GAMMA LEVEL	12
GDR	G-DRIVE	31	ABM	ABL MODE	1
BDR	B-DRIVE	32(Variable)	ATH	ABL Threshold	1
RCT	R-CUT OFF	16(Variable)	PYD	PAL/NT Y/C DELAY	10
GCT	G-CUT OFF	31	SYD	SECAM Y/C DELAY	10
PICTURE2					
SHC	SUB-HUE	7	SFO	SHARPNESS-FO	2
R-R	R-Y AXIS R-Y	3	STI	LUMINANCE	2
R-B	R-Y AXIS R-Y	7	CTI	CHROMINANCE	1
G-R	R-Y AXIS R-Y	15	POV	PRE-OVERSHOOT	3
G-B	R-Y AXIS R-Y	2	VML	VM-LEVEL	2
SCN	SUB-CONTRAST	13(Variable)	VMD	VM-DELAY	3
SCR	SUB-COLOR	15	DCT	DC-TRAN	3
HWD	HSYNC WIDTH	1	DNP	AUTO PEDESTAL	3
HTM	HSYNC-TIME-MASK	1	BPF	BAND PASS FILTER	12
SHP	SUB-SHARPNESS	3	HPF	HIGH PASS FILTER	10
PIP					
PCN	CONTRAST	8(Variable)			
PHP	POS-HOR	55(Variable)			
PVP	POS-VER	27(Variable)			
OPTION					
TTX	OFF, WEST/ARABIC, EAST/FARSI		PC	ON, OFF	
LNA	ON,OFF		SCART2	OFF, TV OUT, MONITOR OUT	
			THAI	ON, OFF	
LANGUAGE					
MULTI-12	Eng, Arab, French, Thai, Russian, Croatian, Polish, Turkish, Hungaran, Iran, Pakistan, Hindi				
MidEast	Eng, Arab, French, Turkish, Iran, Pakistan				
Asia	Eng, Thai, Hindi				
Russia	Eng, Russia				
M. Europe	Eng, Croatian, Polish, Hungaran				

4-2 Screen Change (When adjusting I²C Bus Geometric items)

1 V SHIFT

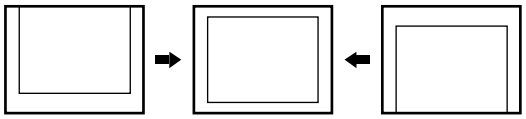

6 V SIZE

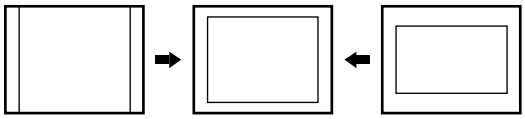

2 V LINEARITY

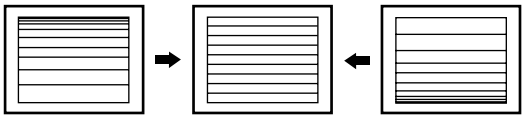

7 V - S - CORRECTION

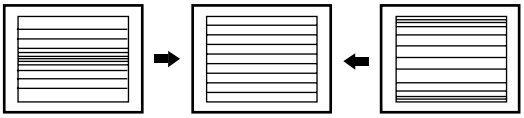

3 H SIZE

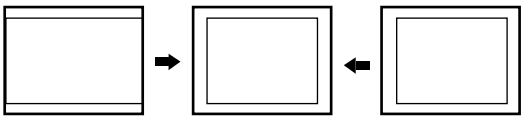

8 PIN PHASE

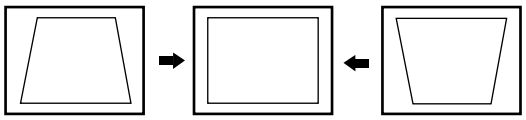

4 PIN AMP

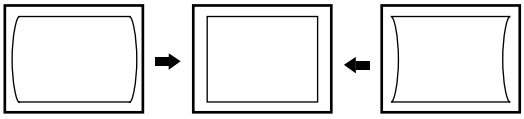

9 H SHIFT

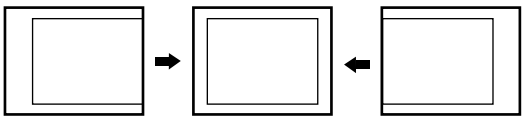

5 V ANGLE

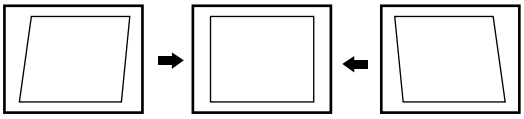

10 V BOW

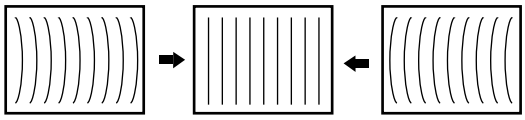

4-3 Beam Alignment

PRECAUTION

1. Input a crosshatch and dot pattern.
2. Select the “STANDARD” video mode.
3. Warm up the TV for at least 10 minutes.
4. Connect an audio oscillator to the pin jig between GT401~GT402 (located on the deflection PCB) and GND.
5. Determine the ZERO-magnet area (using the beam-alignment CY)
6. Check the squarewave at the point where the focus is misaligned (Use an audio oscillator).

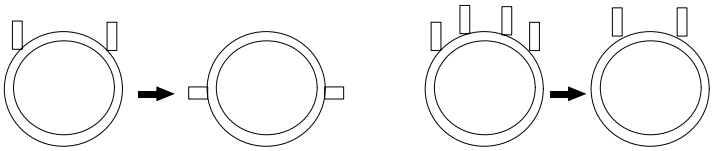

(Creation of CPM Zero Magnet) (Creation of the 2-pole/4-pole zero magnets)

ADJUSTMENT

1. Cover the Red and Blue lenses.
2. Adjust the Green lens as shown in the figures below

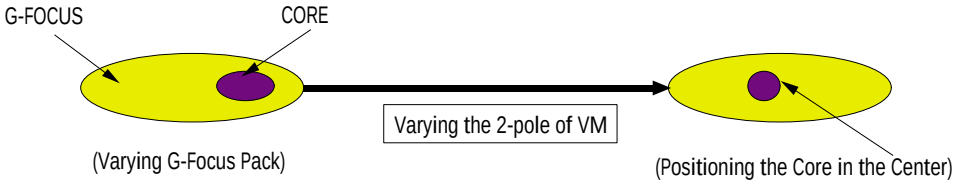

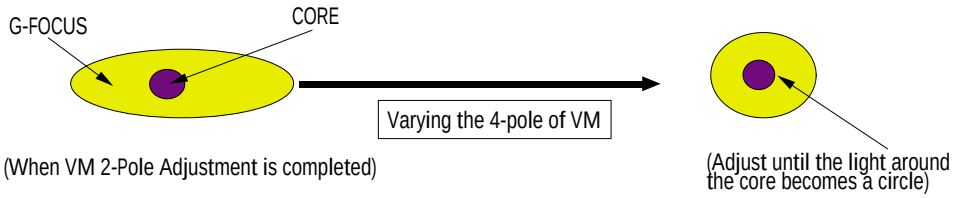

3. Adjust the G-Focus until any light around the core disappears.
4. Cover the Green and Blue lenses.
5. Adjust the Red lens using the same method as with the Green lens.
6. Note: The Blue lens is not adjusted because its focus varies little (VM-coil is installed).
7. After the adjustments are completed, disconnect the jig pin connector.

4-4 Other Adjustments

4-4-1 Screen Adjustment

1. Warm up the TV for at least 30 minutes.
2. Turn to the Video Mode (No Signal) using a remote-control.
3. Connect an oscilloscope to RK,GK,BK.
4. Adjust the VR (VR501, VR531, VR561) screen so that RK, GK, BK pulse is 20Vp-p each. (Turn the R,G,B VR screen fully counterclockwise in the area of each flyback line.)

4-4-2 White Balance Adjustment

1. Select the “STANDARD” video mode.
2. Input 100% white pattern.
3. In the stand-by mode, press the remote-control keys in the following sequence: DISPLAY→MENU→MUTE →Power On
4. Warm up the TV for at least 30 minutes.
5. Input a 10-step signal.
6. R-cut off, B-cut off, and G-cut off by pressing the Volume +/- keys.
7. Adjust the low light with viewing the dark side of the screen.
8. Select R-drive, G-drive, and B-drive by pressing the Volume +/- keys.
9. Adjust the high light with viewing the light side of the screen.
10. If necessary, redo adjustments 6~9.
11. Press the Menu key to exit.

4-4-3 Sub-Brightness Adjustment

1. Input a sub-brightness adjustment signal. (TOSHIBA PATTERN)
2. In the stand-by mode, press the remote-control keys in the following sequence : DISPLAY→MENU→MUTE →Power On
3. Select SBT by pressing the Volume +/- keys.
4. Adjust so that the 7th step on the right side of the screen is not seen (Use the Volume +/- keys).
5. Press the Menu key to exit.

4-4-4 High Voltage (31KV) Check

PRECAUTION

1. Input a lion head pattern.
2. Select “STANDARD” video mode.
3. Warm up the TV for at least 10 minutes.
4. Use a 1000:1 probe.

ADJUSTMENT

1. Connect the (+) terminal of the 1000:1 probe to the high voltage distributor and the (-) terminal to GND (located on the deflection board).
2. Adjust VR471 (located on the deflection board) so that the digital meter indicates DC 31V ± 0.1V.

4-4-5 F.S. (Fail Safe) Circuit Check

Note : The F.S. Circuit check must be performed after servicing.

1. Turn on the TV.
2. Select the “STANDARD” video mode.
3. Short GT18, GT17 (located on the Convergence PCB). Then, both sound and picture disappear. (Note: Even if the shorted terminals are removed, both sound and picture do not appear. This proves the F.S. circuit is working.)
4. To restore both sound and picture, turn off the TV and reset it after about 30 seconds.

4-4-6 Static Focus Adjustment

PRECAUTION

1. Select the “STANDARD” video mode.
2. Input a crosshatch pattern.
3. Cover the lenses that are not being adjusted.
4. Connect a convergence jig and read data.
5. Adjust the lens for best focus.
   (See Fig, 4-1, next page)

STATIC FOCUS (CONTINUED)

Vary the focus pack VR (Red, Blue) on the front cabinet. Adjust the TV for best possible focus around the center of the crosshatch pattern, without losing overall screen balance.
Figure Crosshatch Pattern
Examine these points together.

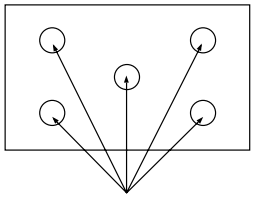

Examine these points together

Fig. 4-1 Crosshatch Pattern.

4-4-7 Lens Focus Adjustment

PRECAUTIONS

1. Do this adjustment after the static focus adjustment and the tilt adjustment.
2. Select the “STANDARD” video mode. (Contrast:64, Brightness:32)
3. Input a crosshatch pattern.

ADJUSTMENT

1. Loosen the lens screws.
2. Cover the two lenses that are not being adjusted.
3. Adjust the lens, observing the color aberration vertically and horizontally within 3 blocks of the center of the crosshatch pattern.
4. When the lens is turned clockwise, the color aberration will change as follows:

Lens	Color Aberration Change
R	Orange - Crimson
G	Blue - Red
B	Purple - Green

5. Green lens adjustment:
   Set the lens at the point where Blue just changes to Red. If the color aberration is irregular throughout the picture screen, adjust the lens to show Red color aberration (approximately 1~3 mm area) within a 3-block grid around the horizontal center-line. If the color aberration is irregular, adjust the lens as shown in the diagram below. (Accurate alignment of Green is important for overall color quality.)
6. Red lens adjustment
   Set the Red lens at the point where Orange becomes Crimson.
7. Blue lens adjustment
   Set the Blue lens at the point where Purple becomes Green.

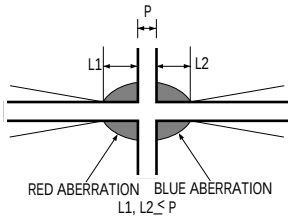

Fig. 4-2 Color Aberration

4-5 Screen-Jig

4-5-1 43J5 Convergence Jig Spec

43J5 Screen Size : X 873, Y 655 (X:374=7*2+30*12, Y:220=14*2+32*6)

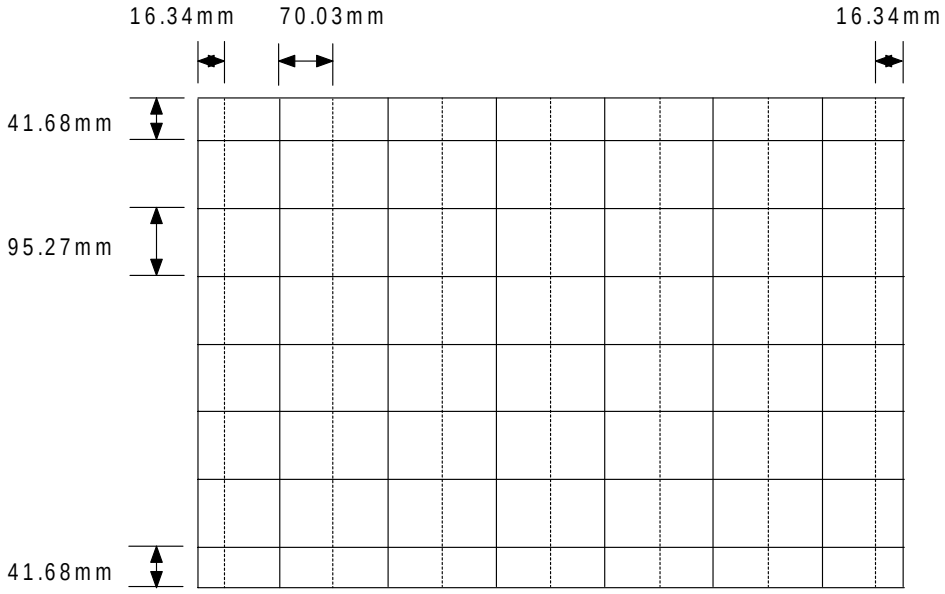

4-5-2 53J5 Convergence Jig Spec

53J5 Screen Size : X 1087, Y 817 (X:374=7*2+30*12, Y:220=14*2+32*6)

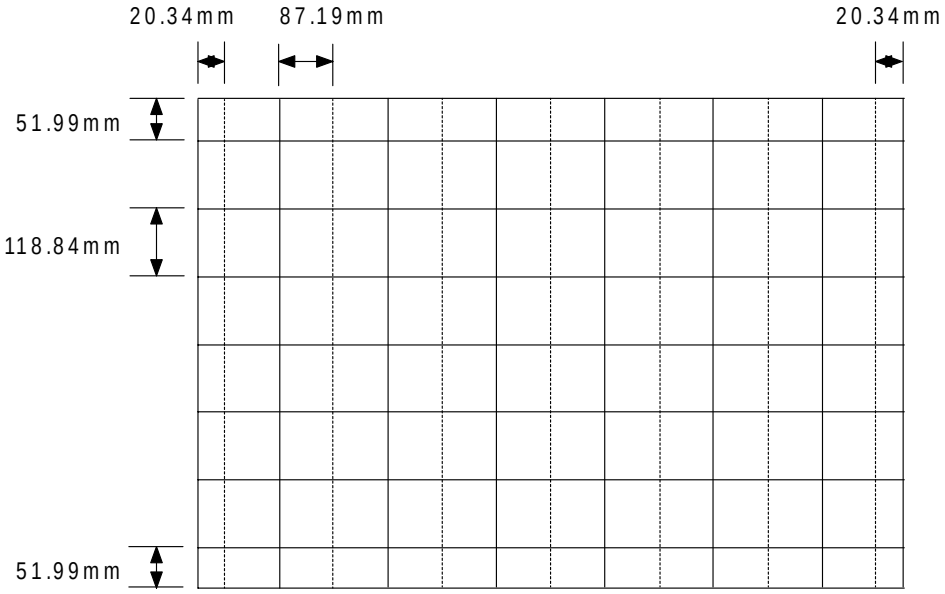

4-5-3 61J5 Convergence Jig Spec

61J5 Screen Size : X 1253, Y 943 (X:374=7*2+30*12, Y:220=14*2+32*6)

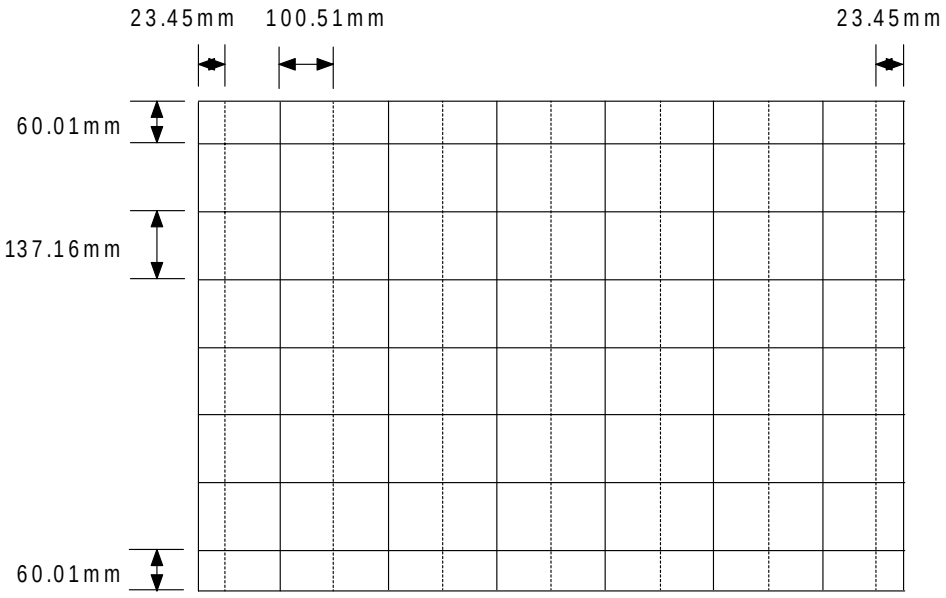

4-6 Remote Control for Servicing (Convergence Mode)

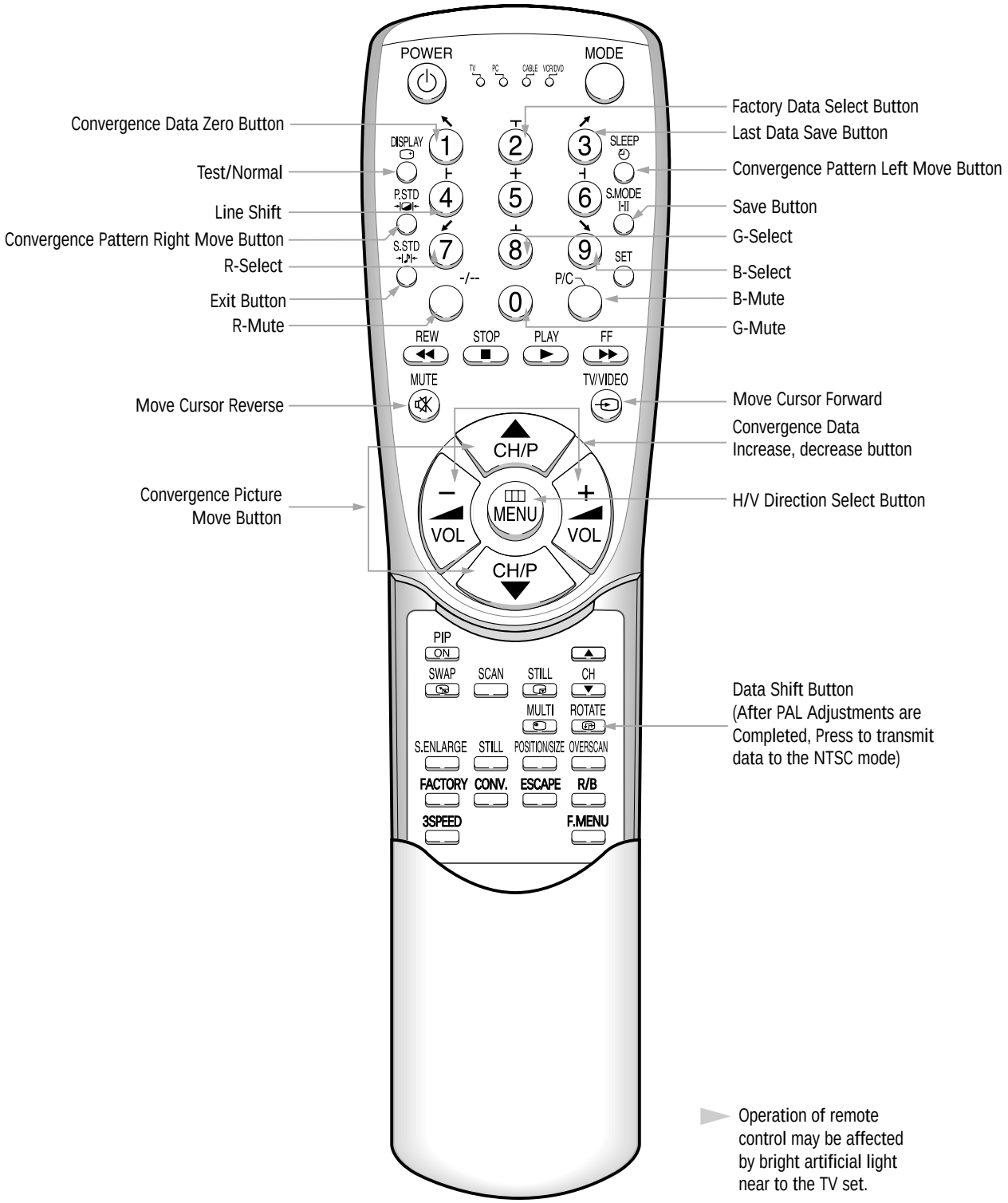

Operation of remote control may be affected by bright artificial light near to the TV set.

4-6-1 KEY Function

1. R-SELECT 7
   Press to select RED color.

2. G-SELECT 8
   Press to select GREEN color.

3. B-SELECT 9
   Press to select BLUE color.

4. R-MUTE
   Press to mute RED color.

5. G-MUTE 0
   Press to mute GREEN color.

6. B-MUTE P/C
   Press to mute BLUE color.

7. CANCEL KEY 3
   Press to revert to the previous data during the Convergence Adjustment.

8. TEST / NORMAL DISPLAY
   Press to check TV mode in the Convergence Mode.

9. LINE SHIFT 4
   Press to move a line up / down or left / right.

10. FACTORY DATA SELECT BUTTON 2
    Press to call the factory default values.

11. H / V DIRECTION SELECT BUTTON MENU
    Press to switch the cursor direction horizontally or vertically.

12. SAVE BUTTON S.MODE I-II

After the Convergence adjustments are completed, press to save data.

13. EXIT BUTTON P.STD

After the Convergence Adjustments are completed, press to exit to TV mode.

14. MOVE CURSOR FORWARD TV/VIDEO

Press to move the cursor right or down.

15. MOVE CURSOR REVERSE MUTE

Press to move the cursor left or up.

16. CONVERGENCE PICTURE MOVE BUTTON

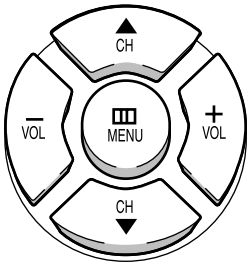

17. CONVERGENCE PATTERN MOVE BUTTON

Press to move the convergence pattern left (SLEEP) or right (P.STD) .

18. CONVERGENCE DATA ZERO BUTTON 1

Press to zero the convergence correction data.

19. DATA SHIFT BUTTON ROTATE

Press to transmit data (PAL mode / NTSC mode).

4-7 Convergence Adjustment

1. Warm up the TV for at least 30 minutes.

2. Input a PAL Signal. (Use an antenna or AV source.)

NOTE

Make sure that both deflection and convergence yokes are properly adjusted so that the center of Green, Red, Blue pattern is aligned on the center of screen jig.

3. Enter the Convergence Mode by pressing the remote control keys in the following sequence:

NOTE

If OSD is displayed as shown in figure below, press the S.STD key to exit.
Then, redo step 3 to enter the Convergence Mode.
After entering the Convergence Mode, Stand by for about five seconds before doing the adjustments.

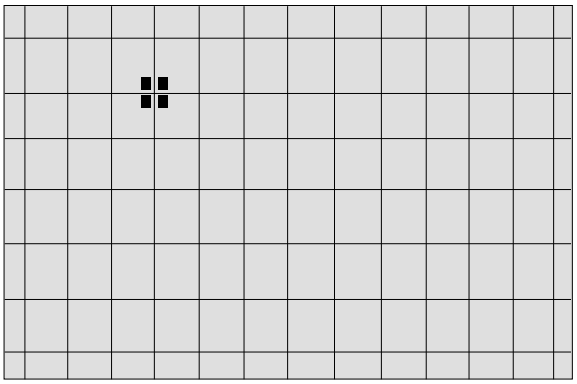

4. To adjust GREEN, first press the + and the P/C keys, and then press the 8 key.

5. The TV/VIDEO key moves the cursor right, and the MUTE key moves the cursor left.

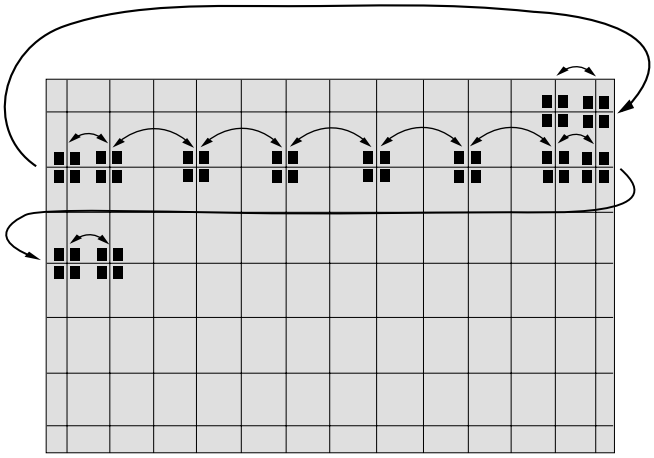

The MENU key moves the cursor horizontally or vertically.

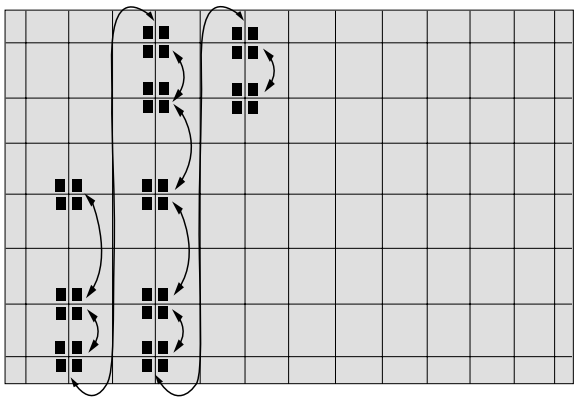

NOTE When the MENU key is pressed once again, the cursor moves horizontally.

7. Use the 4 key for overall balance.

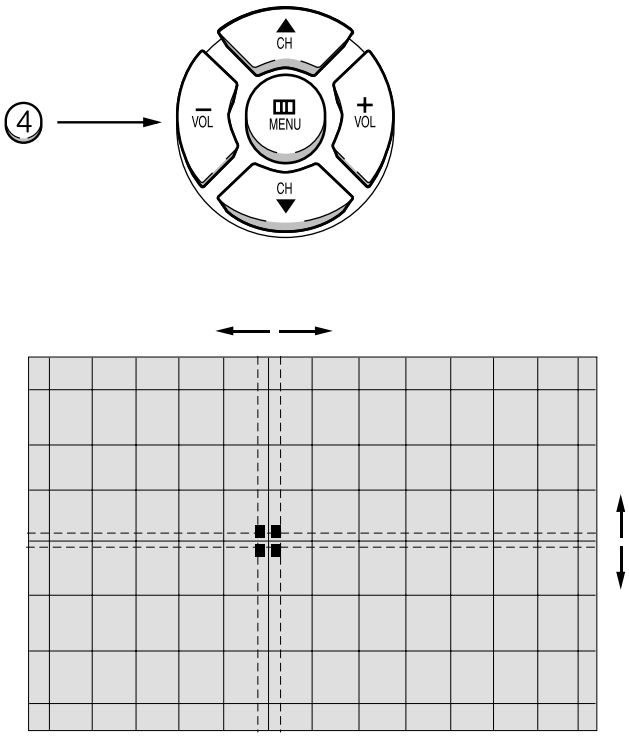

8. After the Line Shift is cancelled by pressing the 4 key, use the Channel and Volume keys (Up / Down) to make big adjustments.

9. After the green convergence adjustments are completed, press the S.MODE I-II key to save the data.

10. Superimpose the Red and Green colors by pressing the + and the 7 keys.

11. To adjust RED, redo steps5~8.

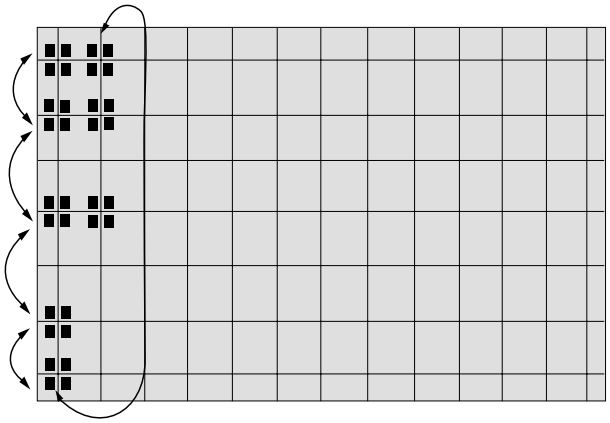

When the cursor moves vertically MENU

12. To superimpose the blue and green colors, press (1) the + key for R-Mute, (2) the P/C key to cancel the B-Mute, and (3) the 9 key for B-select.

13. To adjust BLUE, redo steps 5 ~ 8, 12.

14. If any color is not properly adjusted when displaying the red, blue and green colors, readjust the color.

15. After the color adjustments are completed, press the (S.MODE I-II) key to save the data.

NOTE

The cursor moves to center, and then automatically moves up and to the left about five seconds later.

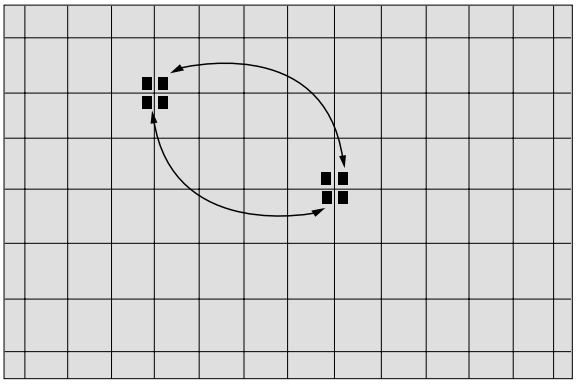

16. After the Convergence Adjustments are completed, press the S.STD key to exit.

4-8 PC Mode

4-8-1 TV Setup Mode

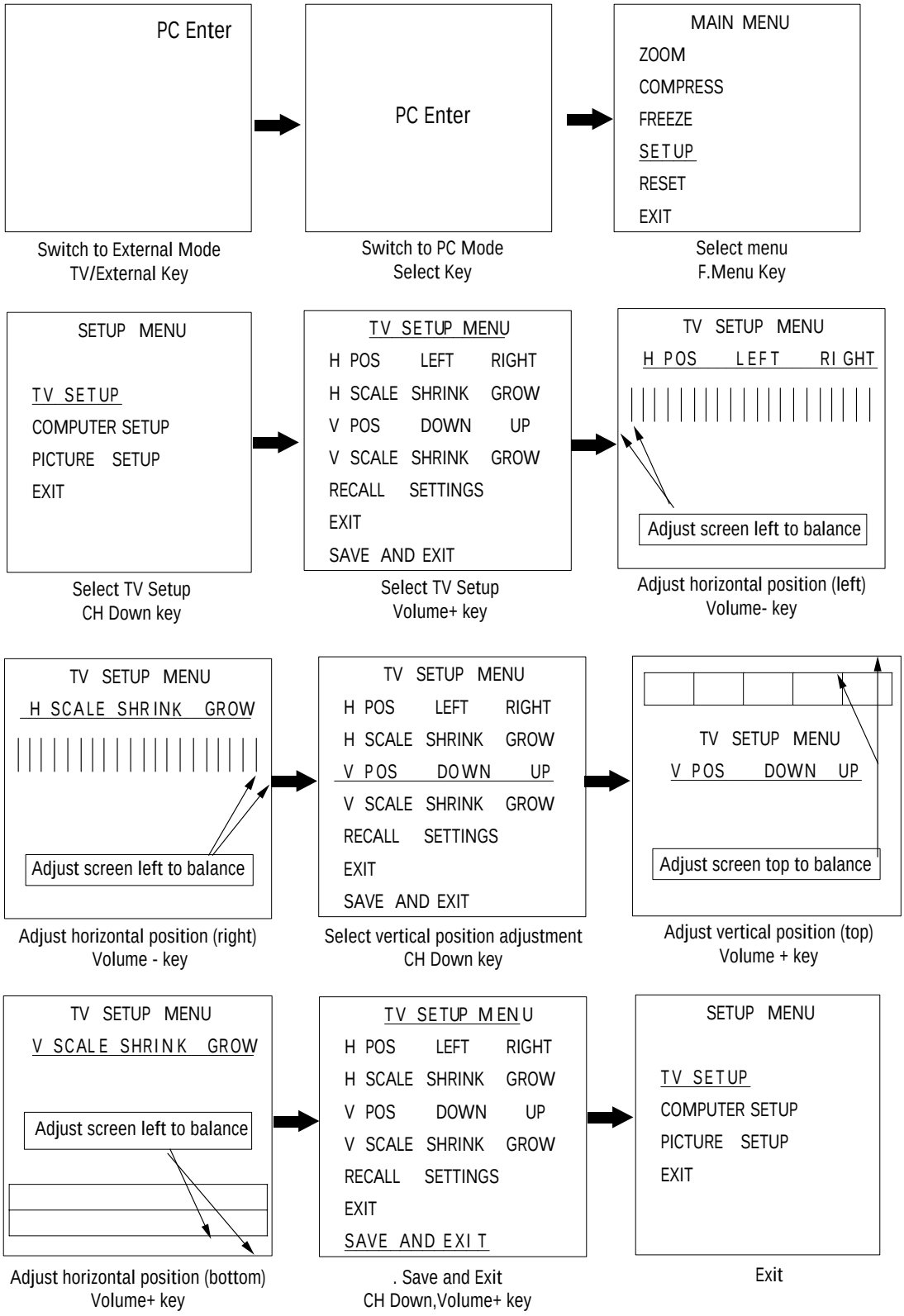

4-8-2 Picture Setup Mode

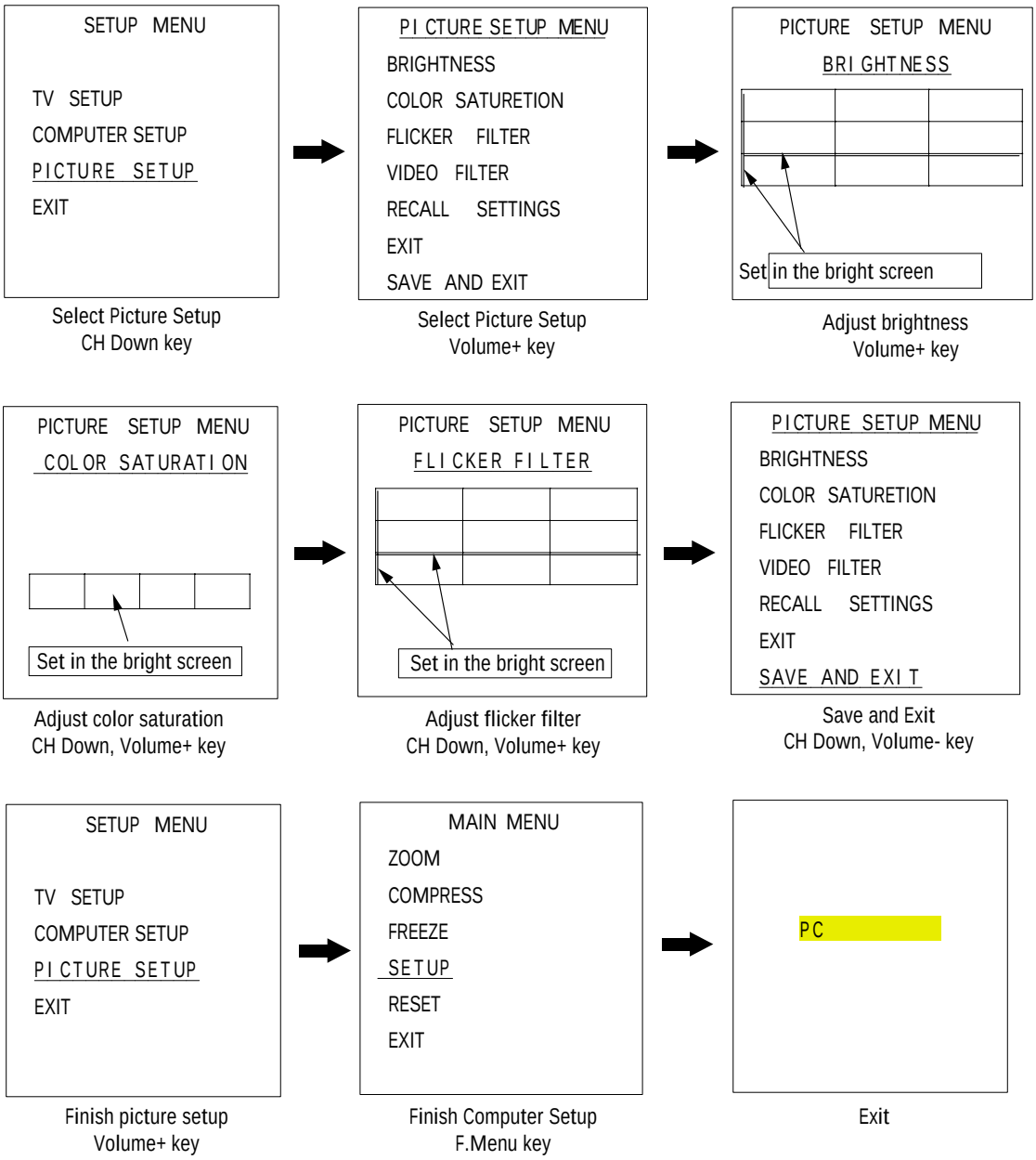

1. Adjust four different modes:VGA3 (VGA), VGA (DOS), VESA (SVGA), VEAS (XGA).

2). Perform the setup for each PC mode and picture setup.

4-8-3 Picture Setup Mode (computer setup mode only)

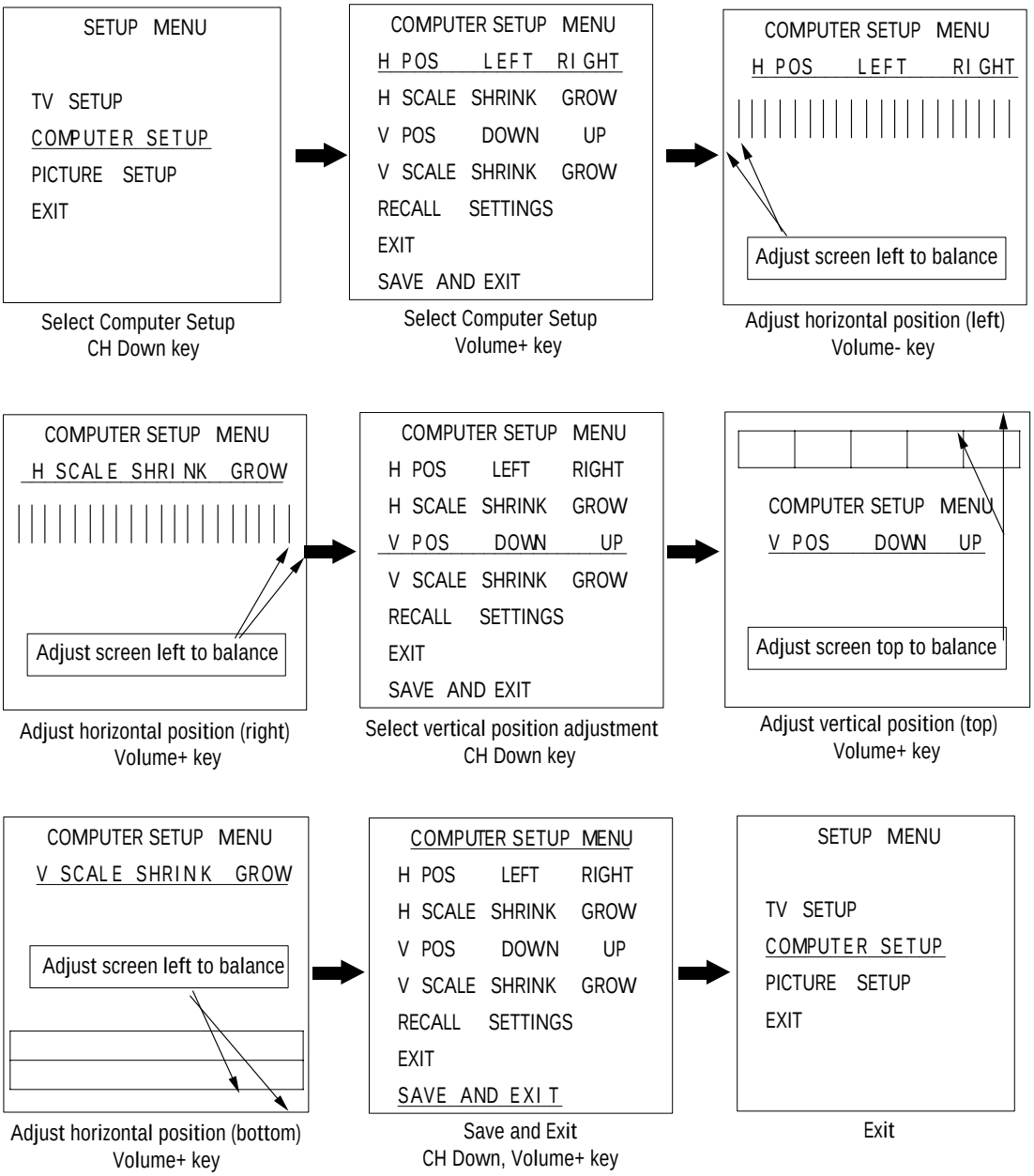

1. Adjust four different modes:VGA3 (VGA), VGA (DOS), VESA (SVGA), VEAS (XGA).
2. Perform the setup for each PC mode and picture setup.

4-9 MICOM and Pins Voltage

4-9-1 Pin Layout

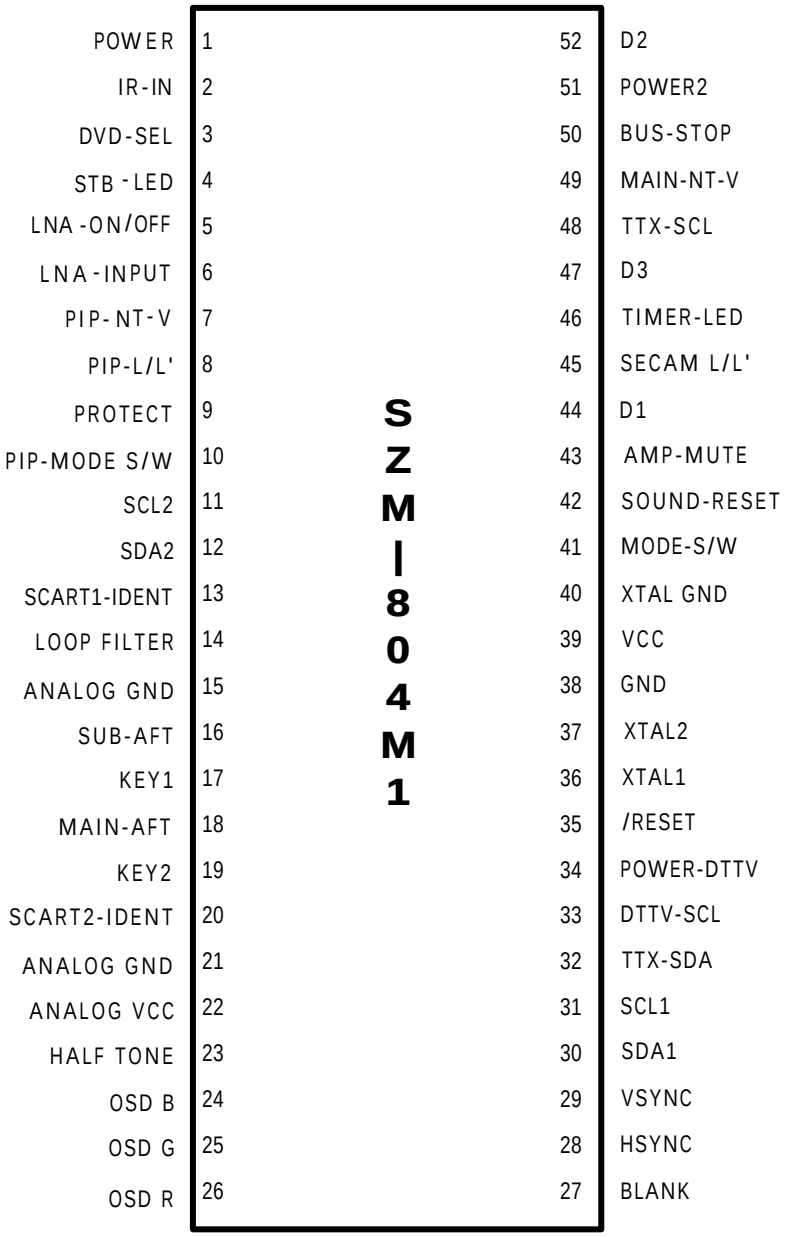

4-9-2 Micom Pins

PIN NO.	ITEM	FUNCTION	OUT VOLT
1	POWER	POWER ON/OFF RELAY CONTROL	H--> L
2	IR IN	REMOCON INPUT	4.7V
3	DVD-SEL	DVD SELECTION OUTPUT	4.7V
4	STB-LED	STAND-BY LED OUTPUT	4.6V
5	LNA-ON/OFF	LNA CONTROL OUTPUT	L
6	LNA-INPUT	LNA INPUT	L
7	PIP-NT-V	PIP VIDEO SAW FILTER SWITCH	L
8	PIP-L/L'	PIP SECAM SYSTEM SWITCH	L
9	PROTECT	PROTECT PORT	L
10	PIP-MODE S/W	PIP SECAM MODE SWITCH	L
11	SCL 2	CLOCK BUS LINE	4.5V
12	SDA 2	DATA BUS LINE	4.5V
13	SCART1-IDENT	SCART1 IDENT INPUT PORT	L/H
14	LOOP FILTER	LOOP FILTER	L
15	ANALOG GND	GND	L
16	SUB-AFT	SUB AUTO FINE TURNING CONTROL	2.3V
17	KEY 1	KEY SCAN 1	4.7V
18	MAIN-AFT	MAIN TUNER AFT	2.3V
19	KEY 2	KEY SCAN 2	4.8V
20	SCART2-IDENT	SCART2 IDENT INPUT PORT	H
21	ANALOG GND	GND	L
22	ANALOG VCC	VCC	5V
23	HALF TONE	SIGNAL FOR OSC-FREQUENCY OSD CONTROL	L
24	OSD B	ON SCREEN DISPLAY BLUE OUTPUT	L/H
25	OSD G	ON SCREEN DISPLAY GREEN OUTPUT	L/H
26	OSD R	ON SCREEN DISPLAY RED OUTPUT	L/H

PIN NO.	ITEM	FUNCTION	OUT VOLT
27	BLANK	OSD BLAKING SIGNAL OUTPUT	L/H
28	HSYNC	HORIZONTAL SYNC INPUT	4.5V
29	VSYNC	VERTICAL SYNC INPUT	4.6V
30	SDA1	DATA BUS LINE	4.5V
31	SCL1	CLOCK BUS LINE	4.5V
32	TTX-SDA	TELETEXT DATA BUS LINE	5V
33	DTTV-SCL	DTTV CLOCK LINE	L
34	POWER-DTTV	DTTV POWER CONTROL	L
35	/RESET	HARDWARE RESET	4.8V
36	XTAL1	CRYSTAL 1	2.3V
37	XTAL2	CRYSTAL 2	2.1V
38	GND	GND	L
39	VCC	VCC	5V
40	XTAL GND	CRYSTAL GND	L
41	MODE-S/W	MAIN SECAM MODE SWITCH	4.6V
42	SOUND-RESET	SOUND IC RESET	4.9V
43	AMP-MUTE	SOUND AMP. MUTE	L
44	D1	CONV. MODE CONTROL DATA1	L/H
45	SECAM L/L’	MAIN SECAM SYSTEM SWITCH	H
46	TIMER-LED	TIMER LED	4.6V
47	D3	CONV. MODE CONTROL DATA3	L/H
48	TTX-SCL	TELETEXT CLOCK BUS LINE	5V
49	MAIN-NT-V	MAIN VIDEO SAW FILTER SWITCH	L
50	BUS-STOP	I^2C BUS STOP	5V
51	POWER2	PC POWER CONTROL	4.6V
52	D2	CONV. MODE CONTROL DATA2	L/H

4-9-3 PROSCAN MDL

PIN NO.	ITEM	FUNCTION	OUT VOLT
1	DVD-Y	DVD-Y INPUT	2.04V
2	GND	GND	GND
3	MAIN-Y/CVBS	Y/CVBS INPUT	1.28V
4	MAIN-C	C-INPUT	2.92V
5	GND	GND	GND
6	R/Pr	R/Pr INPUT	2.0V
7	G/Y	G/Y INPUT	2.0V
8	B/Pb	B/Pb INPUT	2.0V
9	F/B	FAST BLANK INPUT	0.16V
10	GND	GND	GND
11	HS1	1H-SYNC OUT	-
12	VS1	V-SYNC OUT	-
13	GND	GND	GND
14	SDA-2	SERIAL DATA LINE 2	3.0V
15	SCL-2	SERIAL CLOCK LINE 2	3.5V
16	5V-B	5V-B INPUT	5V
17	HD	H-DRIVE OUT	1.6V
18	H-BLK	H-BLANK INPUT	-
19	VD+	VERTICAL DRIVE (+VOLTAGE)	2.6V
20	VD-	VERTICAL DRIVE (-VOLTAGE)	2.6V
21	ABL	ABL INPUT	2.15V
22	V-BLK	V-BLANK INPUT	-
23	EW	EAST WEST OUT	2.5V
24	SC	N.C	-
25	GND	GND	GND
26	SYNC	V-SYNC OUT	N.C
27	SYNC	H-SYNC OUT	N.C
28	5V-A	5V-B INPUT	-
29	GND	GND	GND
30	TEST-Y	WHEN CG ADJ PATTERN INPUT	-

PIN NO.	ITEM	FUNCTION	OUT VOLT
31	DTV-Y	DTV-Y INPUT	-
32	DTV-Pb	DTV-Pb INPUT	-
33	DTV-Pr	DTV-Pr INPUT	-
34	-	N.C	-
35	-	N.C	-
36	GND	GND	GND
37	OSD-R	OSD-R INPUT	-
38	OSD-G	OSD-G INPUT	-
39	OSD-B	OSD-B INPUT	-
40	YS	BLANK(MICOM OUT)	-
41	YM	NOT USED	-
42	V-MUTE	VIDEO MUTE	4.72V
43	GND	GND	GND
44	9V	9V	9V
45	T/P-R	TTX/PIP-R	-
46	T/P-G	TTX/PIP-G	-
47	T/P-B	TTX/PIP-B	-
48	T/P-F/B	TTX/PIP-F/B	-
49	GND	GND	
50	R-OUT	R-OUT	-
51	G-OUT	G-OUT	-
52	B-OUT	B-OUT	-
53	GND	GND	GND
54	IK	IK OUT	3.65V
55	SPOT	SPOT OUT	-
56	GND	GND	GND
57	VM-Y	VM-Y OUT	5.42V
58	-	N.C	-

4-9-4 PIP MODULE

PIN NO.	ITEM	FUNCTION	OUT VOLT
1	SCL	SERIAL CLOCK LINE	4.7V
2	SDA	SERAL DATA LINE	4.7V
3	8V	8V INPIUT	8V
4	GND	GND	0V
5	CVBS	5V-D INPUT	-
6	GND	GND	0V
7	5V-D	5V-D INPUT	5V
8	GND	GND	0V
9	PIP-AGC	PIP-AGC OUTPUT	3.36V
10	PIP-MODE S/W	PIP SECAM MODE SWITCH	0V
11	12V	12V INPUT	12V
12	PIP-L/L'	SECAM SYSTEM SWITCH	0V
13	PIP-NT-V	PIP VIDEO SAW FILTER SWITCH	0V
14	SUB-AFT	SUB-AFT OUTPUT	4.37V
15	GND	GND	0V
16	IF-IN	IF INPUT	-
17	IF-AGC	N.C	-
18	V-SYNC	V-SYNC INPUT	-
19	H-SYNC	H-SYNC INPUT	-
20	F/B	FAST BLANK OUTPUT	2.46V
21	GND	GND	0V
22	B	B OUTPUT	0.66V
23	G	G OUTPUT	0.66V
24	R	R OUTPUT	0.66V

4-9-5 F/CONVERTER MODULE

PIN NO.	ITEM	FUNCTION	OUT VOLT
1	5V	5V INPUT	5V
2	GND	GND	GND
3	R-IN	PC R INPUT	-
4	G-IN	PC G INPUT	-
5	B-IN	PC B INPUT	-
6	GND	GND	GND
7	HS	PC H-SYNC INPUT	-
8	VS	PC V-SYNC INPUT	-
9	GND	GND	GND
10	SDA	SERIAL DATA LINE	-
11	SCL	SERIAL CLOCK LINE	-
12	GND	GND	GND
13	IR	INPUT REMOCON	2.5V
14	GND	GND	GND
15	R-OUT/Y3	PC Y3 OUT	-
16	N.C	N.C	-
17	B-OUT/C3	PC C3 OUT	-

4-9-6 SOUND MODULE

PIN NO.	ITEM	FUNCTION	OUT VOLT
1	AV1-RIN	SCART-R INPUT	-
2	AV1-LIN	SCART-L INPUT	-
3	GND	GND	0V
4	EXT-RIN	EXT-R INPUT	-
5	EXT-LIN	EXT-L INPUT	-
6	GND	GND	0V
7	AV2-RIN	AV2-R INPUT	-
8	AV2-LIN	AV2-L INPUT	-
9	GND	GND	0V
10	AV1-LOUT	SCART1-L OUTPUT	-
11	AV1-ROUT	SCART1-R OUTPUT	-
12	S-CONTROL0	EXT-SOUND CONTROL OUTPUT	0V/8V
13	S-CONTROL1	EXT-SOUND CONTROL OUTPUT	0V/8V
14	M-OUT-L	MONITOR-L OUTPUT	-
15	M-OUT-R	MONITOR-R OUTPUT	-
16	GND	GND	0V
17	GND	GND	0V
18	QSS-IN	QUASI-SPLIT SOUND INPUT	1.95V
19	GND	GND	0V
20	AM-IN	AM INPUT	2.53V
21	SDA	SERIAL DATA LINE	4.6V
22	SCL	SERIAL CLOCK LINE	4.6V
23	GND	GND	0V
24	5V-A	5V-A INPUT	5V
25	8V	8V-INPUT	8V
26	AV4-RIN	AV4-R INPUT	-
27	AV4-LIN	AV4-L INPUT	-
28	S-RESET	SOUND RESET INPUT	5V

PIN NO.	ITEM	FUNCTION	OUT VOLT
30	12V	12V INPUT	12V
31	GND	GND	0V
32	SURROUND	DOLBY SURROUND OUTPUT	5.6V
33	GND	GND	0V
34	CENTER	DOLBY CENTER OUTPUT	5.6V
35	GND	GND	0V
36	MAIN-R	MAIN-R OUTPUT	5.6V
37	MAIN-L	MAIN-L OUTPUT	5.6V
38	GND	GND	0V
39	NC	N.C	-
40	NC	N.C	-

4-9-7 H/V MODULE

PIN NO.	ITEM	FUNCTION	OUT VOLT
1	12V	12V INPUT	12V
2	GND	GND	GND
3	HD	H-DRIVE INPUT	1.6V
4	V-BLK	V-BLANK INPUT	0.72V
5	2H-BLK	2H-BLANK OUT	0.54V
6	GND	GND	GND
7	PROTECT	PROTECT	ACTIV H
8	FBT-DC	FBT DC FEED BACK	4.87V
9	X-RAY	X-RAY PROTECT F/B	2.10V
10	N.C	N.C	-
11	HV-REG	HV-REG	3.54V
12	HV-DRIVE	HIGH VOLTAGE DRIVE	0.32V
13	H-DRIVE	H-DRIVE OUT	25V
14	GND	GND	GND
15	HEATER	HEATER INPUT	AC[0.7V]
16	N.C	N.C	-
17	208V	208V INPUT	208V
18	N.C	N.C	-
19	GND	GND	GND
20	V2	V2 INPUT	
21	N.C	N.C	-
22	N.C	N.C	-
23	D-FOCUS	DYNAMIC FOCUS OUT	-
24	N.C	N.C	-
25	N.C	N.C	-
26	SCREEN	SCREEN INPUT	1356V

4-9-8 CONV- MODULE

PIN NO.	ITEM	FUNCTION	OUT VOLT
1	SDA	D2	-
2	SCL	D1	-
3	GND	GND	GND
4	BV	BLUE VERTICAL OUT	-
5	BH	BLUE HORIZONTAL OUT	-
6	GV	GREEN VERTICAL OUT	-
7	GH	GREEN HORIZONTAL OUT	-
8	RV	RED VERTICAL OUT	-
9	RH	RED HORIZONTAL OUT	-
10	-5.4V	-5.4V INPUT	-5.4V
11	5.4V	5.4V INPUT	+5.4V
12	V-BLK	V-BLK INPUT	-
13	GND	GND	GND
14	H-BLK	H-BLK INPUT	0.52V
15	COMP	COMP VIDEO OUTPUT (N.C)	N.C
16	IR	INPUT REMOCON	3V
17	CTRL	CTRL (N.C)	N.C
18	D3/SEL	D3	0.2V
19	B	WHEN TEST PATTERN B OUT	-
20	G(TEST)	WHEN TEST PATTERN G OUT	-
21	R	WHEN TEST PATTERN R OUT	-
22	SYNC	SYNC OUTPUT	4.41V

4-9-9 TTX-MODULE

PIN NO.	ITEM	FUNCTION	OUT VOLT
1	H-SYNC	HOR. SYNC INPUT	3.6V
2	V-SYNC	VER. SYNC INPUT	3.6V
3	NC	N.C	-
4	GND	GND	GND
5	F/B-OUT	FAST BLANK OUT	0V/1.4V
6	B-OUT	B OUTPUT	1.8V/2.4V
7	G-OUT	G OUTPUT	1.8V/2.4V
8	R-OUT	R OUTPUT	1.8V/2.4V
9	GND	GND	GND
10	5V-D	5V-D INPUT	5V
11	GND	GND	GND
12	12V	12V INPUT	12V
13	GND	GND	GND
14	F/B-IN	EXT. FATS BLANK INPUT	-
15	B-IN	EXT. B-INPUT	0.6V
16	G-IN	EXT. G-INPUT	0.6V
17	R-IN	EXT. R-INPUT	0.6V
18	GND	GND	GND
19	CVBS-IN	CVBS INPUT	1.1V
20	SCL	SERAL CLOCK LINE	5V
21	SDA	SERIAL DATA LINE	5V

8. Block Diagrams

8-1 Main Signal

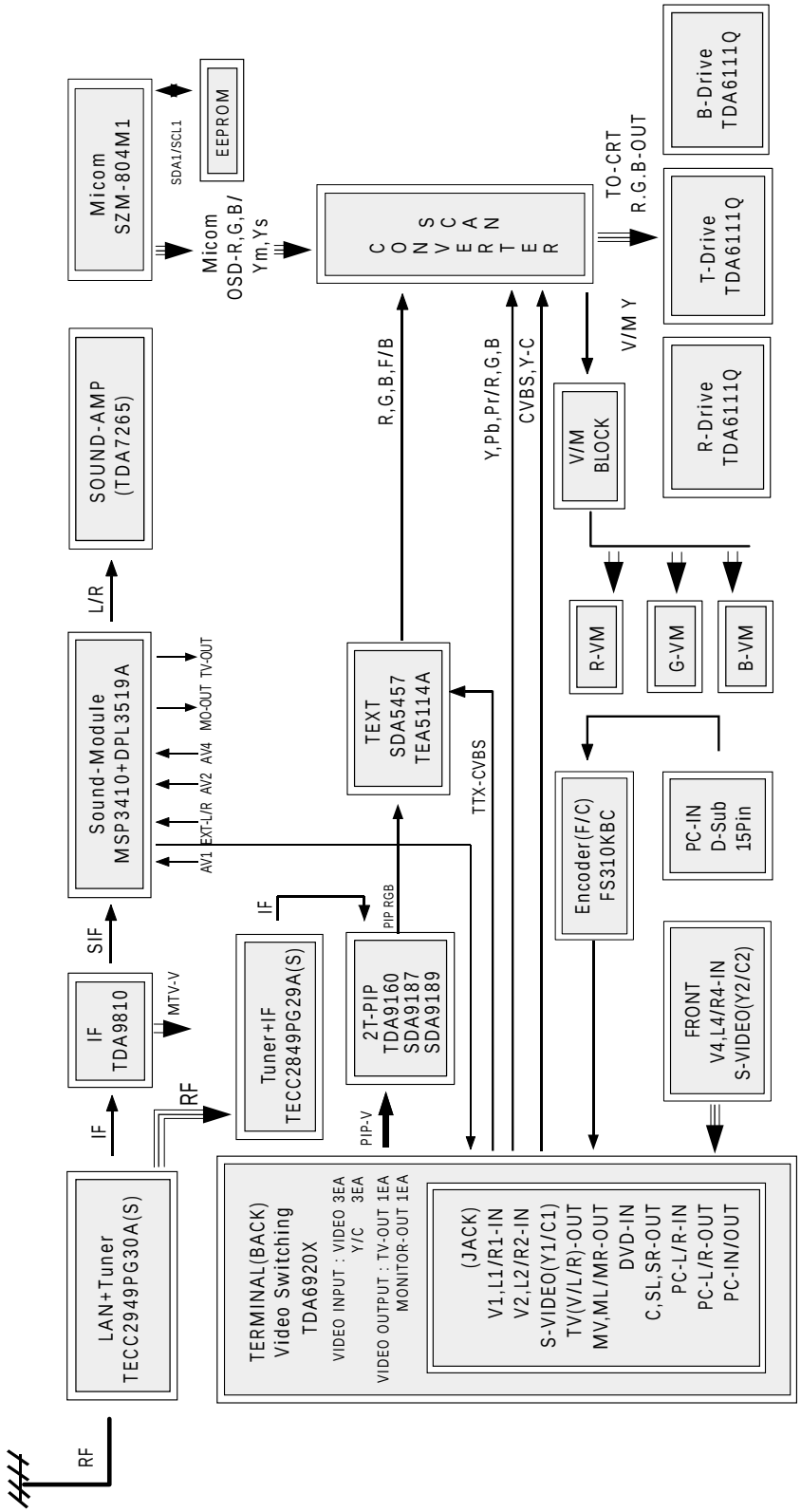

8-2 Video Signal

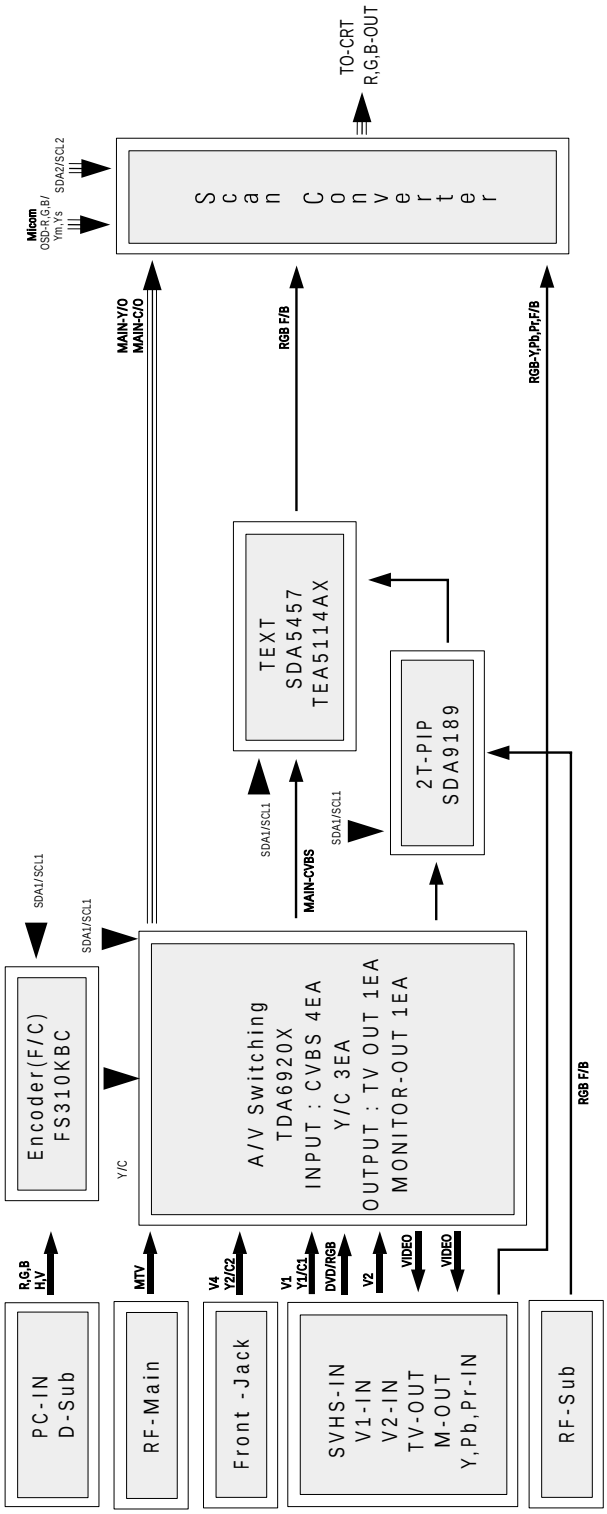

8-3 Sound Signal

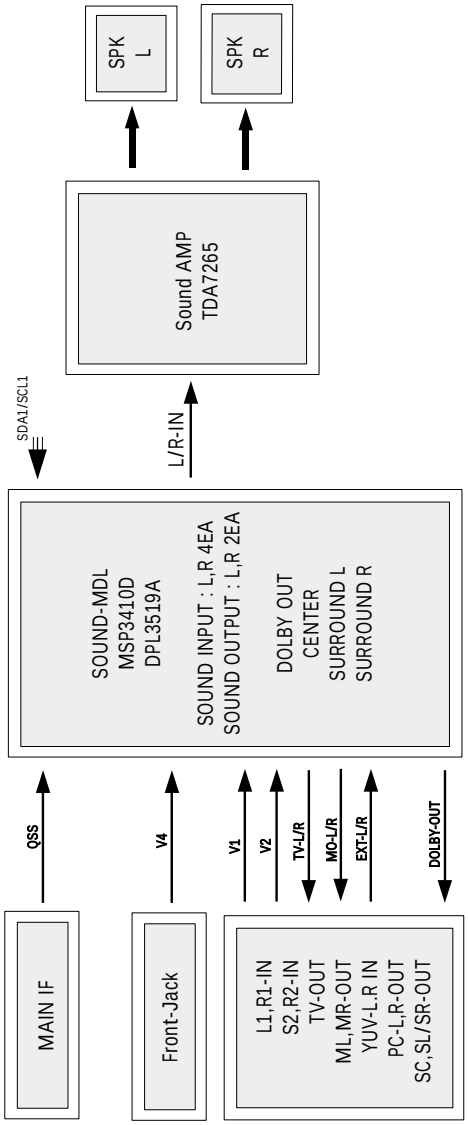

8-4 POWER SUPPLY

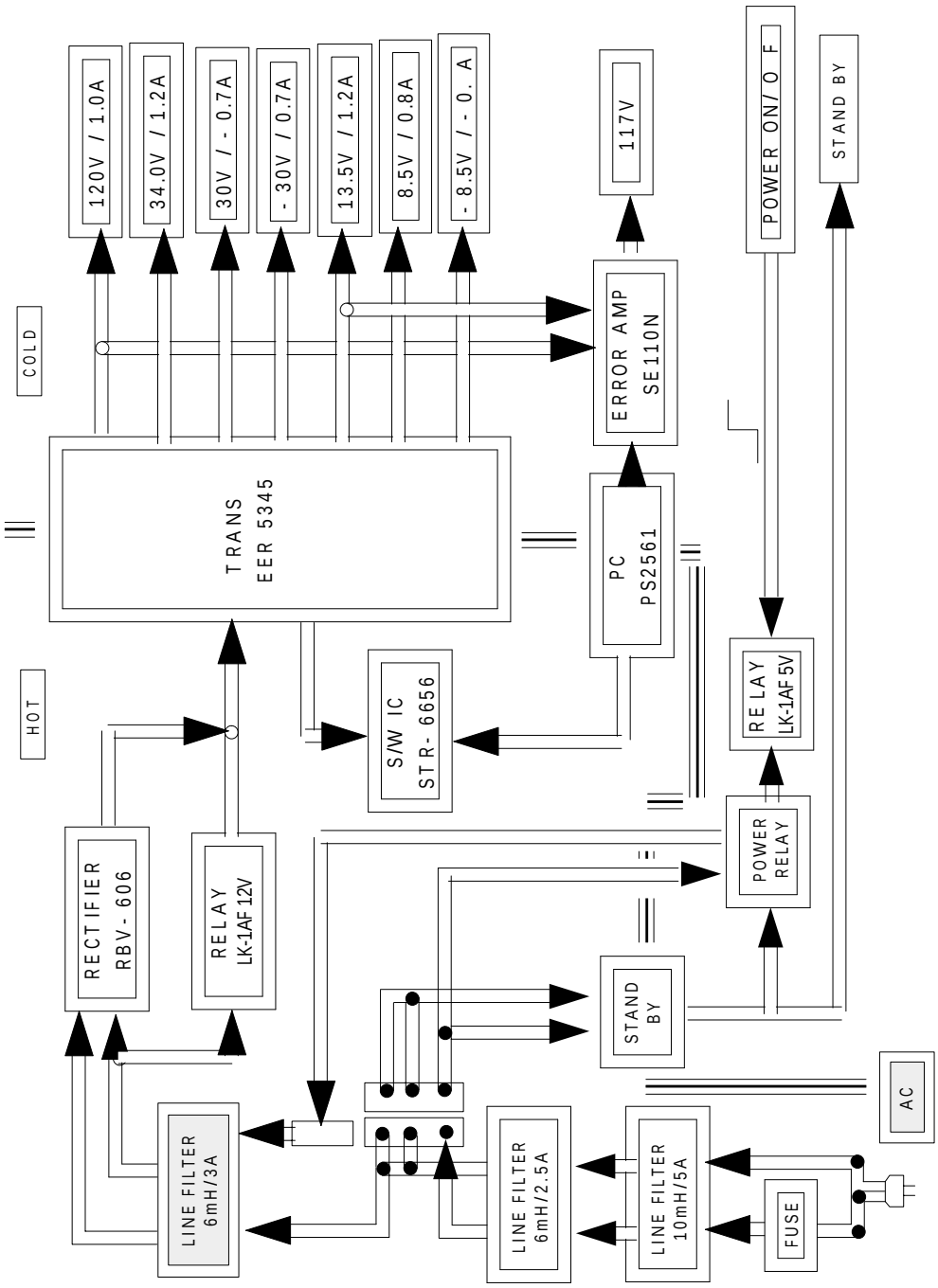

10. Schematic Diagrams

10-1 MAIN A

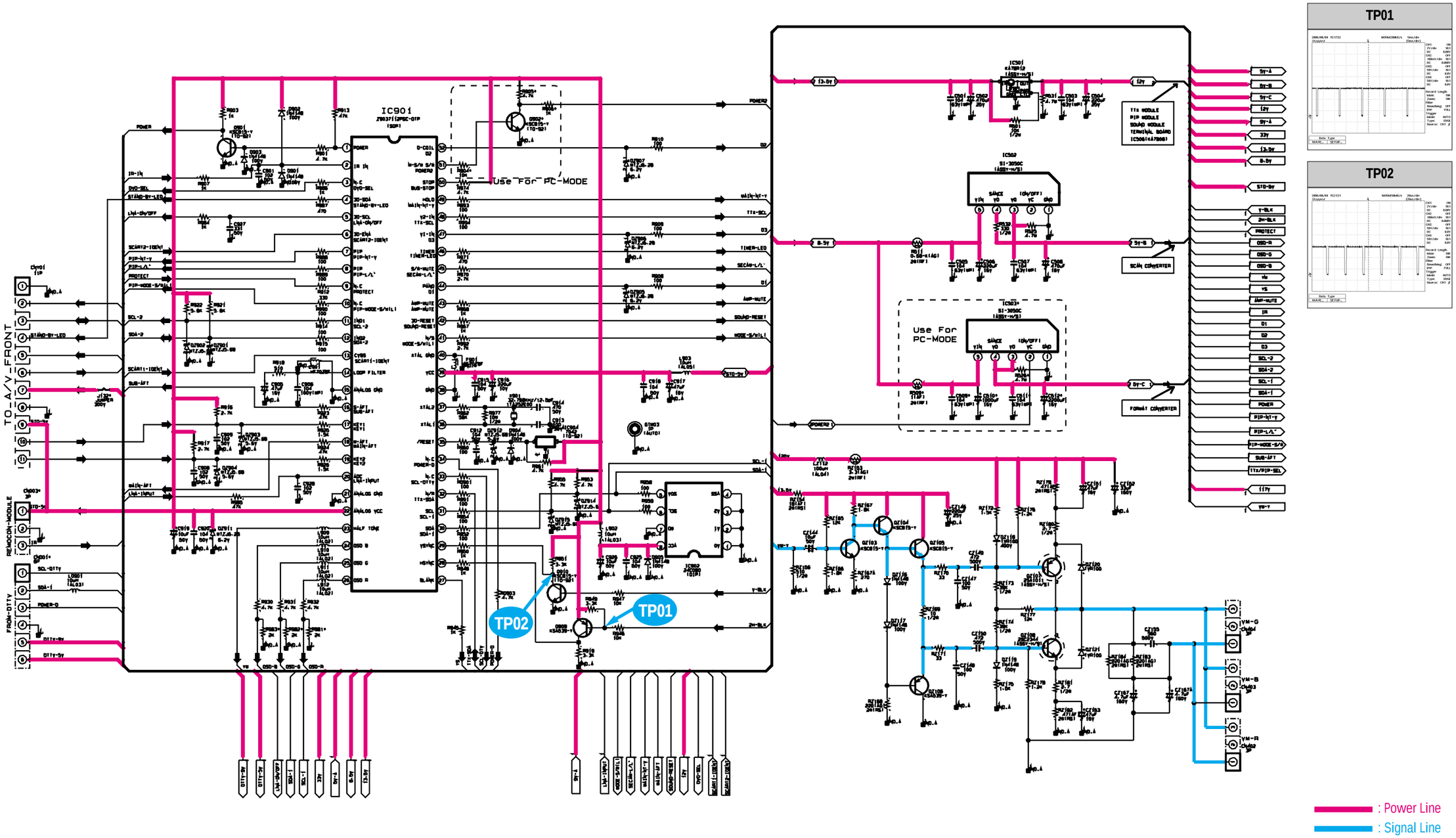

10-2 MAIN B

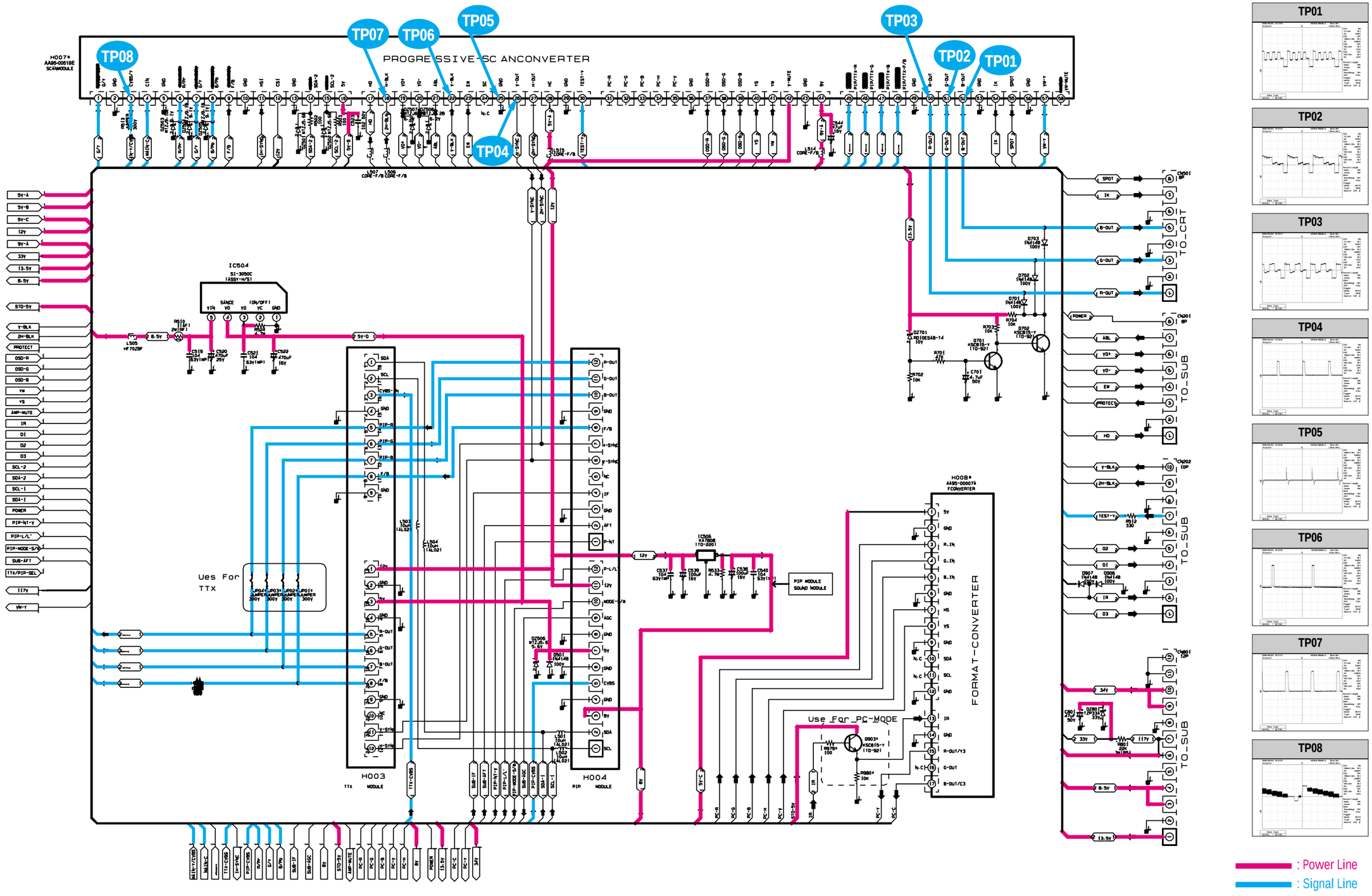
TP01
TP02
TP03
TP04
TP05
TP06
TP07
TP08
PROGRESSIVE-SC ANCONVERTER
H007*
AA05-00519E
SCANMODULE
IC504
S1-3050C
(ASSY-H/S)
Ues For
TTX
H003
TTX MODULE
H004
PIP MODULE
IC505
KA7808
(TO-220)
PIP MODULE
SOUND MODULE
H008*
AA05-00007A
FCONVERTER
FORMAT-CONVERTER
Use For PC-MODE
TO_CRT
TO_SUB
: Power Line
: Signal Line

10-3 MAIN C

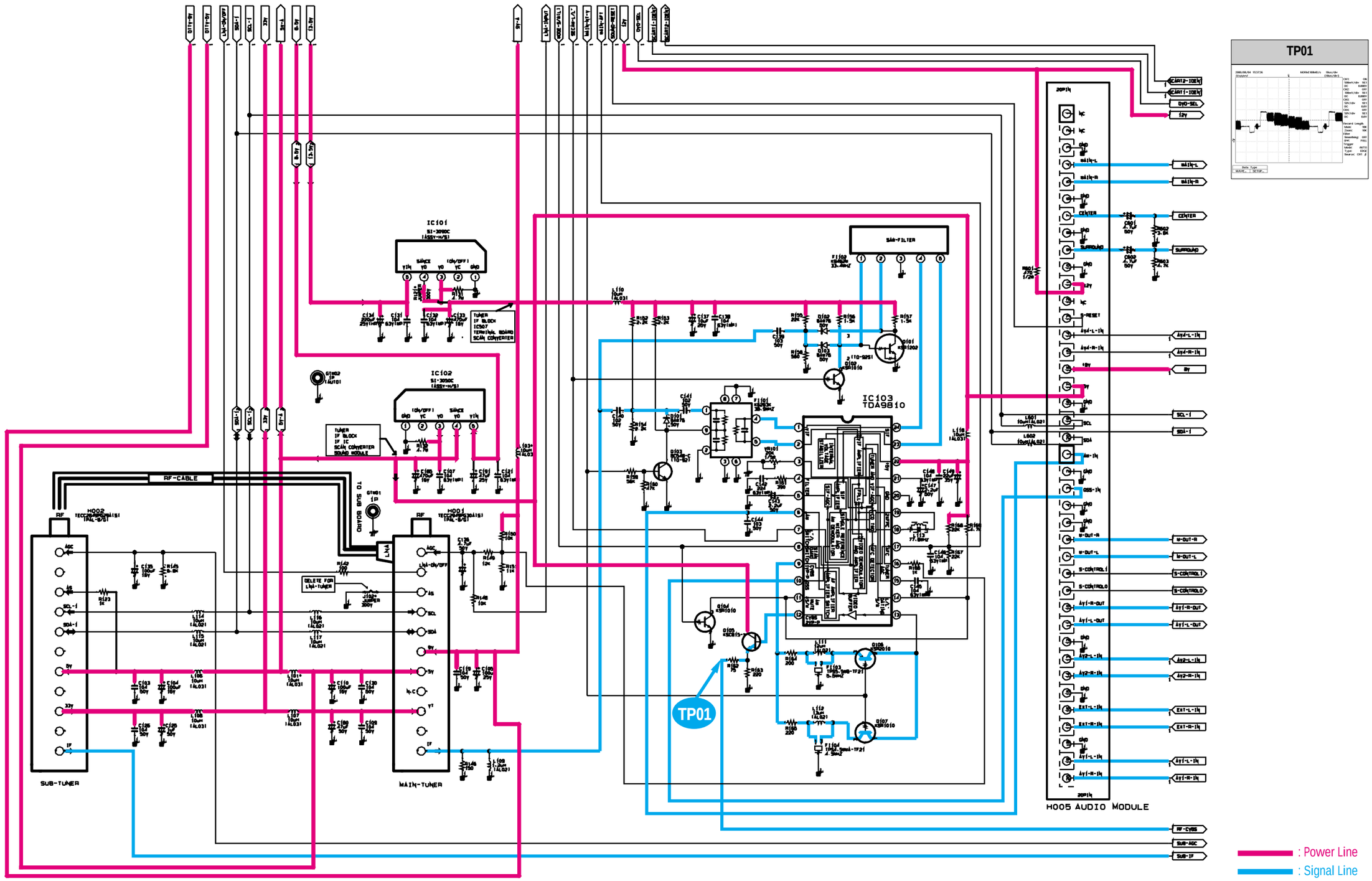
TP01
IC101
IC102
IC103
TDA9810
SAW-FILTER
TUNER IF BLOCK IC807 TERMINAL BOARD SCAN CONVERTER
TUNER IF BLOCK IF IC SCAN CONVERTER SOUND MODULE
RF-CABLE
TO SUB BOARD
DELETE FOR LNA-TUNER
SUB-TUNER
MAIN-TUNER
H005 AUDIO MODULE
20PIN
CENTER
SURROUND
: Power Line
: Signal Line

10-4 MAIN D

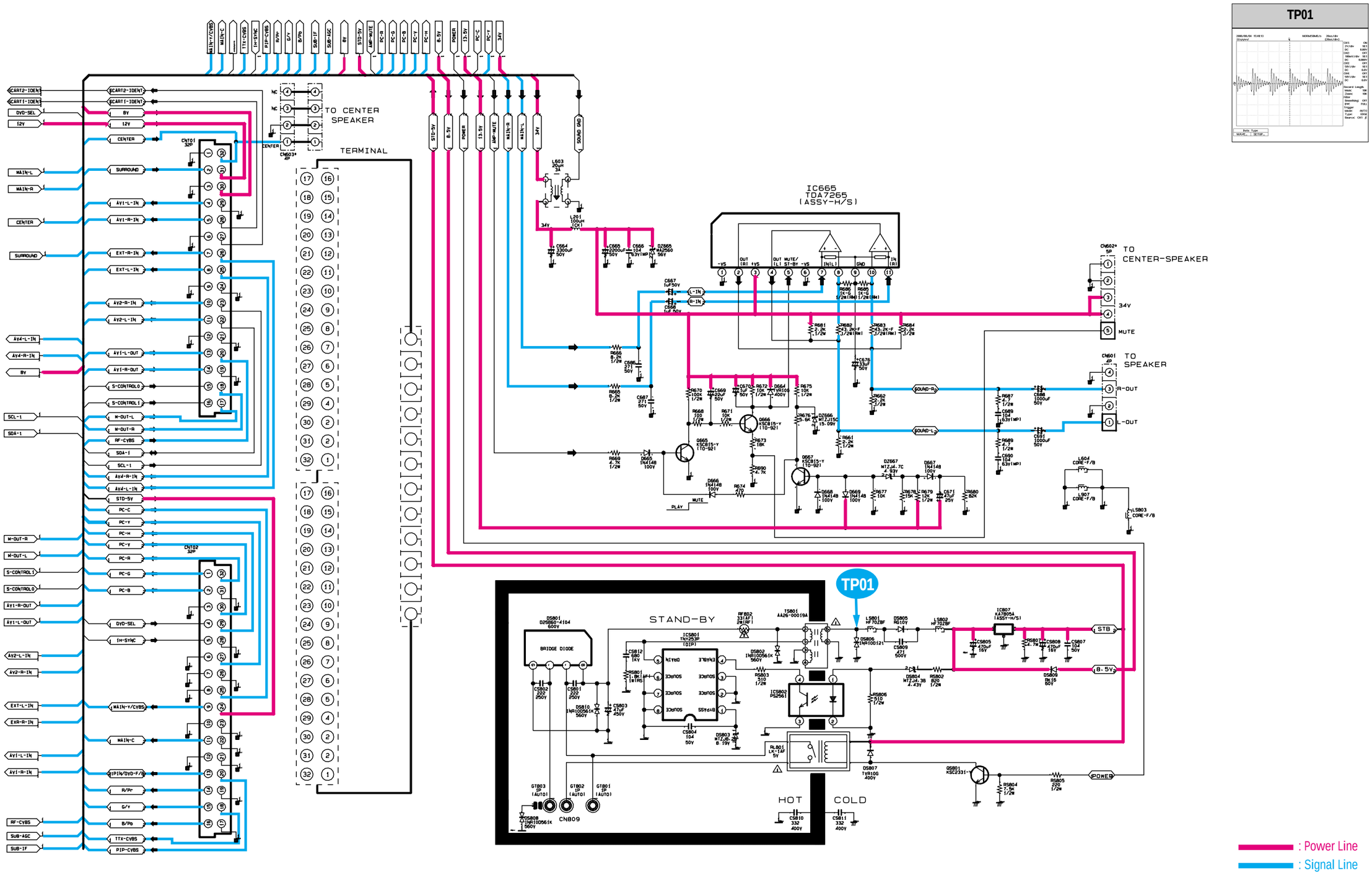
TP01
TO CENTER SPEAKER
TERMINAL
IC665
TDA7265
(ASSY-H/S)
TO CENTER-SPEAKER
TO SPEAKER
STAND-BY
HOT
COLD
: Power Line
: Signal Line

10-5 SCAN-MODULE 1/3

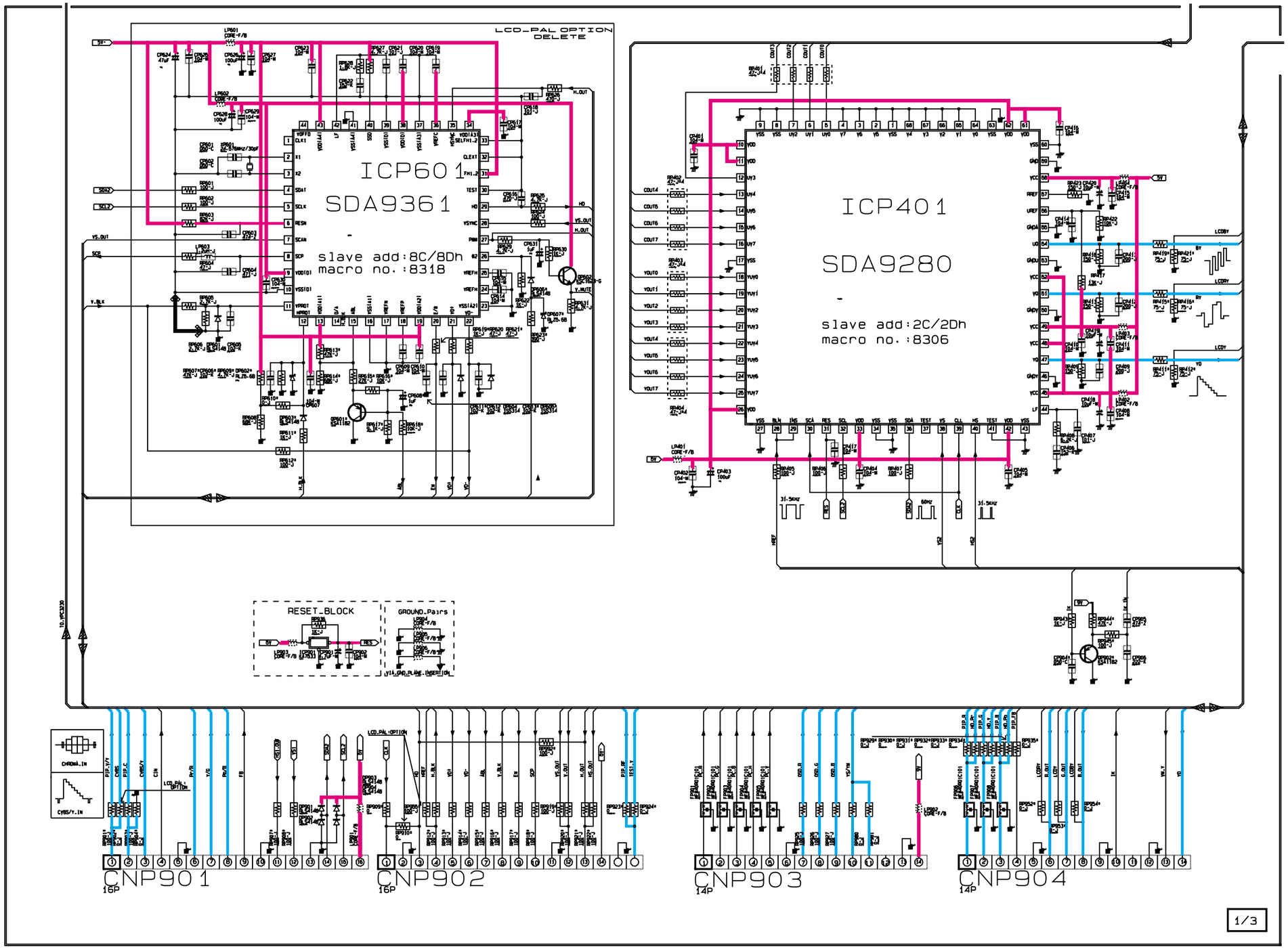

: Power Line

: Signal Line

10-6 SCAN-MODULE 2/3

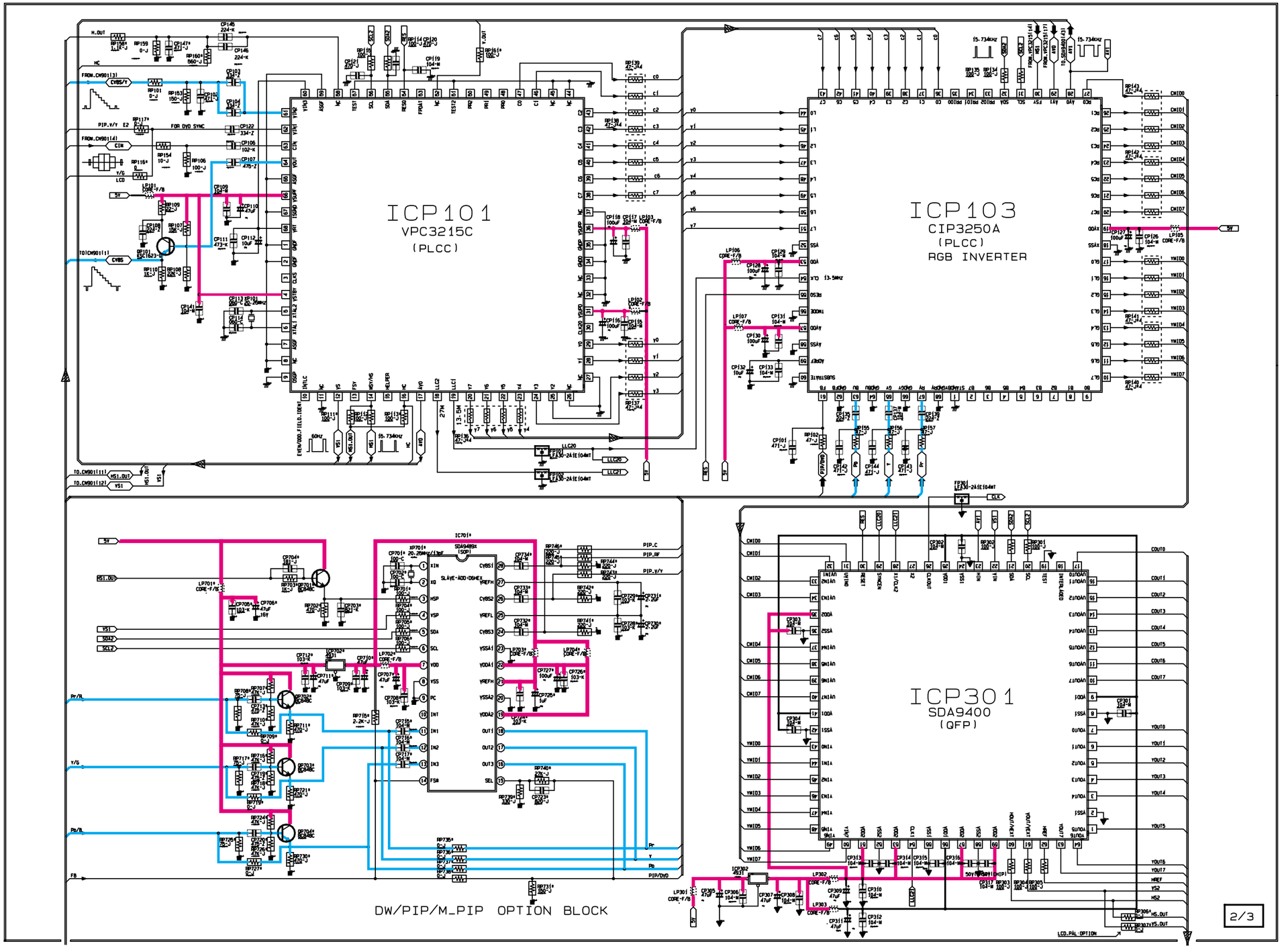

10-7 SCAN-MODULE 3/3

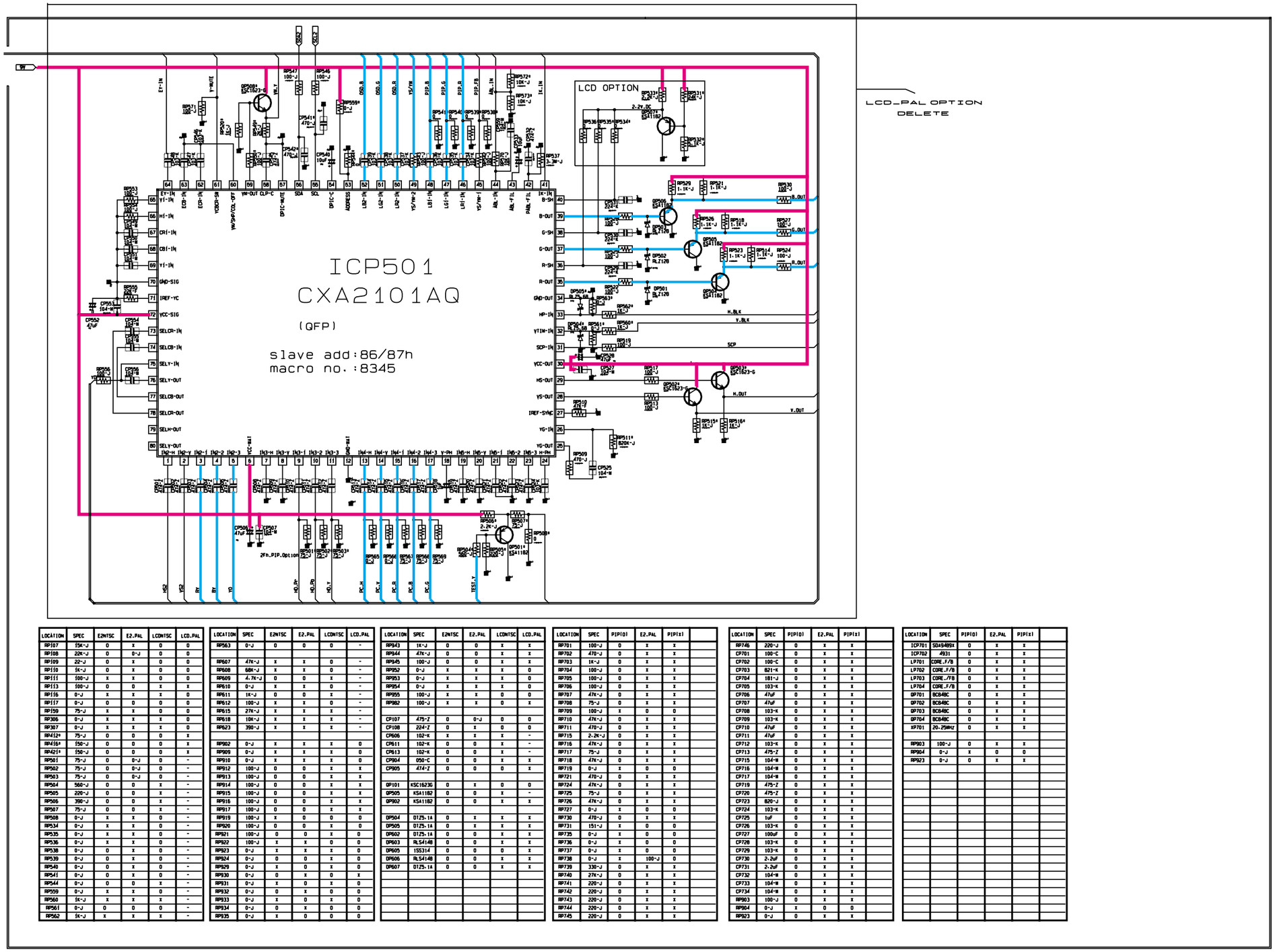

LOCATION	SPEC	E2NTSC	E2.PAL	LCDNTSC	LCD.PAL
RP107	15K-J	0	x	0	0
RP108	22K-J	0	0-J	0	0
RP109	22-J	0	x	0	0
RP110	1K-J	0	x	0	0
RP111	100-J	x	x	0	0
RP113	100-J	0	0	x	x
RP116	0-J	x	x	x	0
RP117	0-J	0	0	0	0
RP159	75-J	x	x	0	0
RP306	0-J	x	x	x	0
RP307	0-J	x	x	x	0
RP412*	75-J	0	0	0	x
RP416*	150-J	0	0	0	x
RP421*	150-J	0	0	0	x
RP501	75-J	0	0-J	0	-
RP502	75-J	0	0-J	0	-
RP503	75-J	0	0-J	0	-
RP504	560-J	0	0	x	-
RP505	220-J	0	0	x	-
RP506	390-J	0	0	x	-
RP507	75-J	0	0	x	-
RP508	0-J	x	x	0	-
RP534	0-J	x	x	0	-
RP535	0-J	x	x	0	-
RP536	0-J	x	x	0	-
RP538	0-J	0	x	0	-
RP539	0-J	0	x	0	-
RP540	0-J	0	x	0	-
RP541	0-J	0	x	0	-
RP544	0-J	0	x	x	-
RP559	0-J	x	x	0	-
RP560	1K-J	x	x	x	-
RP561	0-J	0	0	0	-
RP562	1K-J	x	x	x	-

LOCATION	SPEC	E2NTSC	E2.PAL	LCDNTSC	LCD.PAL
RP563	0-J	0	0	0	-
RP607	47K-J	x	x	0	-
RP608	68K-J	x	x	0	-
RP609	4.7K-J	0	0	x	-
RP610	0-J	x	x	0	-
RP611	1K-J	0	0	x	-
RP612	100-J	x	x	0	-
RP615	27K-J	x	x	x	-
RP618	10K-J	x	x	x	-
RP623	390-J	x	x	x	-
RP902	0-J	x	x	x	0
RP909	0-J	x	x	x	0
RP910	0-J	x	x	x	0
RP912	100-J	0	0	x	x
RP913	100-J	0	0	x	x
RP914	100-J	0	0	x	x
RP915	100-J	0	0	x	x
RP916	100-J	0	0	x	x
RP917	100-J	0	0	x	x
RP919	100-J	x	0	0	0
RP920	100-J	0	0	x	0
RP921	100-J	0	0	x	0
RP922	100-J	x	x	0	0
RP923	0-J	x	x	x	0
RP924	0-J	0	0	x	0
RP929	0-J	x	0	x	0
RP930	0-J	0	x	0	x
RP931	0-J	x	0	x	0
RP932	0-J	0	x	0	0
RP933	0-J	x	0	x	0
RP934	0-J	0	x	0	0
RP935	0-J	x	0	0	0

LOCATION	SPEC	E2NTSC	E2.PAL	LCDNTSC	LCD.PAL
RP943	1K-J	0	0	x	x
RP944	47K-J	0	0	x	x
RP945	100-J	0	0	x	x
RP952	0-J	x	x	x	0
RP953	0-J	x	x	x	0
RP954	0-J	x	x	x	0
RP955	100-J	x	x	0	0
RP982	100-J	x	x	0	x
CP107	475-Z	0	0-J	0	0
CP108	224-Z	0	x	0	0
CP606	102-K	x	x	x	-
CP611	102-K	0	0	x	-
CP613	102-K	0	0	x	-
CP904	050-C	0	0	x	x
CP905	474-Z	0	0	0	x
QP101	KSC1623G	0	x	0	0
QP505	KSA1182	0	0	x	-
QP902	KSA1182	0	0	x	x
DP504	D1Z5.1A	0	x	x	x
DP505	D1Z5.1A	0	x	x	x
DP602	D1Z5.1A	0	0	x	x
DP603	RLS414B	0	0	x	x
DP605	1SS314	0	0	0	x
DP606	RLS414B	0	0	x	x
DP607	D1Z5.1A	0	0	x	x

LOCATION	SPEC	P|P(O)	E2.PAL	P|P(X)
RP701	100-J	0	x	x
RP702	470-J	0	x	x
RP703	1K-J	0	x	x
RP704	100-J	0	x	x
RP705	100-J	0	x	x
RP706	100-J	0	x	x
RP707	47K-J	0	x	x
RP708	75-J	0	x	x
RP709	100-J	x	0	0
RP710	47K-J	0	x	x
RP711	470-J	0	x	x
RP715	2.2K-J	0	x	x
RP716	47K-J	0	x	x
RP717	75-J	0	x	x
RP718	47K-J	0	x	x
RP719	0-J	x	0	0
RP721	470-J	0	x	x
RP724	47K-J	0	x	x
RP725	75-J	0	x	x
RP726	47K-J	0	x	x
RP727	0-J	x	0	0
RP730	470-J	0	x	x
RP731	151-J	x	0	0
RP735	0-J	x	0	0
RP736	0-J	x	0	0
RP737	0-J	x	0	0
RP738	0-J	x	100-J	0
RP739	330-J	0	x	x
RP740	27K-J	0	x	x
RP741	220-J	0	x	x
RP742	220-J	0	x	x
RP743	220-J	0	x	x
RP744	220-J	0	x	x
RP745	220-J	0	x	x

LOCATION	SPEC	P|P(O)	E2.PAL	P|P(X)
RP746	220-J	0	x	x
CP701	100-C	0	x	x
CP702	100-C	0	x	x
CP703	821-K	0	x	x
CP704	181-J	0	x	x
CP705	103-K	0	x	x
CP706	47uF	0	x	x
CP707	47uF	0	x	x
CP708	103-K	0	x	x
CP709	103-K	0	x	x
CP710	47uF	0	x	x
CP711	47uF	0	x	x
CP712	103-K	0	x	x
CP713	475-Z	0	x	x
CP715	104-M	0	x	x
CP716	104-M	0	x	x
CP717	104-M	0	x	x
CP719	475-Z	0	x	x
CP720	475-Z	0	x	x
CP723	820-J	0	x	x
CP724	103-K	0	x	x
CP725	1uF	0	x	x
CP726	103-K	0	x	x
CP727	100uF	0	x	x
CP728	103-K	0	x	x
CP729	103-K	0	x	x
CP730	2.2uF	0	x	x
CP731	2.2uF	0	x	x
CP732	104-M	0	x	x
CP733	104-M	0	x	x
CP734	104-M	0	x	x
RP903	100-J	0	x	x
RP904	0-J	x	0	0
RP923	0-J	0	x	x

LOCATION	SPEC	P|P(O)	E2.PAL	P|P(X)
ICP701	SDA9489X	0	x	x
ICP702	4931	0	x	x
LP701	CORE.F/B	0	x	x
LP702	CORE.F/B	0	x	x
LP703	CORE.F/B	0	x	x
LP704	CORE.F/B	0	x	x
QP701	BC848C	0	x	x
QP702	BC848C	0	x	x
QP703	BC848C	0	x	x
QP704	BC848C	0	x	x
XP701	20.25MHz	0	x	x
RP903	100-J	0	x	x
RP904	0-J	x	0	0
RP923	0-J	0	x	x

10-8 A/V TERMINAL

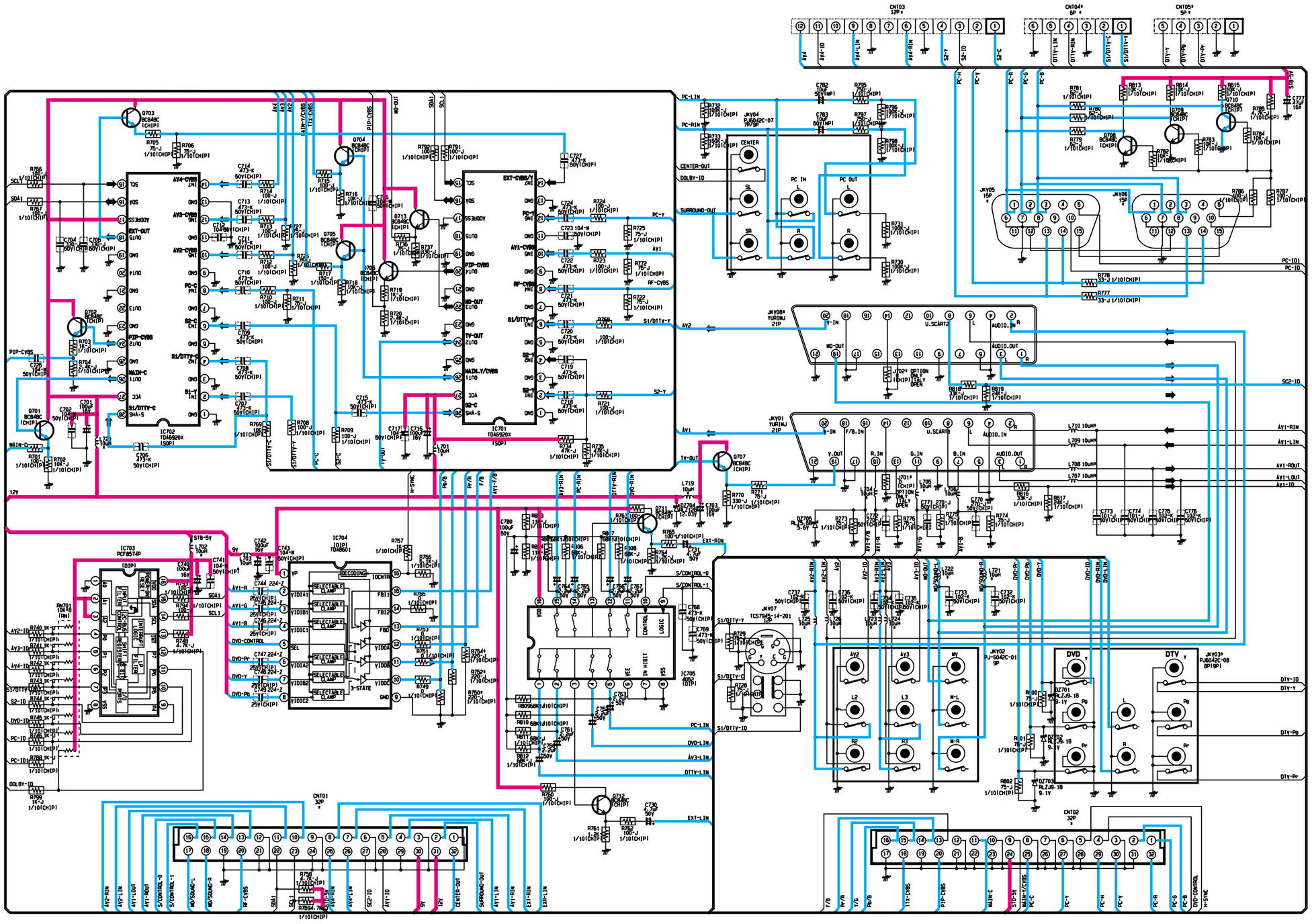

10-9 SOUND-MODULE

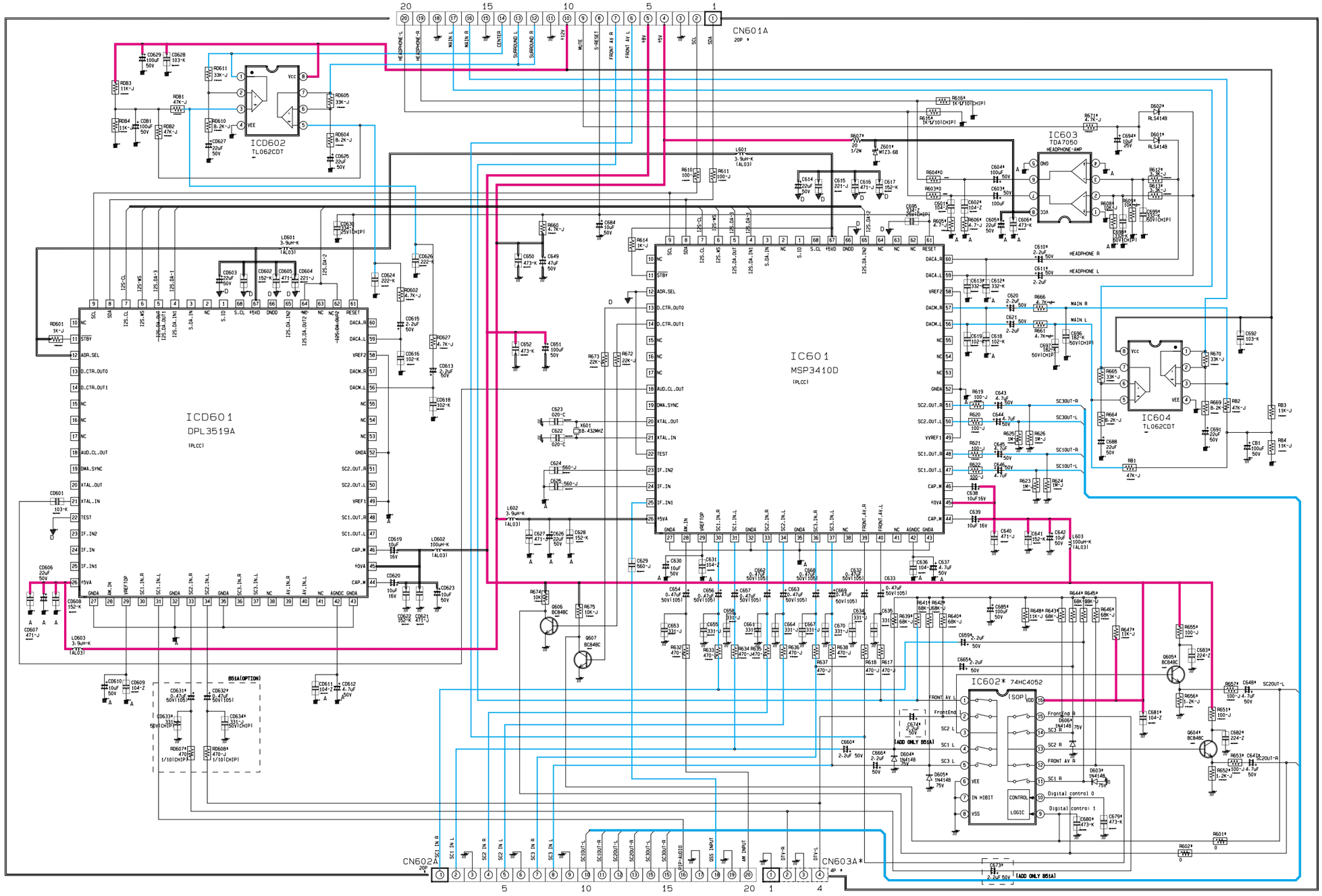

10-10 PIP

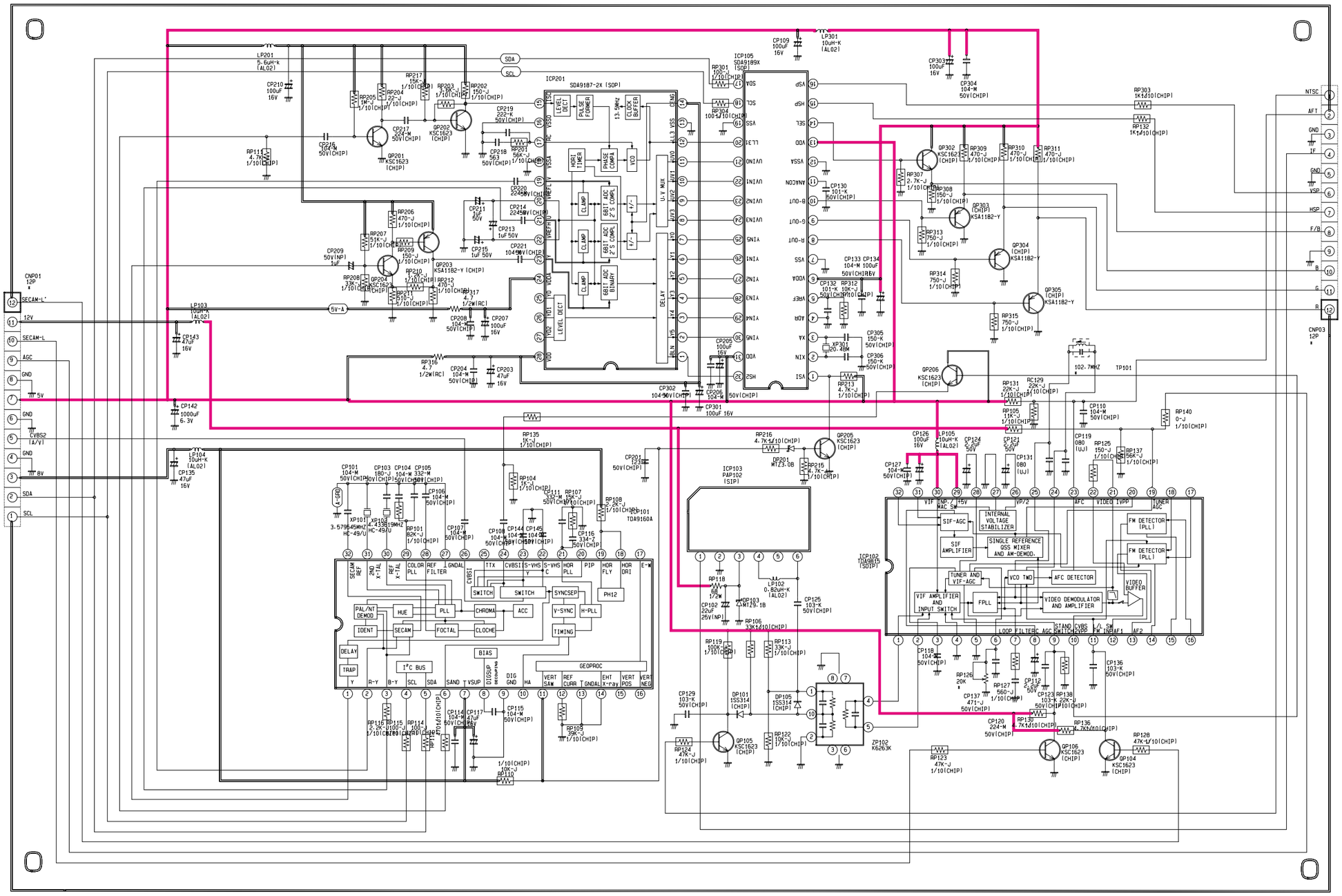
ICP201
SDA9187-2X (SOP)
ICP105
SDA9189X
ICP103
PAP102
(SIP)
ICP102
TDA9160A
(SDIP)
ZP101
TDA9160A
ZP102
K6263K
CNP01
12P
CNP03
12P
SECAM-L'
12V
SECAM-L
AGC
GND
5V
CVBS2
(A/V)
8V
SDA
SCL
NTSC
AFT
IF
VSP
HSP
F/B
B
G
R
TP101
102.7MHZ
VIF INP.
MAC SW
+5V
VP/2
AFC
VIDEO IVPP
TUNER AGC
SIF-AGC
INTERNAL VOLTAGE STABILIZER
SIF AMPLIFIER
SINGLE REFERENCE QSS MIXER AND AM-DEMOD.
FM DETECTOR (PLL)
TUNER AND VIF-AGC
VCO IND
AFC DETECTOR
VIF AMPLIFIER AND INPUT SWITCH
FPLL
VIDEO DEMODULATOR AND AMPLIFIER
VIDEO BUFFER
LOOP FILTER
AGC SWITCH
STAND CVBS
FM INP.
AF1
AF2
SECAM REF
2ND X-TAL
REF X-TAL
COLOR PLL
REF FILTER
GNDAL
CVBS1
TTX
CVBS1
S-VHS Y
S-VHS C
HOR PLL
PIP
HOR FLY
HOR DRI
E-W
SWITCH
SYNCSEP
PH12
PAL/NT DEMOD
HUE
PLL
CHROMA
ACC
V-SYNC
H-PLL
IDENT
SECAM
FOCTAL
CLOCHE
TIMING
DELAY
TRAP
I²C BUS
BIAS
GEOPROC
Y
R-Y
B-Y
SCL
SDA
SAND
VSUP
DIGSUP
DIG GND
HA
VERT SAW
REF CURR
GNDAL
EHT X-ray
VERT POS
VERT NEG
: Power Line
: Signal Line

10-11 FORMAT-CONVERTER

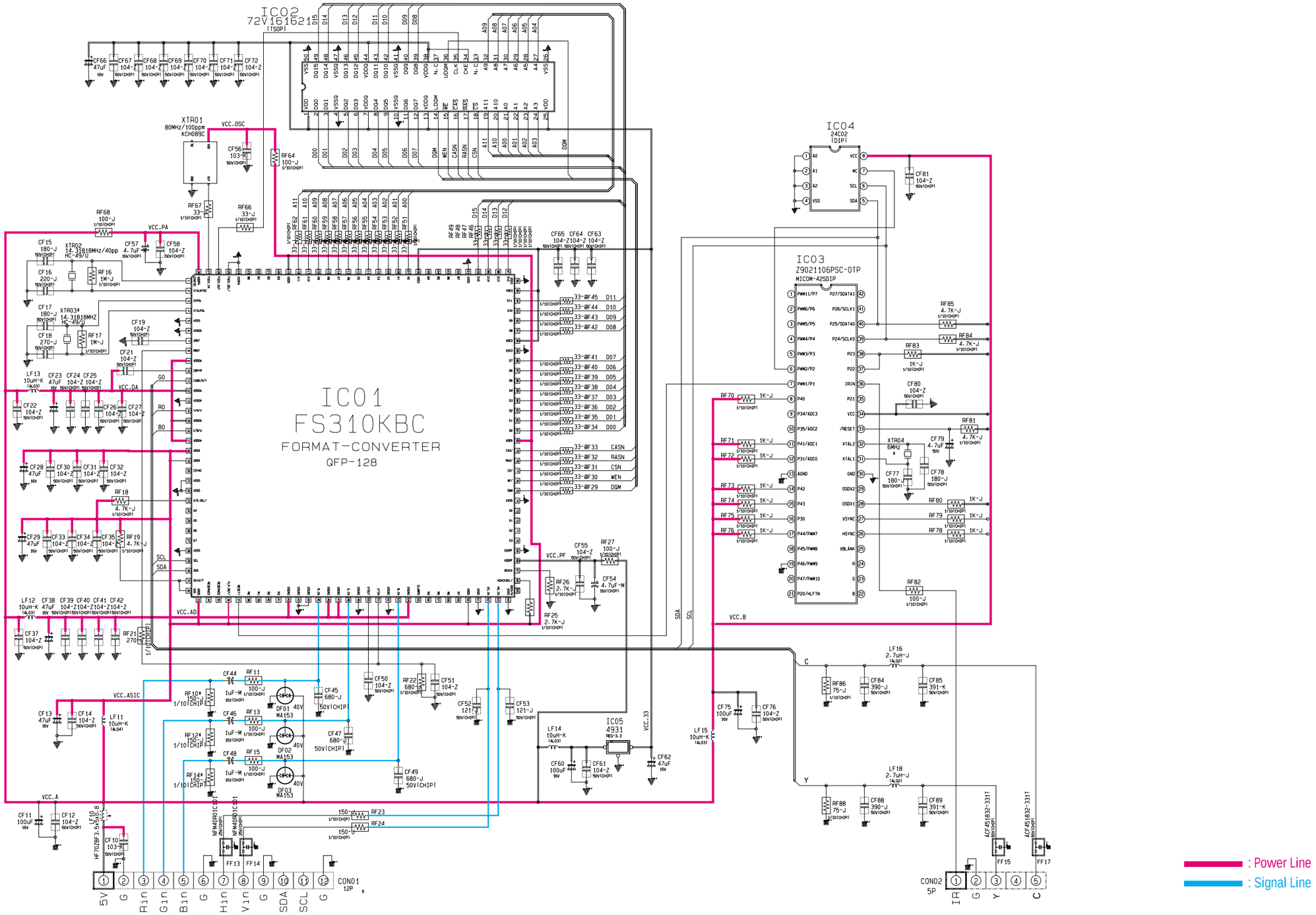

10-12 TTX

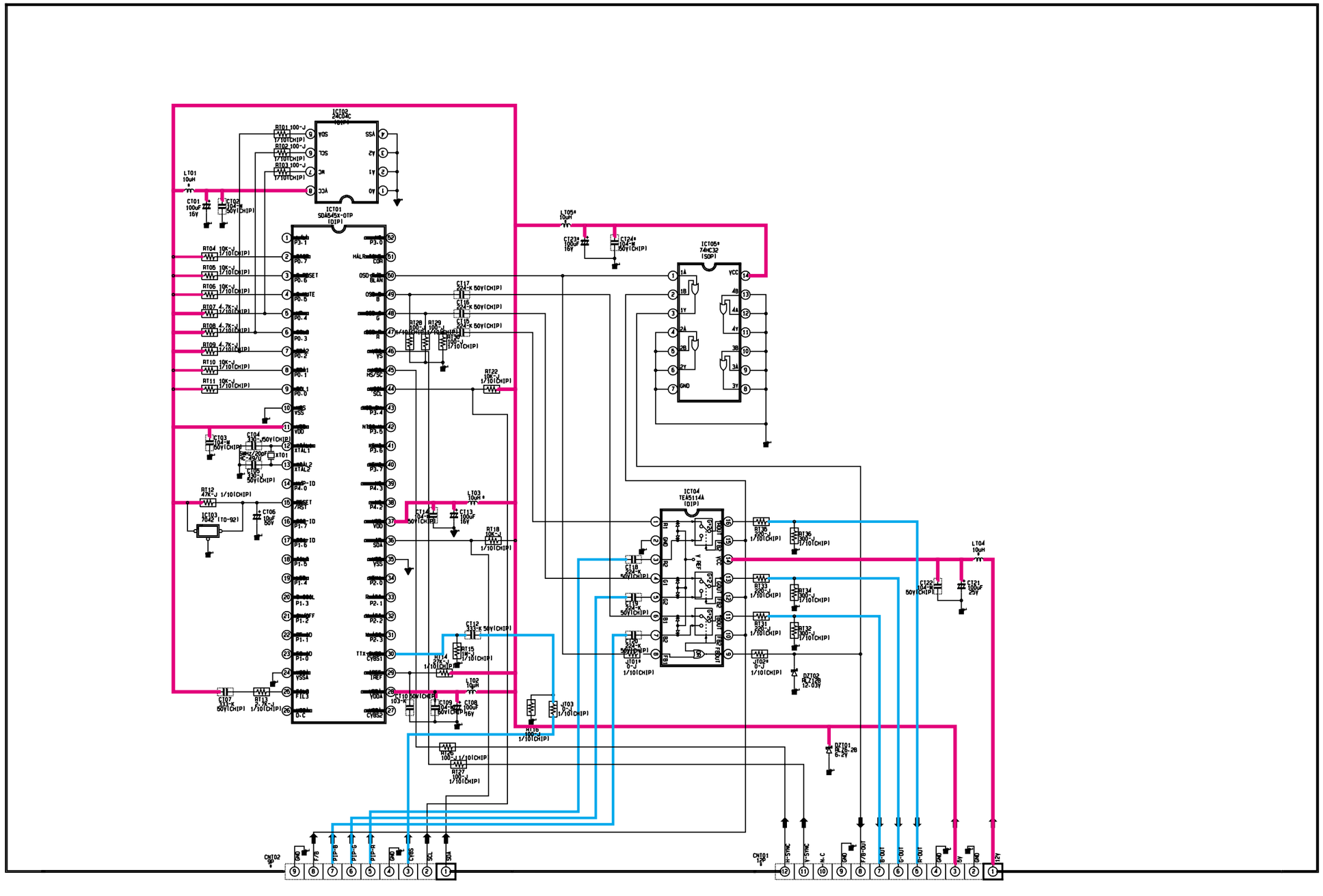

10-13 SUB(POWER+DEFL)-1

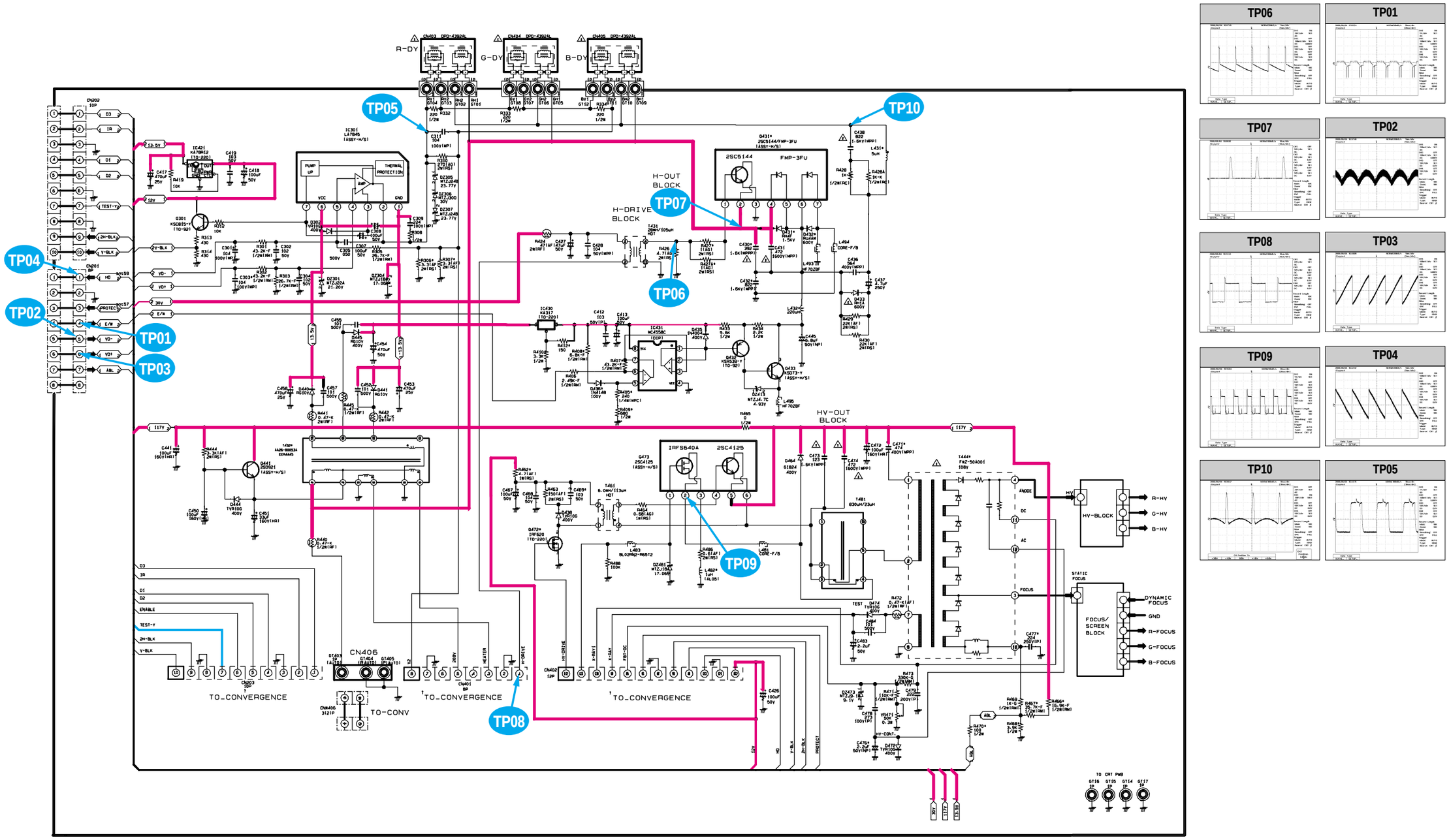

10-14 SUB(POWER+DEFL)-2

LOC	FREE VOLT	ONLY 220V
C812	2200uF·250V	580uF·450V
C813	2200uF·250V	DELETE
C835	22uF·25V	DELETE
C842	47uF·450V	DELETE
D805	TVR10G	DELETE
D839	RC2V1	DELETE
D842	TVR10G	DELETE
DZ833	P6KE180A	DELETE
DZ837	1N4762	DELETE
DZ840	MA2560	DELETE
DZ841	R2K	DELETE
IC802	SVD001	DELETE
J172	DELETE	JUMPER

LOC	FREE VOLT	ONLY 220V
J176	DELETE	JUMPER
L801	1mH·5A	6mH·2.5A
L803	1mH·5A	6mH·3A
R808A	JUMPER	200K·1/2W
R809	200K·1/2W	DELETE
R816	DELETE	10K·1/2W
R833	150·2W	DELETE
R835	8.2K·1/2W	DELETE
R842	47K·2W	DELETE
R842A	47K·2W	DELETE
R844	91K·2W	DELETE
R845	91K·2W	DELETE
R846	56K·2W	DELETE

LOC	FREE VOLT	ONLY 220V
R847	56K·2W	DELETE
R848	240K·1/2W	DELETE
R850	4.7·2W(RF)	DELETE
RL802	LK-1AF·12V	DELETE

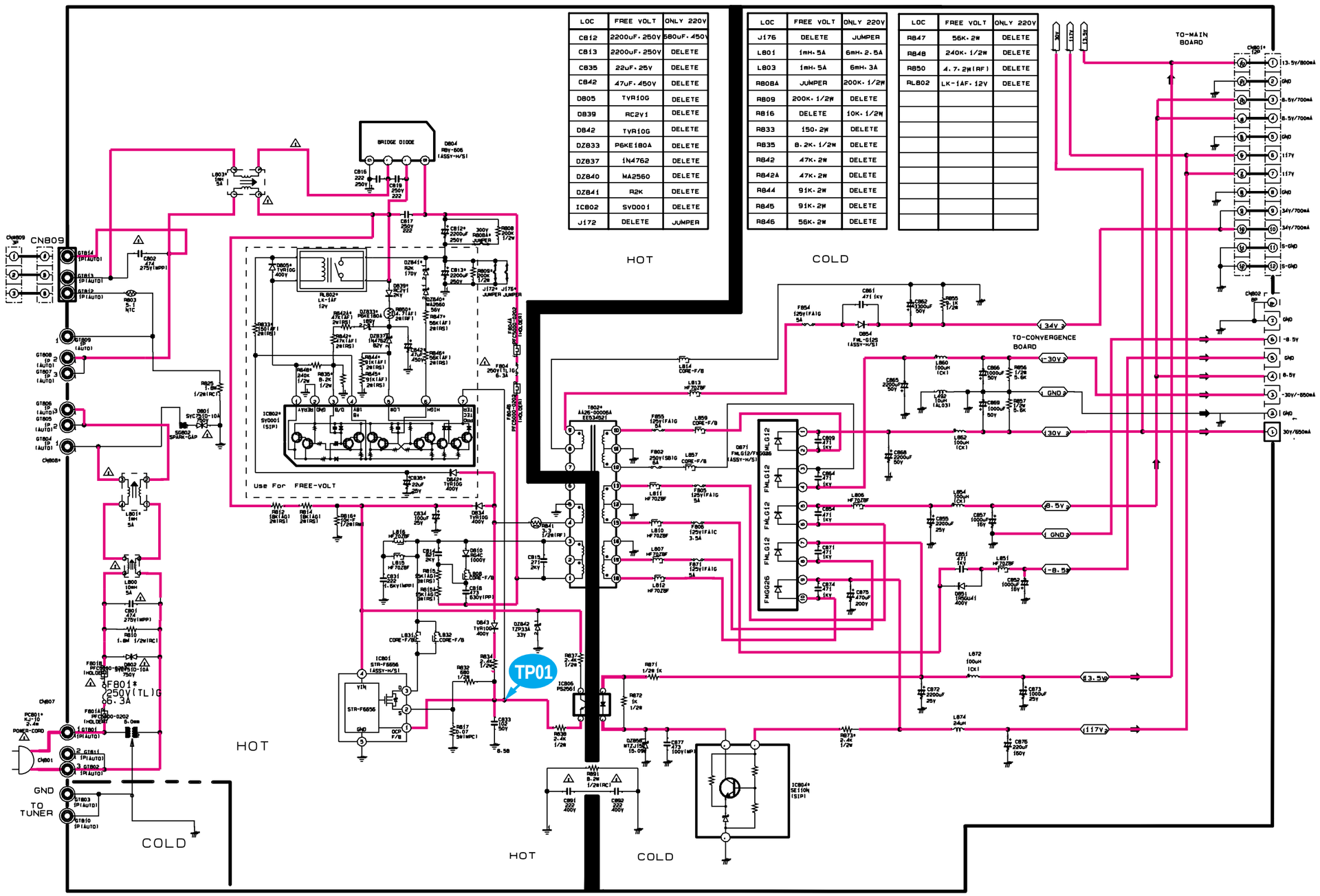

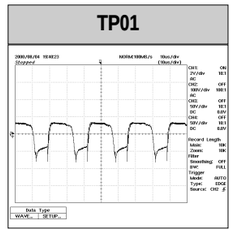

: Power Line
: Signal Line

10-15 CONVERGENCE

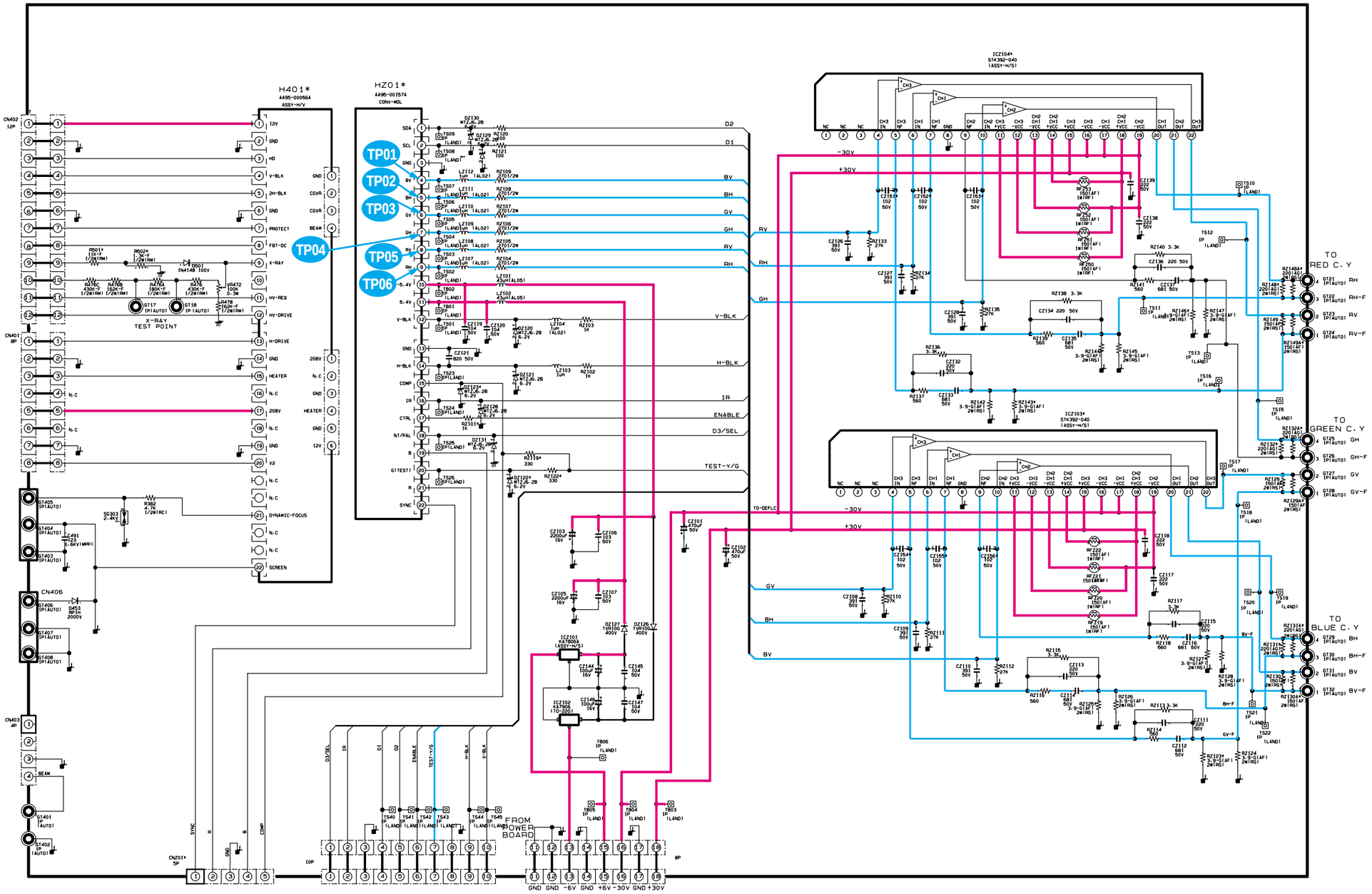

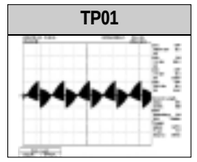

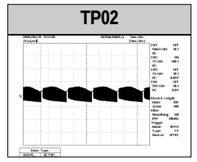

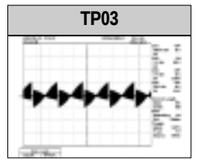

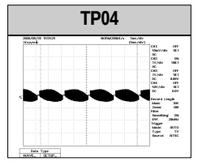

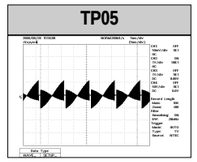

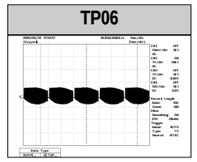

: Power Line
: Signal Line

10-16 HV-MODULE

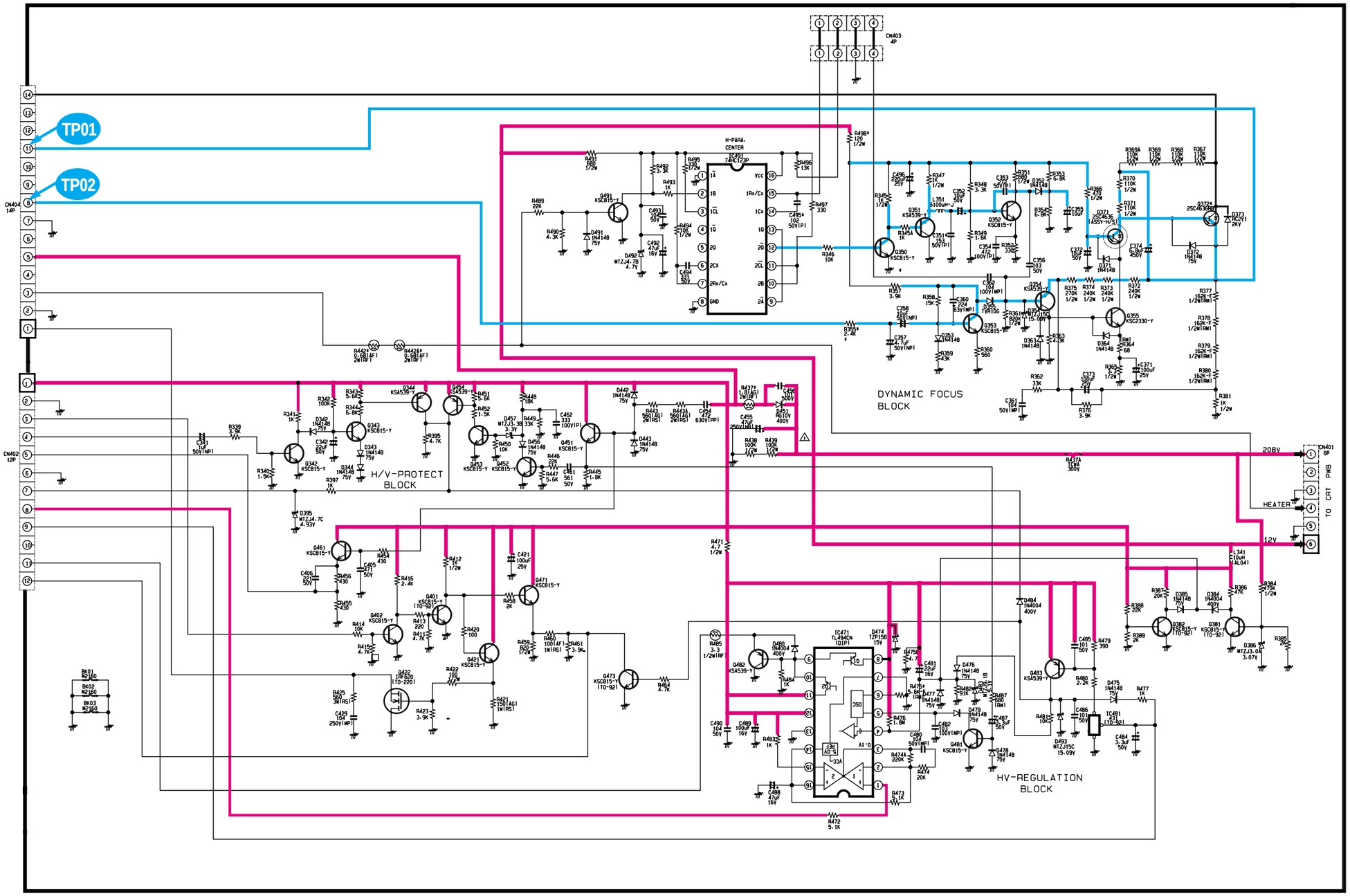

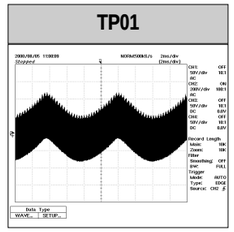

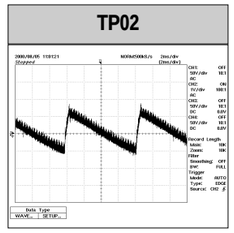

: Power Line
: Signal Line

10-17 CONVERGENCE MODULE

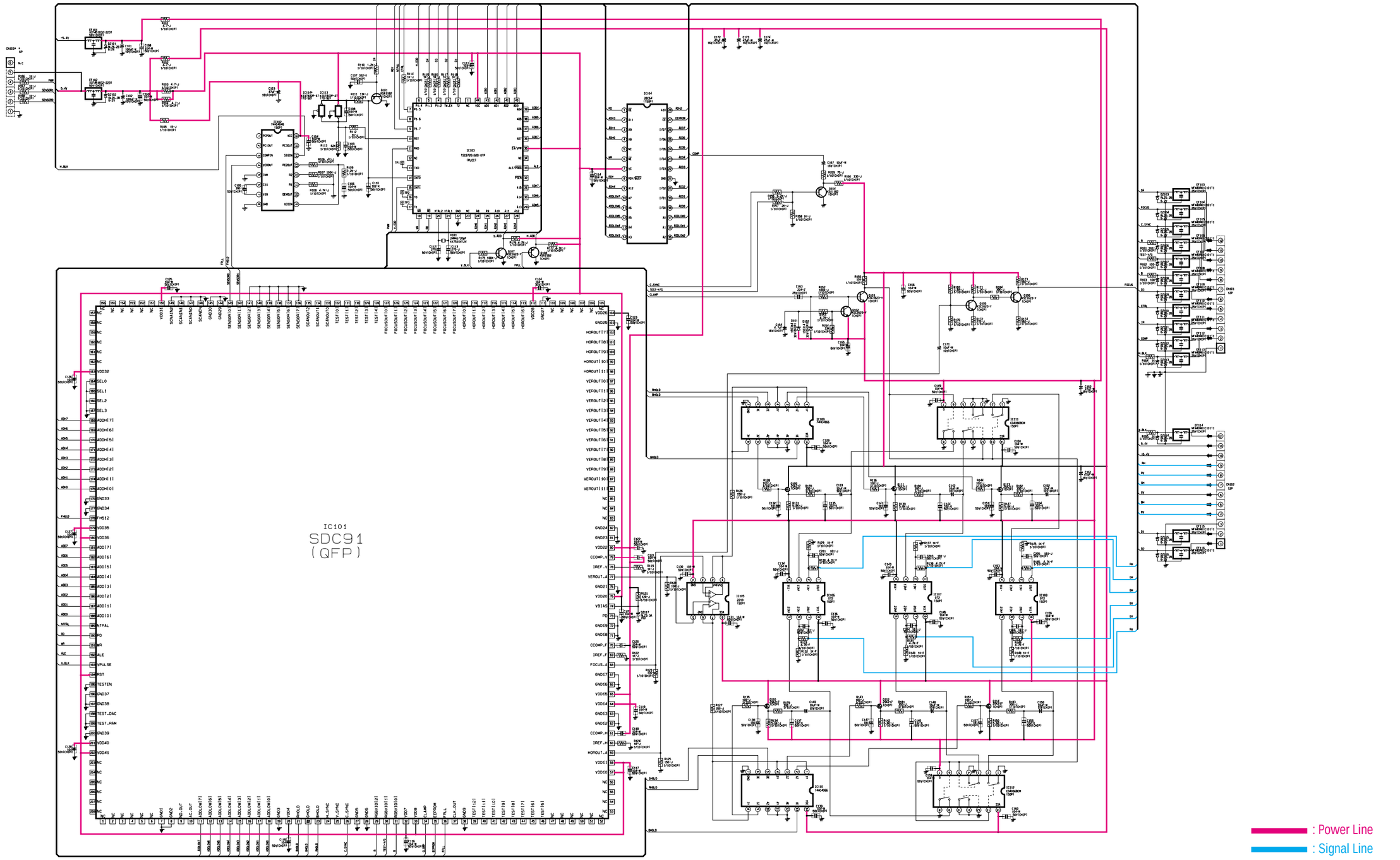

10-18 CRT

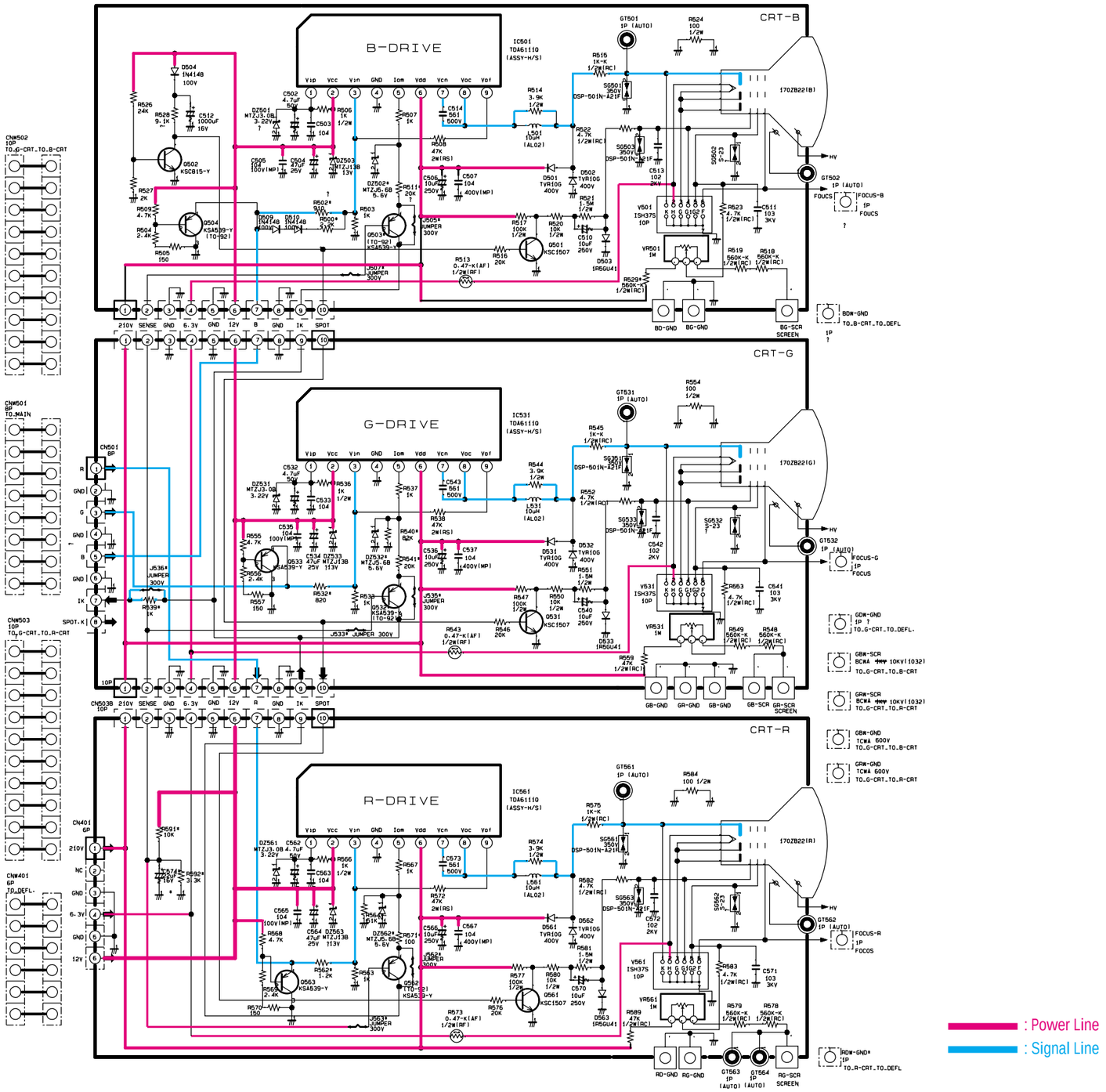

10-19 PCB-CONTROL

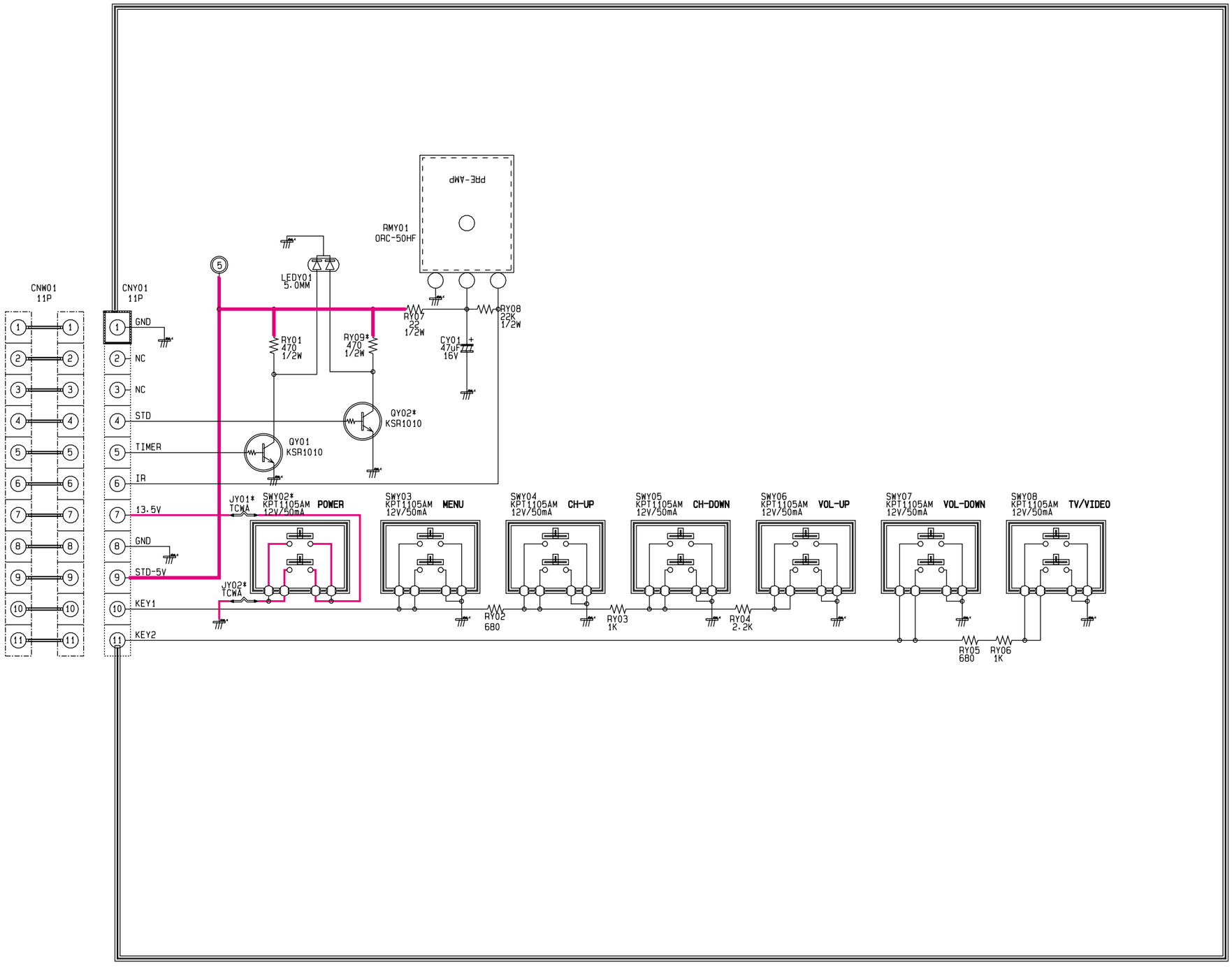

: Power Line
: Signal Line

10-20 FRONT-A/V

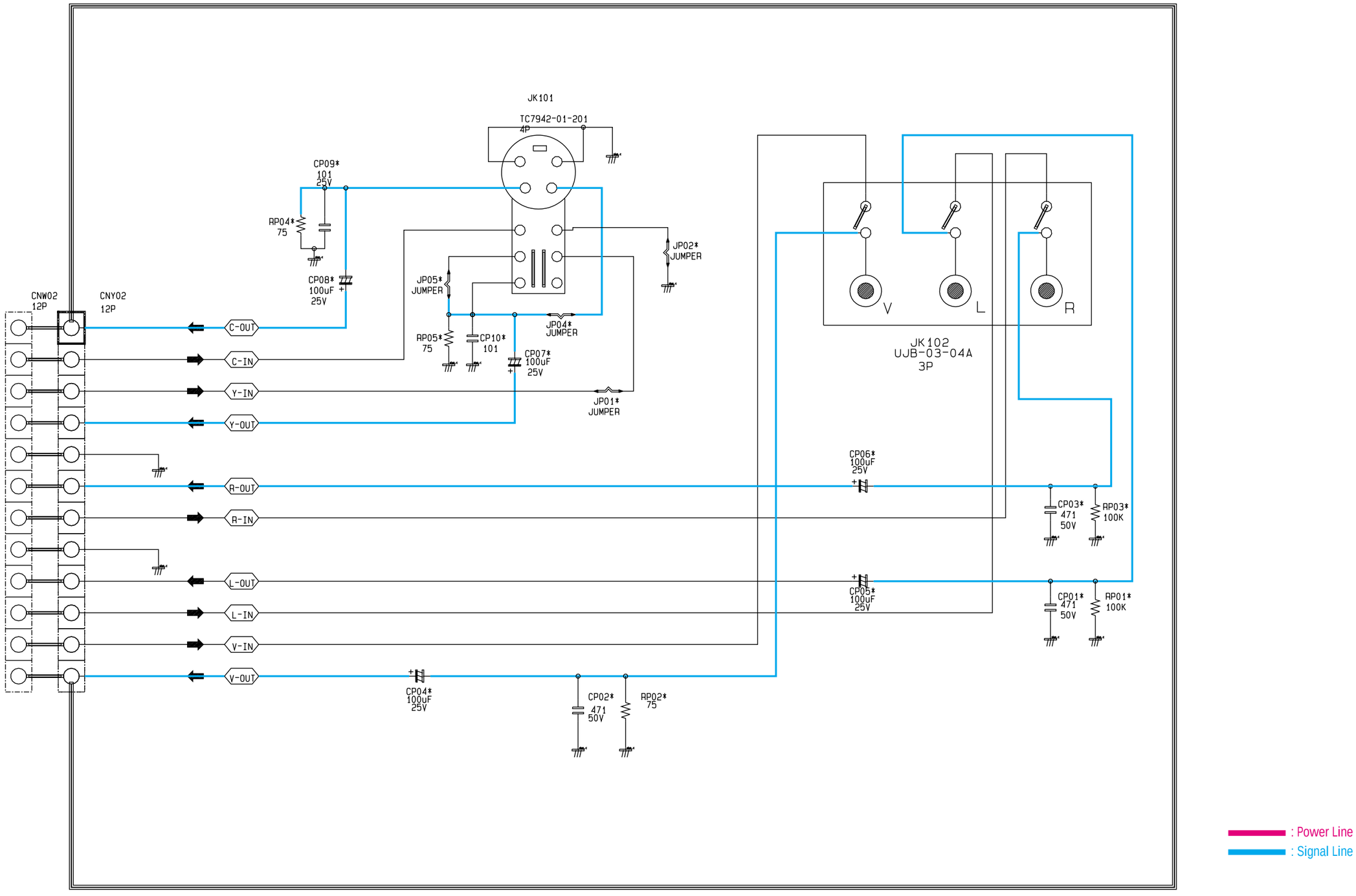

7. Electrical Parts List

7-1 SP43J5HFX/SED

ASSY PCB MAIN(OPT)

Level	Loc. No.	Code No.	Description ; Specification	Remark
1	*	AA94-03113R	ASSY PCB MAIN(OPT);SP43J5HFX/SED,J51A,SW	
..2	C664	2401-001068	C-AL;3300uF,20%,50V,GP,BK,22x40,10	
..2	C665	2401-000737	C-AL;2200uF,20%,50V,GP,TP,18x35.5,7	
..2	CN201	3711-003051	CONNECTOR-HEADER;BOX,8P,1R,2.5mm,STRAGHT	
..2	CN202	3711-003052	CONNECTOR-HEADER;BOX,10P,1R,2.5mm,STRAGH	
..2	CN501	3711-003051	CONNECTOR-HEADER;BOX,8P,1R,2.5mm,STRAGHT	
..2	CN801	3711-003974	CONNECTOR-HEADER;BOX,12P,1R,2.5mm,STRAIG	
..2	CNT01	3710-001208	CONNECTOR-SOCKET;32P,2R,2.54mm,STRAIGHT,	
..2	CNT02	3710-001208	CONNECTOR-SOCKET;32P,2R,2.54mm,STRAIGHT,	
..2	CNY01	3711-003973	CONNECTOR-HEADER;BOX,11P,1R,2.5mm,STRAIG	
..2	CS803	2401-003370	C-AL;47uF,20%,450V,GP,BK,16X35.5,7.	
..2	DS801	0402-000102	DIODE-BRIDGE;D2SB60,600V,1.5A,-	
..2	H001	AA40-10006S	TUNER-F/S;TECC2949PG30A(S),PAL-B/G,TR,18	
⚠ ..2	IC101	AA96-00110C	ASSY-H/S;-,-,AA62-30013K,SI-3090C,-	
...3		1203-000577	IC-VOLTAGE REGUATOR;3090,ZIP,5P,-,PLASTI	
...3		6003-000333	SCREW-TAPTITE;RH,+,2S,M3,L10,ZPC(YEL),SW	S.N.A
...3		AA62-30013K	HEATSINK-ES;-,-,-,-,44/18,-,WHT,A6063 EX	
⚠ ..2	IC102	AA96-00110A	ASSY-H/S;-,-,AA62-30013K,SI-3050C,-	
...3		1203-000203	IC-POSI.ADJUST REG.;3050,TO-220,5P,-,PLA	
...3		6003-000333	SCREW-TAPTITE;RH,+,2S,M3,L10,ZPC(YEL),SW	S.N.A
...3		AA62-30013K	HEATSINK-ES;-,-,-,-,44/18,-,WHT,A6063 EX	
⚠ ..2	IC103	1204-001276	IC-SOUND PROCESSOR;TDA9810,DIP,24P,400MI	
⚠ ..2	IC502	AA96-00110A	ASSY-H/S;-,-,AA62-30013K,SI-3050C,-	
⚠ ..2	IC503	AA96-00110A	ASSY-H/S;-,-,AA62-30013K,SI-3050C,-	
⚠ ..2	IC504	AA96-00110A	ASSY-H/S;-,-,AA62-30013K,SI-3050C,-	
⚠ ..2	IC665	AA96-00038A	ASSY-H/S;-,SOUND AMP,AA62-30173E,TDA726	
...3		0205-000129	GREASE-SILICON;SC102,JAPAN	S.N.A
...3		1201-001026	IC-POWER AMP;7265,ZIP,11P,19.6MIL,DUAL,1	
...3		6003-000333	SCREW-TAPTITE;RH,+,2S,M3,L10,ZPC(YEL),SW	S.N.A
...3		AA62-30173E	HEAT-SINK,ES;-,-,T1.0,WHITE,SCREW-HOLE(1	S.N.A
..2	IF/CAB	AA39-30007B	IF-CABLE;-,T,150mm,1365#26	
..2	L201	AA27-10001C	COIL-CHOKE;-,100uH,K,-,5.0A,ST,700UH-K(R	
..2	L603	AA29-00004A	FILTER-LINE NOISE;-,20UH,3A,AC80-260V,TQ	
..2	QZ107	AA96-50162F	ASSY-H/S;-,POWER,AA62-30013E,2SA1011,30	
...3		0502-000131	TR-POWER;2SA1011-D,PNP,1.2W,TO-220,-,60	
...3		6003-000333	SCREW-TAPTITE;RH,+,2S,M3,L10,ZPC(YEL),SW	S.N.A
...3		AA62-30013E	HEAT-SINK,ES;-,A6063 EXTR,-,-,30(21) T02	S.N.A
..2	QZ108	AA96-50162G	ASSY-H/S;-,AMP,AA62-30013E,2SC2344,30MM	
...3		0502-000153	TR-POWER;2SC2344-D,NPN,1.2W,TO-220,-,60	
...3		6003-000333	SCREW-TAPTITE;RH,+,2S,M3,L10,ZPC(YEL),SW	S.N.A
...3		AA62-30013E	HEAT-SINK,ES;-,A6063 EXTR,-,-,30(21) T02	S.N.A
..2	R913	2001-000786	R-CARBON;47KOHM,5%,1/8W,AA,TP,1.8X3.2MM	
..2	RL801	3501-001053	RELAY-POWER;5VDC,530MW,10A,1FORMA,15MS,5	
⚠ ..2	TS801	AA26-00019A	TRANS-SWITCHING;-,AC80~260V,-,US,-,4MH,B	
..2	X901	2801-003224	CRYSTAL-UNIT;32.768KHZ,20PPM,28-AAY,12.5	
..2		AA95-00519E	ASSY-PCB,PROSCAN;-,SP53J5HF,J51A,-,-,-	
...3	CNP901	3711-003543	CONNECTOR-HEADER;NOWALL,16P,1R,2.54MM,AN	
...3	CNP902	3711-001283	CONNECTOR-HEADER;NOWALL,14P,1R,2.5mm,ANG	
...3	CNP903	3711-001283	CONNECTOR-HEADER;NOWALL,14P,1R,2.5mm,ANG	
...3	CNP904	3711-001283	CONNECTOR-HEADER;NOWALL,14P,1R,2.5mm,ANG	
...3	XP601	2801-003811	CRYSTAL-UNIT;24.576MHZ,20PPM,28-AAM,30PF	
...3		AA99-20079H	ASSY-PCB SUB,AUTO; AA95-00519E ,V	S.N.A
....4	CP101	2203-000938	C-CERAMIC,CHIP;0.47nF,5%,50V,NP0,TP,2012	
....4	CP102	2203-000938	C-CERAMIC,CHIP;0.47nF,5%,50V,NP0,TP,2012	
....4	CP103	2203-000761	C-CERAMIC,CHIP;330nF,10%,16V,X7R,TP,2012	
....4	CP104	2203-000761	C-CERAMIC,CHIP;330nF,10%,16V,X7R,TP,2012	
....4	CP106	2203-000444	C-CERAMIC,CHIP;1nF,10%,50V,X7R,TP,2012,-	
....4	CP109	2203-000218	C-CERAMIC,CHIP;100nF,20%,50V,Y5V,TP,2012	
....4	CP110	2401-001496	C-AL;47uF,20%,16V,GP,TP,5x7,5	
....4	CP111	2203-000979	C-CERAMIC,CHIP;47nF,10%,50V,X7R,TP,2012	
....4	CP112	2401-000486	C-AL;10uF,20%,50V,GP,TP,6.3x7mm,5	
....4	CP113	2203-001172	C-CERAMIC,CHIP;0.006nF,0.25pF,50V,NP0,TP	
....4	CP114	2203-001172	C-CERAMIC,CHIP;0.006nF,0.25pF,50V,NP0,TP	
....4	CP115	2203-000218	C-CERAMIC,CHIP;100nF,20%,50V,Y5V,TP,2012	
....4	CP116	2401-002009	C-AL;100uF,20%,16V,GP,TP,6.3x7,5	
....4	CP117	2203-000218	C-CERAMIC,CHIP;100nF,20%,50V,Y5V,TP,2012	
....4	CP118	2401-002009	C-AL;100uF,20%,16V,GP,TP,6.3x7,5	
....4	CP119	2203-000218	C-CERAMIC,CHIP;100nF,20%,50V,Y5V,TP,2012	
....4	CP120	2203-001002	C-CERAMIC,CHIP;0.047nF,5%,50V,NP0,TP,201	
....4	CP121	2203-001002	C-CERAMIC,CHIP;0.047nF,5%,50V,NP0,TP,201	
....4	CP122	2203-000761	C-CERAMIC,CHIP;330nF,10%,16V,X7R,TP,2012	
....4	CP126	2203-000218	C-CERAMIC,CHIP;100nF,20%,50V,Y5V,TP,2012	
....4	CP127	2401-002009	C-AL;100uF,20%,16V,GP,TP,6.3x7,5	
....4	CP128	2401-002009	C-AL;100uF,20%,16V,GP,TP,6.3x7,5	
....4	CP129	2203-000218	C-CERAMIC,CHIP;100nF,20%,50V,Y5V,TP,2012	
....4	CP130	2401-002009	C-AL;100uF,20%,16V,GP,TP,6.3x7,5	
....4	CP131	2203-000218	C-CERAMIC,CHIP;100nF,20%,50V,Y5V,TP,2012	
....4	CP132	2401-000486	C-AL;10uF,20%,50V,GP,TP,6.3x7mm,5	
....4	CP133	2203-000218	C-CERAMIC,CHIP;100nF,20%,50V,Y5V,TP,2012	
....4	CP135	2203-000575	C-CERAMIC,CHIP;220NF,10%,25V,X7R,TP,2012	
....4	CP137	2203-000218	C-CERAMIC,CHIP;100nF,20%,50V,Y5V,TP,2012	
....4	CP139	2203-000575	C-CERAMIC,CHIP;220NF,10%,25V,X7R,TP,2012	
....4	CP141	2203-000218	C-CERAMIC,CHIP;100nF,20%,50V,Y5V,TP,2012	
....4	CP142	2203-000938	C-CERAMIC,CHIP;0.47nF,5%,50V,NP0,TP,2012	
....4	CP143	2203-000938	C-CERAMIC,CHIP;0.47nF,5%,50V,NP0,TP,2012	
....4	CP144	2203-000938	C-CERAMIC,CHIP;0.47nF,5%,50V,NP0,TP,2012	
....4	CP145	2203-000761	C-CERAMIC,CHIP;330nF,10%,16V,X7R,TP,2012	
....4	CP301	2203-000218	C-CERAMIC,CHIP;100nF,20%,50V,Y5V,TP,2012	
....4	CP302	2203-000218	C-CERAMIC,CHIP;100nF,20%,50V,Y5V,TP,2012	
....4	CP303	2203-000218	C-CERAMIC,CHIP;100nF,20%,50V,Y5V,TP,2012	
....4	CP304	2203-000218	C-CERAMIC,CHIP;100nF,20%,50V,Y5V,TP,2012	
....4	CP305	2401-001496	C-AL;47uF,20%,16V,GP,TP,5x7,5	
....4	CP306	2203-000218	C-CERAMIC,CHIP;100nF,20%,50V,Y5V,TP,2012	
....4	CP307	2401-001496	C-AL;47uF,20%,16V,GP,TP,5x7,5	
....4	CP308	2203-000218	C-CERAMIC,CHIP;100nF,20%,50V,Y5V,TP,2012	
....4	CP309	2401-001496	C-AL;47uF,20%,16V,GP,TP,5x7,5	
....4	CP310	2203-000218	C-CERAMIC,CHIP;100nF,20%,50V,Y5V,TP,2012	
....4	CP311	2401-001496	C-AL;47uF,20%,16V,GP,TP,5x7,5	
....4	CP312	2203-000218	C-CERAMIC,CHIP;100nF,20%,50V,Y5V,TP,2012	
....4	CP313	2203-000218	C-CERAMIC,CHIP;100nF,20%,50V,Y5V,TP,2012	
....4	CP314	2203-000218	C-CERAMIC,CHIP;100nF,20%,50V,Y5V,TP,2012	
....4	CP315	2203-000218	C-CERAMIC,CHIP;100nF,20%,50V,Y5V,TP,2012	
....4	CP316	2203-000218	C-CERAMIC,CHIP;100nF,20%,50V,Y5V,TP,2012	
....4	CP317	2203-000218	C-CERAMIC,CHIP;100nF,20%,50V,Y5V,TP,2012	
....4	CP401	2203-000218	C-CERAMIC,CHIP;100nF,20%,50V,Y5V,TP,2012	
....4	CP402	2203-000218	C-CERAMIC,CHIP;100nF,20%,50V,Y5V,TP,2012	
....4	CP403	2401-002009	C-AL;100uF,20%,16V,GP,TP,6.3x7,5	
....4	CP404	2203-000218	C-CERAMIC,CHIP;100nF,20%,50V,Y5V,TP,2012	
....4	CP405	2203-000218	C-CERAMIC,CHIP;100nF,20%,50V,Y5V,TP,2012	
....4	CP406	2203-000142	C-CERAMIC,CHIP;1.5nF,10%,50V,X7R,TP,2012	
....4	CP407	2203-000239	C-CERAMIC,CHIP;0.1nF,5%,50V,NP0,TP,2012	
....4	CP408	2203-000218	C-CERAMIC,CHIP;100nF,20%,50V,Y5V,TP,2012	
....4	CP409	2203-000555	C-CERAMIC,CHIP;0.02nF,5%,50V,NP0,TP,2012	
....4	CP410	2203-000218	C-CERAMIC,CHIP;100nF,20%,50V,Y5V,TP,2012	
....4	CP411	2203-000218	C-CERAMIC,CHIP;100nF,20%,50V,Y5V,TP,2012	
....4	CP412	2203-000555	C-CERAMIC,CHIP;0.02nF,5%,50V,NP0,TP,2012	
....4	CP413	2203-000555	C-CERAMIC,CHIP;0.02nF,5%,50V,NP0,TP,2012	
....4	CP414	2203-000218	C-CERAMIC,CHIP;100nF,20%,50V,Y5V,TP,2012	
....4	CP415	2203-000218	C-CERAMIC,CHIP;100nF,20%,50V,Y5V,TP,2012	
....4	CP416	2203-000218	C-CERAMIC,CHIP;100nF,20%,50V,Y5V,TP,2012	
....4	CP417	2203-000218	C-CERAMIC,CHIP;100nF,20%,50V,Y5V,TP,2012	
....4	CP418	2404-001020	C-TA,CHIP;10uF,20%,10V,GP,TP,3216,3.2	
....4	CP419	2404-001020	C-TA,CHIP;10uF,20%,10V,GP,TP,3216,3.2	
....4	CP420	2404-001020	C-TA,CHIP;10uF,20%,10V,GP,TP,3216,3.2	
....4	CP501	2203-000925	C-CERAMIC,CHIP;470NF,+80-20%,50V,Y5V,TP,	
....4	CP502	2203-000925	C-CERAMIC,CHIP;470NF,+80-20%,50V,Y5V,TP,	
....4	CP503	2203-000925	C-CERAMIC,CHIP;470NF,+80-20%,50V,Y5V,TP,	
....4	CP504	2203-000925	C-CERAMIC,CHIP;470NF,+80-20%,50V,Y5V,TP,	
....4	CP505	2203-000925	C-CERAMIC,CHIP;470NF,+80-20%,50V,Y5V,TP,	
....4	CP506	2401-001496	C-AL;47uF,20%,16V,GP,TP,5x7,5	
....4	CP507	2203-000218	C-CERAMIC,CHIP;100nF,20%,50V,Y5V,TP,2012	
....4	CP508	2203-000925	C-CERAMIC,CHIP;470NF,+80-20%,50V,Y5V,TP,	

Level	Loc. No.	Code No.	Description ; Specification	Remark
....4	CP509	2203-000925	C-CERAMIC,CHIP;470NF,+80-20%,50V,Y5V,TP,	
....4	CP510	2203-000925	C-CERAMIC,CHIP;470NF,+80-20%,50V,Y5V,TP,	
....4	CP511	2203-000925	C-CERAMIC,CHIP;470NF,+80-20%,50V,Y5V,TP,	
....4	CP512	2203-000925	C-CERAMIC,CHIP;470NF,+80-20%,50V,Y5V,TP,	
....4	CP513	2203-000925	C-CERAMIC,CHIP;470NF,+80-20%,50V,Y5V,TP,	
....4	CP514	2203-000925	C-CERAMIC,CHIP;470NF,+80-20%,50V,Y5V,TP,	
....4	CP515	2203-000925	C-CERAMIC,CHIP;470NF,+80-20%,50V,Y5V,TP,	
....4	CP516	2203-000925	C-CERAMIC,CHIP;470NF,+80-20%,50V,Y5V,TP,	
....4	CP517	2203-000925	C-CERAMIC,CHIP;470NF,+80-20%,50V,Y5V,TP,	
....4	CP518	2401-000598	C-AL;1uF,20%,50V,GP,TP,4x7,5	
....4	CP519	2203-000925	C-CERAMIC,CHIP;470NF,+80-20%,50V,Y5V,TP,	
....4	CP520	2203-000925	C-CERAMIC,CHIP;470NF,+80-20%,50V,Y5V,TP,	
....4	CP521	2203-000925	C-CERAMIC,CHIP;470NF,+80-20%,50V,Y5V,TP,	
....4	CP522	2203-000925	C-CERAMIC,CHIP;470NF,+80-20%,50V,Y5V,TP,	
....4	CP523	2203-000925	C-CERAMIC,CHIP;470NF,+80-20%,50V,Y5V,TP,	
....4	CP524	2203-000260	C-CERAMIC,CHIP;10nF,10%,50V,X7R,TP,2012	
....4	CP525	2203-000218	C-CERAMIC,CHIP;100nF,20%,50V,Y5V,TP,2012	
....4	CP527	2203-000218	C-CERAMIC,CHIP;100nF,20%,50V,Y5V,TP,2012	
....4	CP528	2401-001496	C-AL;47uF,20%,16V,GP,TP,5x7,5	
....4	CP529	2203-000575	C-CERAMIC,CHIP;220NF,10%,25V,X7R,TP,2012	
....4	CP530	2203-000575	C-CERAMIC,CHIP;220NF,10%,25V,X7R,TP,2012	
....4	CP531	2203-000575	C-CERAMIC,CHIP;220NF,10%,25V,X7R,TP,2012	
....4	CP532	2203-000925	C-CERAMIC,CHIP;470NF,+80-20%,50V,Y5V,TP,	
....4	CP533	2401-000486	C-AL;10uF,20%,50V,GP,TP,6.3x7mm,5	
....4	CP534	2203-000260	C-CERAMIC,CHIP;10nF,10%,50V,X7R,TP,2012	
....4	CP535	2203-000260	C-CERAMIC,CHIP;10nF,10%,50V,X7R,TP,2012	
....4	CP536	2203-000260	C-CERAMIC,CHIP;10nF,10%,50V,X7R,TP,2012	
....4	CP537	2203-000260	C-CERAMIC,CHIP;10nF,10%,50V,X7R,TP,2012	
....4	CP538	2203-000260	C-CERAMIC,CHIP;10nF,10%,50V,X7R,TP,2012	
....4	CP539	2203-000260	C-CERAMIC,CHIP;10nF,10%,50V,X7R,TP,2012	
....4	CP540	2401-000486	C-AL;10uF,20%,50V,GP,TP,6.3x7mm,5	
....4	CP541	2203-001002	C-CERAMIC,CHIP;0.047nF,5%,50V,NP0,TP,201	
....4	CP542	2203-001002	C-CERAMIC,CHIP;0.047nF,5%,50V,NP0,TP,201	
....4	CP545	2203-000925	C-CERAMIC,CHIP;470NF,+80-20%,50V,Y5V,TP,	
....4	CP546	2203-000260	C-CERAMIC,CHIP;10nF,10%,50V,X7R,TP,2012	
....4	CP547	2203-000260	C-CERAMIC,CHIP;10nF,10%,50V,X7R,TP,2012	
....4	CP548	2203-000260	C-CERAMIC,CHIP;10nF,10%,50V,X7R,TP,2012	
....4	CP549	2203-000218	C-CERAMIC,CHIP;100nF,20%,50V,Y5V,TP,2012	
....4	CP550	2203-000218	C-CERAMIC,CHIP;100nF,20%,50V,Y5V,TP,2012	
....4	CP551	2203-000218	C-CERAMIC,CHIP;100nF,20%,50V,Y5V,TP,2012	
....4	CP552	2401-001496	C-AL;47uF,20%,16V,GP,TP,5x7,5	
....4	CP553	2203-000218	C-CERAMIC,CHIP;100nF,20%,50V,Y5V,TP,2012	
....4	CP554	2203-000218	C-CERAMIC,CHIP;100nF,20%,50V,Y5V,TP,2012	
....4	CP555	2203-000218	C-CERAMIC,CHIP;100nF,20%,50V,Y5V,TP,2012	
....4	CP556	2203-000218	C-CERAMIC,CHIP;100nF,20%,50V,Y5V,TP,2012	
....4	CP559	2203-000218	C-CERAMIC,CHIP;100nF,20%,50V,Y5V,TP,2012	
....4	CP601	2203-001088	C-CERAMIC,CHIP;0.005nF,0.25pF,50V,NP0,TP	
....4	CP602	2203-001088	C-CERAMIC,CHIP;0.005nF,0.25pF,50V,NP0,TP	
....4	CP603	2203-000925	C-CERAMIC,CHIP;470NF,+80-20%,50V,Y5V,TP,	
....4	CP604	2203-000938	C-CERAMIC,CHIP;0.47nF,5%,50V,NP0,TP,2012	
....4	CP605	2203-000444	C-CERAMIC,CHIP;1nF,10%,50V,X7R,TP,2012,-	
....4	CP607	2203-000218	C-CERAMIC,CHIP;100nF,20%,50V,Y5V,TP,2012	
....4	CP609	2203-000218	C-CERAMIC,CHIP;100nF,20%,50V,Y5V,TP,2012	
....4	CP610	2203-000218	C-CERAMIC,CHIP;100nF,20%,50V,Y5V,TP,2012	
....4	CP611	2203-000444	C-CERAMIC,CHIP;1nF,10%,50V,X7R,TP,2012,-	
....4	CP612	2203-000444	C-CERAMIC,CHIP;1nF,10%,50V,X7R,TP,2012,-	
....4	CP613	2203-000444	C-CERAMIC,CHIP;1nF,10%,50V,X7R,TP,2012,-	
....4	CP614	2203-000218	C-CERAMIC,CHIP;100nF,20%,50V,Y5V,TP,2012	
....4	CP615	2203-000218	C-CERAMIC,CHIP;100nF,20%,50V,Y5V,TP,2012	
....4	CP616	2203-001002	C-CERAMIC,CHIP;0.047nF,5%,50V,NP0,TP,201	
....4	CP617	2203-000218	C-CERAMIC,CHIP;100nF,20%,50V,Y5V,TP,2012	
....4	CP618	2203-000239	C-CERAMIC,CHIP;0.1nF,5%,50V,NP0,TP,2012	
....4	CP619	2203-000218	C-CERAMIC,CHIP;100nF,20%,50V,Y5V,TP,2012	
....4	CP620	2203-000218	C-CERAMIC,CHIP;100nF,20%,50V,Y5V,TP,2012	
....4	CP621	2203-000239	C-CERAMIC,CHIP;0.1nF,5%,50V,NP0,TP,2012	
....4	CP622	2203-000142	C-CERAMIC,CHIP;1.5nF,10%,50V,X7R,TP,2012	
....4	CP623	2203-000218	C-CERAMIC,CHIP;100nF,20%,50V,Y5V,TP,2012	
....4	CP624	2401-001496	C-AL;47uF,20%,16V,GP,TP,5x7,5	
....4	CP625	2203-000218	C-CERAMIC,CHIP;100nF,20%,50V,Y5V,TP,2012	
....4	CP626	2401-002009	C-AL;100uF,20%,16V,GP,TP,6.3x7,5	
....4	CP627	2203-000218	C-CERAMIC,CHIP;100nF,20%,50V,Y5V,TP,2012	
....4	CP628	2401-002009	C-AL;100uF,20%,16V,GP,TP,6.3x7,5	
....4	CP629	2203-000218	C-CERAMIC,CHIP;100nF,20%,50V,Y5V,TP,2012	
....4	CP630	2203-000218	C-CERAMIC,CHIP;100nF,20%,50V,Y5V,TP,2012	
....4	CP631	2401-000598	C-AL;1uF,20%,50V,GP,TP,4x7,5	
....4	CP901	2404-001229	C-TA,CHIP;4.7uF,20%,25V,GP,TP,3528	

Level	Loc. No.	Code No.	Description ; Specification	Remark
....4	CP902	2203-000218	C-CERAMIC,CHIP;100nF,20%,50V,Y5V,TP,2012	
....4	CP904	2203-001088	C-CERAMIC,CHIP;0.005nF,0.25pF,50V,NP0,TP	
....4	CP905	2203-000925	C-CERAMIC,CHIP;470NF,+80-20%,50V,Y5V,TP,	
....4	CP906	2203-000495	C-CERAMIC,CHIP;2.2nF,10%,50V,X7R,TP,2012	
....4	DP501	0403-001117	DIODE-ZENER;RLZ12B,5%,500mW,LL-34,TP	
....4	DP502	0403-001117	DIODE-ZENER;RLZ12B,5%,500mW,LL-34,TP	
....4	DP503	0403-001117	DIODE-ZENER;RLZ12B,5%,500mW,LL-34,TP	
....4	DP504	0403-000620	DIODE-ZENER;RLZ5.6B,5.6V,5.45-5.73V,400m	
....4	DP505	0403-000620	DIODE-ZENER;RLZ5.6B,5.6V,5.45-5.73V,400m	
....4	DP601	0401-000133	DIODE-SWITCHING;RLS4148,100V,200mA,SOD-8	
....4	DP602	0403-000620	DIODE-ZENER;RLZ5.6B,5.6V,5.45-5.73V,400m	
....4	DP603	0401-000133	DIODE-SWITCHING;RLS4148,100V,200mA,SOD-8	
....4	DP604	0401-000160	DIODE-SWITCHING;ISS314,30V,100mA,USC,TP	
....4	DP605	0401-000160	DIODE-SWITCHING;ISS314,30V,100mA,USC,TP	
....4	DP606	0401-000133	DIODE-SWITCHING;RLS4148,100V,200mA,SOD-8	
....4	DP607	0403-000620	DIODE-ZENER;RLZ5.6B,5.6V,5.45-5.73V,400m	
....4	DP901	0401-000133	DIODE-SWITCHING;RLS4148,100V,200mA,SOD-8	
....4	DP902	0401-000133	DIODE-SWITCHING;RLS4148,100V,200mA,SOD-8	
....4	DP903	0401-000133	DIODE-SWITCHING;RLS4148,100V,200mA,SOD-8	
....4	DP904	0401-000133	DIODE-SWITCHING;RLS4148,100V,200mA,SOD-8	
....4	FP101	2901-001120	FILTER-EMI SMD;25V,100mA,-,-,3.2x1.6x1,T	
....4	FP102	2901-001120	FILTER-EMI SMD;25V,100mA,-,-,3.2x1.6x1,T	
....4	FP301	2901-001120	FILTER-EMI SMD;25V,100mA,-,-,3.2x1.6x1,T	
....4	FP901	2901-000226	FILTER-EMI SMD;25V,0.3A,-,100pF,3.2x1.25	
....4	FP902	2901-000226	FILTER-EMI SMD;25V,0.3A,-,100pF,3.2x1.25	
....4	FP903	2901-000226	FILTER-EMI SMD;25V,0.3A,-,100pF,3.2x1.25	
....4	FP904	2901-000226	FILTER-EMI SMD;25V,0.3A,-,100pF,3.2x1.25	
....4	FP905	2901-000226	FILTER-EMI SMD;25V,0.3A,-,100pF,3.2x1.25	
....4	FP906	2901-000226	FILTER-EMI SMD;25V,0.3A,-,100pF,3.2x1.25	
....4	FP907	2901-000226	FILTER-EMI SMD;25V,0.3A,-,100pF,3.2x1.25	
....4	FP908	2901-000226	FILTER-EMI SMD;25V,0.3A,-,100pF,3.2x1.25	
⚠ 4	ICP101	1204-001362	IC-VIDEO PROCESS;VPC3215C-B8,PLCC,43P,-,	
⚠ 4	ICP103	1205-001172	IC-INTERFACE;CIP3250A-B1,PLCC,68P,-,PLAS	
⚠ 4	ICP301	1204-001623	IC-VERTICAL PROCESSO;SDA9400,QFP,64P,-,P	
⚠ 4	ICP302	1203-001419	IC-VOLTAGE REGULATOR;4931,TO-252,3P,6.6x	
⚠ 4	ICP401	1002-001045	IC-D/A CONVERTER;9280,8BIT,PLCC,68P,-,-,	
⚠ 4	ICP501	1204-001550	IC-VIDEO PROCESS;CXA2101AQ,QFP,80P,-,PLA	
⚠ 4	ICP601	1204-001372	IC-HOR./VER.PROCESSO;SDA9361,QFP,44P,-,P	
⚠ 4	ICP901	1202-000001	IC-VOLTAGE COMP.;7533,TO-92,3P,-,SINGLE,	
....4	LP101	3301-001324	CORE-FERRITE BEAD;AB,15OHM,2X1.25X0.9MM,	S.N.A
....4	LP102	3301-001324	CORE-FERRITE BEAD;AB,15OHM,2X1.25X0.9MM,	S.N.A
....4	LP103	3301-001324	CORE-FERRITE BEAD;AB,15OHM,2X1.25X0.9MM,	S.N.A
....4	LP105	3301-001324	CORE-FERRITE BEAD;AB,15OHM,2X1.25X0.9MM,	S.N.A
....4	LP106	3301-001324	CORE-FERRITE BEAD;AB,15OHM,2X1.25X0.9MM,	S.N.A
....4	LP107	3301-001324	CORE-FERRITE BEAD;AB,15OHM,2X1.25X0.9MM,	S.N.A
....4	LP301	3301-001324	CORE-FERRITE BEAD;AB,15OHM,2X1.25X0.9MM,	S.N.A
....4	LP302	3301-001324	CORE-FERRITE BEAD;AB,15OHM,2X1.25X0.9MM,	S.N.A
....4	LP303	3301-001324	CORE-FERRITE BEAD;AB,15OHM,2X1.25X0.9MM,	S.N.A
....4	LP401	3301-001324	CORE-FERRITE BEAD;AB,15OHM,2X1.25X0.9MM,	S.N.A
....4	LP402	3301-001324	CORE-FERRITE BEAD;AB,15OHM,2X1.25X0.9MM,	S.N.A
....4	LP403	3301-001324	CORE-FERRITE BEAD;AB,15OHM,2X1.25X0.9MM,	S.N.A
....4	LP404	3301-001324	CORE-FERRITE BEAD;AB,15OHM,2X1.25X0.9MM,	S.N.A
....4	LP601	3301-001324	CORE-FERRITE BEAD;AB,15OHM,2X1.25X0.9MM,	S.N.A
....4	LP602	3301-001324	CORE-FERRITE BEAD;AB,15OHM,2X1.25X0.9MM,	S.N.A
....4	LP603	2703-001717	INDUCTOR-SMD;1.2uH,5%,3.2x2.5x2.2mm	
....4	LP901	3301-001186	CORE-FERRITE BEAD;AB,600ohm,3.2x1.6x1.3m	S.N.A
....4	LP902	3301-001186	CORE-FERRITE BEAD;AB,600ohm,3.2x1.6x1.3m	S.N.A
....4	LP903	3301-001324	CORE-FERRITE BEAD;AB,15OHM,2X1.25X0.9MM,	S.N.A
....4	LP904	3301-001184	CORE-FERRITE BEAD;AB,1.3kohm,4.5x3.2x1.3	S.N.A
....4	LP905	3301-001184	CORE-FERRITE BEAD;AB,1.3kohm,4.5x3.2x1.3	S.N.A
....4	LP906	3301-001184	CORE-FERRITE BEAD;AB,1.3kohm,4.5x3.2x1.3	S.N.A
....4	QP501	0501-000280	TR-SMALL SIGNAL;KSA1182,PNP,150mW,SOT-23	
....4	QP502	0501-000344	TR-SMALL SIGNAL;KSC1623-G,NPN,200mW,SOT-	
....4	QP503	0501-000344	TR-SMALL SIGNAL;KSC1623-G,NPN,200mW,SOT-	
....4	QP504	0501-000280	TR-SMALL SIGNAL;KSA1182,PNP,150mW,SOT-23	
....4	QP505	0501-000280	TR-SMALL SIGNAL;KSA1182,PNP,150mW,SOT-23	
....4	QP506	0501-000280	TR-SMALL SIGNAL;KSA1182,PNP,150mW,SOT-23	
....4	QP508	0501-000344	TR-SMALL SIGNAL;KSC1623-G,NPN,200mW,SOT-	
....4	QP602	0501-000344	TR-SMALL SIGNAL;KSC1623-G,NPN,200mW,SOT-	
....4	QP902	0501-000280	TR-SMALL SIGNAL;KSA1182,PNP,150mW,SOT-23	
....4	RP101	2007-000029	R-CHIP;0OHM,5%,1/10W,DA,TP,2012	
....4	RP102	2007-000947	R-CHIP;47OHM,5%,1/10W,DA,TP,2012	
....4	RP106	2007-000290	R-CHIP;100OHM,5%,1/10W,DA,TP,2012	
....4	RP112	2007-000290	R-CHIP;100OHM,5%,1/10W,DA,TP,2012	
....4	RP113	2007-000290	R-CHIP;100OHM,5%,1/10W,DA,TP,2012	
....4	RP114	2007-000290	R-CHIP;100OHM,5%,1/10W,DA,TP,2012	

Level	Loc. No.	Code No.	Description ; Specification	Remark
....4	RP115	2007-000290	R-CHIP;100OHM,5%,1/10W,DA,TP,2012	
....4	RP117	2007-000029	R-CHIP;0OHM,5%,1/10W,DA,TP,2012	
....4	RP134	2007-000290	R-CHIP;100OHM,5%,1/10W,DA,TP,2012	
....4	RP135	2007-000290	R-CHIP;100OHM,5%,1/10W,DA,TP,2012	
....4	RP136	2011-000585	R-NETWORK;47ohm,5%,63mW,L,CHIP,8P,TP	
....4	RP137	2011-000585	R-NETWORK;47ohm,5%,63mW,L,CHIP,8P,TP	
....4	RP138	2011-000585	R-NETWORK;47ohm,5%,63mW,L,CHIP,8P,TP	
....4	RP139	2011-000585	R-NETWORK;47ohm,5%,63mW,L,CHIP,8P,TP	
....4	RP140	2011-000585	R-NETWORK;47ohm,5%,63mW,L,CHIP,8P,TP	
....4	RP141	2011-000585	R-NETWORK;47ohm,5%,63mW,L,CHIP,8P,TP	
....4	RP142	2011-000585	R-NETWORK;47ohm,5%,63mW,L,CHIP,8P,TP	
....4	RP143	2011-000585	R-NETWORK;47ohm,5%,63mW,L,CHIP,8P,TP	
....4	RP153	2007-000401	R-CHIP;150OHM,5%,1/10W,DA,TP,2012	
....4	RP154	2007-000308	R-CHIP;10OHM,5%,1/10W,DA,TP,2012	
....4	RP155	2007-000947	R-CHIP;47OHM,5%,1/10W,DA,TP,2012	
....4	RP156	2007-000947	R-CHIP;47OHM,5%,1/10W,DA,TP,2012	
....4	RP157	2007-000947	R-CHIP;47OHM,5%,1/10W,DA,TP,2012	
....4	RP159	2007-001166	R-CHIP;75OHM,5%,1/10W,DA,TP,2012	
....4	RP161	2007-000290	R-CHIP;100OHM,5%,1/10W,DA,TP,2012	
....4	RP301	2007-000290	R-CHIP;100OHM,5%,1/10W,DA,TP,2012	
....4	RP302	2007-000290	R-CHIP;100OHM,5%,1/10W,DA,TP,2012	
....4	RP303	2007-000290	R-CHIP;100OHM,5%,1/10W,DA,TP,2012	
....4	RP304	2007-000290	R-CHIP;100OHM,5%,1/10W,DA,TP,2012	
....4	RP305	2007-000290	R-CHIP;100OHM,5%,1/10W,DA,TP,2012	
....4	RP401	2011-000585	R-NETWORK;47ohm,5%,63mW,L,CHIP,8P,TP	
....4	RP402	2011-000585	R-NETWORK;47ohm,5%,63mW,L,CHIP,8P,TP	
....4	RP403	2011-000585	R-NETWORK;47ohm,5%,63mW,L,CHIP,8P,TP	
....4	RP404	2011-000585	R-NETWORK;47ohm,5%,63mW,L,CHIP,8P,TP	
....4	RP405	2007-000290	R-CHIP;100OHM,5%,1/10W,DA,TP,2012	
....4	RP406	2007-000290	R-CHIP;100OHM,5%,1/10W,DA,TP,2012	
....4	RP407	2007-000290	R-CHIP;100OHM,5%,1/10W,DA,TP,2012	
....4	RP408	2007-001055	R-CHIP;6.2KOHM,5%,1/10W,DA,TP,2012	
....4	RP409	2007-000401	R-CHIP;150OHM,5%,1/10W,DA,TP,2012	
....4	RP411	2007-001166	R-CHIP;75OHM,5%,1/10W,DA,TP,2012	
....4	RP412	2007-001166	R-CHIP;75OHM,5%,1/10W,DA,TP,2012	
....4	RP413	2007-000401	R-CHIP;150OHM,5%,1/10W,DA,TP,2012	
....4	RP415	2007-001166	R-CHIP;75OHM,5%,1/10W,DA,TP,2012	
....4	RP416	2007-001166	R-CHIP;75OHM,5%,1/10W,DA,TP,2012	
....4	RP417	2007-000380	R-CHIP;13KOHM,5%,1/10W,DA,TP,2012	
....4	RP418	2007-000401	R-CHIP;150OHM,5%,1/10W,DA,TP,2012	
....4	RP419	2007-001166	R-CHIP;75OHM,5%,1/10W,DA,TP,2012	
....4	RP421	2007-001166	R-CHIP;75OHM,5%,1/10W,DA,TP,2012	
....4	RP422	2007-000300	R-CHIP;10KOHM,5%,1/10W,DA,TP,2012	
....4	RP423	2007-000401	R-CHIP;150OHM,5%,1/10W,DA,TP,2012	
....4	RP501	2007-000029	R-CHIP;0OHM,5%,1/10W,DA,TP,2012	
....4	RP502	2007-000029	R-CHIP;0OHM,5%,1/10W,DA,TP,2012	
....4	RP503	2007-000029	R-CHIP;0OHM,5%,1/10W,DA,TP,2012	
....4	RP504	2007-000030	R-CHIP;560OHM,5%,1/10W,DA,TP,2012	
....4	RP505	2007-000572	R-CHIP;220OHM,5%,1/10W,DA,TP,2012	
....4	RP506	2007-000493	R-CHIP;2.2KOHM,5%,1/10W,DA,TP,2012	
....4	RP507	2007-001166	R-CHIP;75OHM,5%,1/10W,DA,TP,2012	
....4	RP509	2007-000931	R-CHIP;470OHM,5%,1/10W,DA,TP,2012	
....4	RP510	2007-000938	R-CHIP;47KOHM,1%,1/10W,DA,TP,2012	
....4	RP513	2007-000290	R-CHIP;100OHM,5%,1/10W,DA,TP,2012	
....4	RP514	2007-000210	R-CHIP;1.1KOHM,5%,1/10W,DA,TP,2012	
....4	RP515	2007-000468	R-CHIP;1KOHM,5%,1/10W,DA,TP,2012	
....4	RP516	2007-000468	R-CHIP;1KOHM,5%,1/10W,DA,TP,2012	
....4	RP517	2007-000290	R-CHIP;100OHM,5%,1/10W,DA,TP,2012	
....4	RP518	2007-000210	R-CHIP;1.1KOHM,5%,1/10W,DA,TP,2012	
....4	RP519	2007-000290	R-CHIP;100OHM,5%,1/10W,DA,TP,2012	
....4	RP521	2007-000210	R-CHIP;1.1KOHM,5%,1/10W,DA,TP,2012	
....4	RP522	2007-000290	R-CHIP;100OHM,5%,1/10W,DA,TP,2012	
....4	RP523	2007-000210	R-CHIP;1.1KOHM,5%,1/10W,DA,TP,2012	
....4	RP524	2007-000290	R-CHIP;100OHM,5%,1/10W,DA,TP,2012	
....4	RP525	2007-000290	R-CHIP;100OHM,5%,1/10W,DA,TP,2012	
....4	RP526	2007-000210	R-CHIP;1.1KOHM,5%,1/10W,DA,TP,2012	
....4	RP527	2007-000290	R-CHIP;100OHM,5%,1/10W,DA,TP,2012	
....4	RP528	2007-000290	R-CHIP;100OHM,5%,1/10W,DA,TP,2012	
....4	RP529	2007-000210	R-CHIP;1.1KOHM,5%,1/10W,DA,TP,2012	
....4	RP530	2007-000290	R-CHIP;100OHM,5%,1/10W,DA,TP,2012	
....4	RP537	2007-000689	R-CHIP;3.3MOHM,5%,1/10W,DA,TP,2012	
....4	RP542	2007-000290	R-CHIP;100OHM,5%,1/10W,DA,TP,2012	
....4	RP543	2007-000290	R-CHIP;100OHM,5%,1/10W,DA,TP,2012	
....4	RP544	2007-000029	R-CHIP;0OHM,5%,1/10W,DA,TP,2012	
....4	RP546	2007-000290	R-CHIP;100OHM,5%,1/10W,DA,TP,2012	
....4	RP547	2007-000290	R-CHIP;100OHM,5%,1/10W,DA,TP,2012	
....4	RP549	2007-000671	R-CHIP;2KOHM,5%,1/10W,DA,TP,2012	

Level	Loc. No.	Code No.	Description ; Specification	Remark
....4	RP550	2007-000290	R-CHIP;100OHM,5%,1/10W,DA,TP,2012	
....4	RP553	2007-000290	R-CHIP;100OHM,5%,1/10W,DA,TP,2012	
....4	RP554	2007-000290	R-CHIP;100OHM,5%,1/10W,DA,TP,2012	
....4	RP555	2007-000582	R-CHIP;22KOHM,1%,1/10W,DA,TP,2012	
....4	RP556	2007-000290	R-CHIP;100OHM,5%,1/10W,DA,TP,2012	
....4	RP560	2007-000468	R-CHIP;1KOHM,5%,1/10W,DA,TP,2012	
....4	RP562	2007-000468	R-CHIP;1KOHM,5%,1/10W,DA,TP,2012	
....4	RP565	2007-000029	R-CHIP;0OHM,5%,1/10W,DA,TP,2012	
....4	RP566	2007-000029	R-CHIP;0OHM,5%,1/10W,DA,TP,2012	
....4	RP567	2007-000029	R-CHIP;0OHM,5%,1/10W,DA,TP,2012	
....4	RP568	2007-000029	R-CHIP;0OHM,5%,1/10W,DA,TP,2012	
....4	RP569	2007-000029	R-CHIP;0OHM,5%,1/10W,DA,TP,2012	
....4	RP570	2007-000300	R-CHIP;10KOHM,5%,1/10W,DA,TP,2012	
....4	RP571	2007-000290	R-CHIP;100OHM,5%,1/10W,DA,TP,2012	
....4	RP601	2007-000290	R-CHIP;100OHM,5%,1/10W,DA,TP,2012	
....4	RP602	2007-000290	R-CHIP;100OHM,5%,1/10W,DA,TP,2012	
....4	RP603	2007-001208	R-CHIP;82KOHM,5%,1/10W,DA,TP,2012	
....4	RP604	2007-000947	R-CHIP;47OHM,5%,1/10W,DA,TP,2012	
....4	RP605	2007-000518	R-CHIP;2.7KOHM,5%,1/10W,DA,TP,2012	
....4	RP606	2007-000518	R-CHIP;2.7KOHM,5%,1/10W,DA,TP,2012	
....4	RP609	2007-000872	R-CHIP;4.7KOHM,5%,1/10W,DA,TP,2012	
....4	RP611	2007-000468	R-CHIP;1KOHM,5%,1/10W,DA,TP,2012	
....4	RP613	2007-000941	R-CHIP;47KOHM,5%,1/10W,DA,TP,2012	
....4	RP614	2007-000001	R-CHIP;68KOHM,5%,1/10W,DA,TP,2012	
....4	RP619	2007-000468	R-CHIP;1KOHM,5%,1/10W,DA,TP,2012	
....4	RP620	2007-000947	R-CHIP;47OHM,5%,1/10W,DA,TP,2012	
....4	RP621	2007-000947	R-CHIP;47OHM,5%,1/10W,DA,TP,2012	
....4	RP622	2007-000468	R-CHIP;1KOHM,5%,1/10W,DA,TP,2012	
....4	RP623	2007-000822	R-CHIP;390OHM,5%,1/10W,DA,TP,2012	
....4	RP624	2007-000290	R-CHIP;100OHM,5%,1/10W,DA,TP,2012	
....4	RP625	2007-000872	R-CHIP;4.7KOHM,5%,1/10W,DA,TP,2012	
....4	RP626	2007-000931	R-CHIP;470OHM,5%,1/10W,DA,TP,2012	
....4	RP627	2007-000872	R-CHIP;4.7KOHM,5%,1/10W,DA,TP,2012	
....4	RP628	2007-000267	R-CHIP;1.8KOHM,5%,1/10W,DA,TP,2012	
....4	RP629	2007-000872	R-CHIP;4.7KOHM,5%,1/10W,DA,TP,2012	
....4	RP630	2007-000468	R-CHIP;1KOHM,5%,1/10W,DA,TP,2012	
....4	RP631	2007-000872	R-CHIP;4.7KOHM,5%,1/10W,DA,TP,2012	
....4	RP709	2007-000029	R-CHIP;0OHM,5%,1/10W,DA,TP,2012	
....4	RP719	2007-000029	R-CHIP;0OHM,5%,1/10W,DA,TP,2012	
....4	RP727	2007-000029	R-CHIP;0OHM,5%,1/10W,DA,TP,2012	
....4	RP735	2007-000029	R-CHIP;0OHM,5%,1/10W,DA,TP,2012	
....4	RP736	2007-000029	R-CHIP;0OHM,5%,1/10W,DA,TP,2012	
....4	RP737	2007-000029	R-CHIP;0OHM,5%,1/10W,DA,TP,2012	
....4	RP738	2007-000029	R-CHIP;0OHM,5%,1/10W,DA,TP,2012	
....4	RP901	2007-000290	R-CHIP;100OHM,5%,1/10W,DA,TP,2012	
....4	RP904	2007-000029	R-CHIP;0OHM,5%,1/10W,DA,TP,2012	
....4	RP907	2007-000290	R-CHIP;100OHM,5%,1/10W,DA,TP,2012	
....4	RP908	2007-000290	R-CHIP;100OHM,5%,1/10W,DA,TP,2012	
....4	RP912	2007-000290	R-CHIP;100OHM,5%,1/10W,DA,TP,2012	
....4	RP913	2007-000290	R-CHIP;100OHM,5%,1/10W,DA,TP,2012	
....4	RP914	2007-000290	R-CHIP;100OHM,5%,1/10W,DA,TP,2012	
....4	RP915	2007-000290	R-CHIP;100OHM,5%,1/10W,DA,TP,2012	
....4	RP916	2007-000290	R-CHIP;100OHM,5%,1/10W,DA,TP,2012	
....4	RP917	2007-000290	R-CHIP;100OHM,5%,1/10W,DA,TP,2012	
....4	RP918	2007-000290	R-CHIP;100OHM,5%,1/10W,DA,TP,2012	
....4	RP920	2007-000290	R-CHIP;100OHM,5%,1/10W,DA,TP,2012	
....4	RP921	2007-000290	R-CHIP;100OHM,5%,1/10W,DA,TP,2012	
....4	RP924	2007-000029	R-CHIP;0OHM,5%,1/10W,DA,TP,2012	
....4	RP925	2007-000290	R-CHIP;100OHM,5%,1/10W,DA,TP,2012	
....4	RP926	2007-000290	R-CHIP;100OHM,5%,1/10W,DA,TP,2012	
....4	RP927	2007-000290	R-CHIP;100OHM,5%,1/10W,DA,TP,2012	
....4	RP929	2007-000029	R-CHIP;0OHM,5%,1/10W,DA,TP,2012	
....4	RP931	2007-000029	R-CHIP;0OHM,5%,1/10W,DA,TP,2012	
....4	RP933	2007-000029	R-CHIP;0OHM,5%,1/10W,DA,TP,2012	
....4	RP935	2007-000029	R-CHIP;0OHM,5%,1/10W,DA,TP,2012	
....4	RP936	2007-000468	R-CHIP;1KOHM,5%,1/10W,DA,TP,2012	
....4	RP943	2007-000468	R-CHIP;1KOHM,5%,1/10W,DA,TP,2012	
....4	RP944	2007-000941	R-CHIP;47KOHM,5%,1/10W,DA,TP,2012	
....4	RP945	2007-000290	R-CHIP;100OHM,5%,1/10W,DA,TP,2012	
....4	RP980	2007-000029	R-CHIP;0OHM,5%,1/10W,DA,TP,2012	
....4	XP101	2801-003432	CRYSTAL-UNIT;20.25MHZ,30PPM,28-AAM,13PF,	
....4		AA41-00233B	PCB-PROSCAN;SVP-53J5P,FR-4,4L,B,1.6T,245	S.N.A
...3		AA63-40272A	SHIELD-CASE;-,SPTE,T0.5,-,CX724AHD	S.N.A
..2		AA95-00529A	ASSY-PCB,PIP;-,SP43J5HP,J51A,-,-,-	
...3	CNP01	3711-002709	CONNECTOR-HEADER;NOWALL,12P,1R,2.5MM,ANG	
...3	CNP03	3711-002709	CONNECTOR-HEADER;NOWALL,12P,1R,2.5MM,ANG	
⚠ ...3	ICP101	1204-000530	IC-PAL/NTSC DECODER;TDA9160A,DIP,32P,400	

Level	Loc. No.	Code No.	Description ; Specification	Remark
...3	ICP102	1204-000560	IC-DEMODULATOR;TDA9815,DIP,32P,400MIL,PL	
...3	RP126	2103-000665	VR-SEMI;20Kohm,25%,1/5W,SIDE	
...3	TP101	AA26-10004E	TRANS-IF;-,7MG,VIF,-,7mm,8pF,116.7MHz,S	
...3	ZP102	2904-000253	FILTER-SAW AV;38.9MHz,DIP10K,ST,18dB,B/G	
...3		AA99-20066Z	ASSY-PCB SUB,AUTO; AA95-00529A ,V	S.N.A
....4	CP101	2203-000221	C-CERAMIC,CHIP;100nF,20%,50V,Y5V,TP,3216	
....4	CP102	2401-000922	C-AL;22uF,20%,16V,GP,TP,5x5,5	
....4	CP103	2203-000429	C-CERAMIC,CHIP;0.018nF,5%,50V,NP0,TP,201	
....4	CP104	2203-000218	C-CERAMIC,CHIP;100nF,20%,50V,Y5V,TP,2012	
....4	CP105	2203-000717	C-CERAMIC,CHIP;3.3nF,10%,50V,X7R,TP,3216	
....4	CP106	2203-000221	C-CERAMIC,CHIP;100nF,20%,50V,Y5V,TP,3216	
....4	CP107	2203-000221	C-CERAMIC,CHIP;100nF,20%,50V,Y5V,TP,3216	
....4	CP108	2203-000221	C-CERAMIC,CHIP;100nF,20%,50V,Y5V,TP,3216	
....4	CP109	2401-001840	C-AL;100uF,20%,16V,GP,TP,6.3x11,5	
....4	CP110	2203-000221	C-CERAMIC,CHIP;100nF,20%,50V,Y5V,TP,3216	
....4	CP111	2203-000716	C-CERAMIC,CHIP;3.3nF,10%,50V,X7R,TP,2012	
....4	CP112	2401-000660	C-AL;2.2uF,20%,50V,GP,TP,5x11,5	
....4	CP114	2203-000221	C-CERAMIC,CHIP;100nF,20%,50V,Y5V,TP,3216	
....4	CP115	2203-000221	C-CERAMIC,CHIP;100nF,20%,50V,Y5V,TP,3216	
....4	CP116	2203-000753	C-CERAMIC,CHIP;330nF,+80-20%,50V,Y5V,TP,	
....4	CP117	2401-002144	C-AL;47uF,20%,16V,GP,TP,5x11,5	
....4	CP118	2203-000221	C-CERAMIC,CHIP;100nF,20%,50V,Y5V,TP,3216	
....4	CP119	2201-000692	C-CERAMIC,DISC;0.008nF,0.5pF,50V,UJ,TP,4	
....4	CP120	2203-000578	C-CERAMIC,CHIP;220nF,20%,50V,Y5V,TP,3216	
....4	CP121	2401-000660	C-AL;2.2uF,20%,50V,GP,TP,5x11,5	
....4	CP123	2203-000260	C-CERAMIC,CHIP;10nF,10%,50V,X7R,TP,2012	
....4	CP124	2401-000660	C-AL;2.2uF,20%,50V,GP,TP,5x11,5	
....4	CP125	2203-000260	C-CERAMIC,CHIP;10nF,10%,50V,X7R,TP,2012	
....4	CP126	2401-001840	C-AL;100uF,20%,16V,GP,TP,6.3x11,5	
....4	CP127	2203-000221	C-CERAMIC,CHIP;100nF,20%,50V,Y5V,TP,3216	
....4	CP129	2203-000260	C-CERAMIC,CHIP;10nF,10%,50V,X7R,TP,2012	
....4	CP130	2203-000239	C-CERAMIC,CHIP;0.1nF,5%,50V,NP0,TP,2012	
....4	CP131	2201-000692	C-CERAMIC,DISC;0.008nF,0.5pF,50V,UJ,TP,4	
....4	CP132	2203-000239	C-CERAMIC,CHIP;0.1nF,5%,50V,NP0,TP,2012	
....4	CP133	2203-000221	C-CERAMIC,CHIP;100nF,20%,50V,Y5V,TP,3216	
....4	CP134	2401-001840	C-AL;100uF,20%,16V,GP,TP,6.3x11,5	
....4	CP135	2401-002144	C-AL;47uF,20%,16V,GP,TP,5x11,5	
....4	CP136	2203-000260	C-CERAMIC,CHIP;10nF,10%,50V,X7R,TP,2012	
....4	CP137	2203-000938	C-CERAMIC,CHIP;0.47nF,5%,50V,NP0,TP,2012	
....4	CP142	2401-000199	C-AL;1000uF,20%,6.3V,GP,TP,10x12.5,	
....4	CP143	2401-002144	C-AL;47uF,20%,16V,GP,TP,5x11,5	
....4	CP144	2203-000221	C-CERAMIC,CHIP;100nF,20%,50V,Y5V,TP,3216	
....4	CP145	2203-000221	C-CERAMIC,CHIP;100nF,20%,50V,Y5V,TP,3216	
....4	CP201	2203-000325	C-CERAMIC,CHIP;12nF,10%,50V,X7R,TP,3216,	
....4	CP203	2401-002144	C-AL;47uF,20%,16V,GP,TP,5x11,5	
....4	CP204	2203-000221	C-CERAMIC,CHIP;100nF,20%,50V,Y5V,TP,3216	
....4	CP205	2401-001840	C-AL;100uF,20%,16V,GP,TP,6.3x11,5	
....4	CP206	2203-000221	C-CERAMIC,CHIP;100nF,20%,50V,Y5V,TP,3216	
....4	CP207	2401-001840	C-AL;100uF,20%,16V,GP,TP,6.3x11,5	
....4	CP208	2203-000221	C-CERAMIC,CHIP;100nF,20%,50V,Y5V,TP,3216	
....4	CP209	2401-001914	C-AL;1uF,20%,50V,BP,TP,5x11,5	
....4	CP210	2401-001840	C-AL;100uF,20%,16V,GP,TP,6.3x11,5	
....4	CP211	2401-000603	C-AL;1uF,20%,50V,GP,TP,5x11,5	
....4	CP213	2401-000603	C-AL;1uF,20%,50V,GP,TP,5x11,5	
....4	CP214	2203-000578	C-CERAMIC,CHIP;220nF,20%,50V,Y5V,TP,3216	
....4	CP215	2401-000603	C-AL;1uF,20%,50V,GP,TP,5x11,5	
....4	CP216	2203-000221	C-CERAMIC,CHIP;100nF,20%,50V,Y5V,TP,3216	
....4	CP217	2203-000578	C-CERAMIC,CHIP;220nF,20%,50V,Y5V,TP,3216	
....4	CP218	2203-002085	C-CERAMIC,CHIP;56nF,10%,50V,X7R,TP,2012,	
....4	CP219	2203-000495	C-CERAMIC,CHIP;2.2nF,10%,50V,X7R,TP,2012	
....4	CP220	2203-000578	C-CERAMIC,CHIP;220nF,20%,50V,Y5V,TP,3216	
....4	CP221	2203-000221	C-CERAMIC,CHIP;100nF,20%,50V,Y5V,TP,3216	
....4	CP301	2401-001840	C-AL;100uF,20%,16V,GP,TP,6.3x11,5	
....4	CP302	2203-000221	C-CERAMIC,CHIP;100nF,20%,50V,Y5V,TP,3216	
....4	CP303	2401-001840	C-AL;100uF,20%,16V,GP,TP,6.3x11,5	
....4	CP304	2203-000221	C-CERAMIC,CHIP;100nF,20%,50V,Y5V,TP,3216	
....4	CP305	2203-000389	C-CERAMIC,CHIP;0.015nF,5%,50V,NP0,TP,201	
....4	CP306	2203-000389	C-CERAMIC,CHIP;0.015nF,5%,50V,NP0,TP,201	
....4	DP101	0401-000160	DIODE-SWITCHING;ISS314,30V,100mA,USC,TP	
....4	DP103	0403-000720	DIODE-ZENER;MTZJ9.1B,9.1V,8.57-9.01V,500	
....4	DP105	0401-000160	DIODE-SWITCHING;ISS314,30V,100mA,USC,TP	
....4	DP201	0403-000334	DIODE-ZENER;UZ2.7BSA,2.7V,2.54-2.75V,500	
....4	ICP103	AA13-20004A	IC-HYBRID;-,PAP102T,SIP,6P,PRE-AMP,TP	
....4	ICP105	1204-000635	IC-PICTURE PROCESS;SDA9189X,SOP,32P,350M	
....4	ICP201	1002-000206	IC-A/D CONVERTER;SDA9187-2X,6BIT,SOP,28P	
....4	LP102	2701-000219	INDUCTOR-AXIAL;820nH,10%,2.5x3.4mm	

Level	Loc. No.	Code No.	Description ; Specification	Remark
....4	LP103	2701-000114	INDUCTOR-AXIAL;10uH,10%,2.5x3.4mm	
....4	LP104	2701-000114	INDUCTOR-AXIAL;10uH,10%,2.5x3.4mm	
....4	LP105	2701-000114	INDUCTOR-AXIAL;10uH,10%,2.5x3.4mm	
....4	LP201	2701-000197	INDUCTOR-AXIAL;5.6uH,10%,2.5x3.4mm	
....4	LP301	2701-000114	INDUCTOR-AXIAL;10uH,10%,2.5x3.4mm	
....4	PCB	AA41-11003A	PCB-PIP;SCT53A,2L,FR-4,330x245x1.6T,A6	S.N.A
....4	QP104	0501-000342	TR-SMALL SIGNAL;KSC1623-Y,NPN,200mW,SOT-	
....4	QP105	0501-000342	TR-SMALL SIGNAL;KSC1623-Y,NPN,200mW,SOT-	
....4	QP106	0501-000342	TR-SMALL SIGNAL;KSC1623-Y,NPN,200mW,SOT-	
....4	QP201	0501-000342	TR-SMALL SIGNAL;KSC1623-Y,NPN,200mW,SOT-	
....4	QP202	0501-000342	TR-SMALL SIGNAL;KSC1623-Y,NPN,200mW,SOT-	
....4	QP203	0501-000280	TR-SMALL SIGNAL;KSA1182,PNP,150mW,SOT-23	
....4	QP204	0501-000342	TR-SMALL SIGNAL;KSC1623-Y,NPN,200mW,SOT-	
....4	QP205	0501-000342	TR-SMALL SIGNAL;KSC1623-Y,NPN,200mW,SOT-	
....4	QP206	0501-000342	TR-SMALL SIGNAL;KSC1623-Y,NPN,200mW,SOT-	
....4	QP302	0501-000342	TR-SMALL SIGNAL;KSC1623-Y,NPN,200mW,SOT-	
....4	QP303	0501-000280	TR-SMALL SIGNAL;KSA1182,PNP,150mW,SOT-23	
....4	QP304	0501-000280	TR-SMALL SIGNAL;KSA1182,PNP,150mW,SOT-23	
....4	QP305	0501-000280	TR-SMALL SIGNAL;KSA1182,PNP,150mW,SOT-23	
....4	RC129	2007-000586	R-CHIP;22KOHM,5%,1/10W,DA,TP,2012	
....4	RP101	2007-001208	R-CHIP;82KOHM,5%,1/10W,DA,TP,2012	
....4	RP104	2007-000468	R-CHIP;1KOHM,5%,1/10W,DA,TP,2012	
....4	RP105	2007-000328	R-CHIP;11KOHM,5%,1/10W,DA,TP,2012	
....4	RP106	2007-000774	R-CHIP;33KOHM,5%,1/10W,DA,TP,2012	
....4	RP107	2007-000409	R-CHIP;15KOHM,5%,1/10W,DA,TP,2012	
....4	RP108	2007-000493	R-CHIP;2.2KOHM,5%,1/10W,DA,TP,2012	
....4	RP109	2007-000830	R-CHIP;39KOHM,5%,1/10W,DA,TP,2012	
....4	RP110	2007-000300	R-CHIP;10KOHM,5%,1/10W,DA,TP,2012	
....4	RP111	2007-000872	R-CHIP;4.7KOHM,5%,1/10W,DA,TP,2012	
....4	RP112	2007-000931	R-CHIP;470OHM,5%,1/10W,DA,TP,2012	
....4	RP113	2007-000774	R-CHIP;33KOHM,5%,1/10W,DA,TP,2012	
....4	RP114	2007-000290	R-CHIP;100OHM,5%,1/10W,DA,TP,2012	
....4	RP115	2007-000290	R-CHIP;100OHM,5%,1/10W,DA,TP,2012	
....4	RP116	2007-000493	R-CHIP;2.2KOHM,5%,1/10W,DA,TP,2012	
....4	RP118	2001-000117	R-CARBON(S);68OHM,5%,1/2W,AA,TP,2.4X6.4M	
....4	RP119	2007-000282	R-CHIP;100KOHM,5%,1/10W,DA,TP,2012	
....4	RP122	2007-000300	R-CHIP;10KOHM,5%,1/10W,DA,TP,2012	
....4	RP123	2007-000941	R-CHIP;47KOHM,5%,1/10W,DA,TP,2012	
....4	RP124	2007-000941	R-CHIP;47KOHM,5%,1/10W,DA,TP,2012	
....4	RP125	2007-000401	R-CHIP;150OHM,5%,1/10W,DA,TP,2012	
....4	RP127	2007-000030	R-CHIP;560OHM,5%,1/10W,DA,TP,2012	
....4	RP128	2007-000941	R-CHIP;47KOHM,5%,1/10W,DA,TP,2012	
....4	RP130	2007-000872	R-CHIP;4.7KOHM,5%,1/10W,DA,TP,2012	
....4	RP131	2007-000586	R-CHIP;22KOHM,5%,1/10W,DA,TP,2012	
....4	RP132	2007-000468	R-CHIP;1KOHM,5%,1/10W,DA,TP,2012	
....4	RP135	2007-000468	R-CHIP;1KOHM,5%,1/10W,DA,TP,2012	
....4	RP136	2007-000872	R-CHIP;4.7KOHM,5%,1/10W,DA,TP,2012	
....4	RP137	2007-001039	R-CHIP;56KOHM,5%,1/10W,DA,TP,2012	
....4	RP138	2007-000586	R-CHIP;22KOHM,5%,1/10W,DA,TP,2012	
....4	RP140	2007-000029	R-CHIP;0OHM,5%,1/10W,DA,TP,2012	
....4	RP201	2007-001039	R-CHIP;56KOHM,5%,1/10W,DA,TP,2012	
....4	RP202	2007-000401	R-CHIP;150OHM,5%,1/10W,DA,TP,2012	
....4	RP203	2007-000703	R-CHIP;3.6KOHM,5%,1/10W,DA,TP,2012	
....4	RP204	2007-000593	R-CHIP;22OHM,5%,1/10W,DA,TP,2012	
....4	RP205	2007-000477	R-CHIP;1MOHM,5%,1/10W,DA,TP,2012	
....4	RP206	2007-000931	R-CHIP;470OHM,5%,1/10W,DA,TP,2012	
....4	RP207	2007-001009	R-CHIP;51KOHM,5%,1/10W,DA,TP,2012	
....4	RP208	2007-000774	R-CHIP;33KOHM,5%,1/10W,DA,TP,2012	
....4	RP209	2007-000401	R-CHIP;150OHM,5%,1/10W,DA,TP,2012	
....4	RP210	2007-000221	R-CHIP;1.2KOHM,5%,1/10W,DA,TP,2012	
....4	RP211	2007-001001	R-CHIP;510OHM,5%,1/10W,DA,TP,2012	
....4	RP212	2007-000931	R-CHIP;470OHM,5%,1/10W,DA,TP,2012	
....4	RP213	2007-000872	R-CHIP;4.7KOHM,5%,1/10W,DA,TP,2012	
....4	RP215	2007-000872	R-CHIP;4.7KOHM,5%,1/10W,DA,TP,2012	
....4	RP216	2007-000872	R-CHIP;4.7KOHM,5%,1/10W,DA,TP,2012	
....4	RP217	2007-000409	R-CHIP;15KOHM,5%,1/10W,DA,TP,2012	
....4	RP301	2007-000290	R-CHIP;100OHM,5%,1/10W,DA,TP,2012	
....4	RP303	2007-000468	R-CHIP;1KOHM,5%,1/10W,DA,TP,2012	
....4	RP304	2007-000290	R-CHIP;100OHM,5%,1/10W,DA,TP,2012	
....4	RP307	2007-000518	R-CHIP;2.7KOHM,5%,1/10W,DA,TP,2012	
....4	RP308	2007-000401	R-CHIP;150OHM,5%,1/10W,DA,TP,2012	
....4	RP309	2007-000931	R-CHIP;470OHM,5%,1/10W,DA,TP,2012	
....4	RP310	2007-000931	R-CHIP;470OHM,5%,1/10W,DA,TP,2012	
....4	RP311	2007-000931	R-CHIP;470OHM,5%,1/10W,DA,TP,2012	
....4	RP312	2007-000300	R-CHIP;10KOHM,5%,1/10W,DA,TP,2012	
....4	RP313	2007-001155	R-CHIP;750OHM,5%,1/10W,DA,TP,2012	

Level	Loc. No.	Code No.	Description ; Specification	Remark
....4	RP314	2007-001155	R-CHIP;750OHM,5%,1/10W,DA,TP,2012	
....4	RP315	2007-001155	R-CHIP;750OHM,5%,1/10W,DA,TP,2012	
....4	RP316	2001-001146	R-CARBON(S);4.7OHM,5%,1/2W,AA,TP,2.4X6.4	
....4	RP317	2001-001146	R-CARBON(S);4.7OHM,5%,1/2W,AA,TP,2.4X6.4	
....4	XP101	2801-000235	CRYSTAL-UNIT;3.579545MHz,40ppm,28-AAM,S,	
....4	XP102	2801-000274	CRYSTAL-UNIT;4.433619MHZ,30PPM,28-AAM,20	
....4	XP301	2802-000121	RESONATOR-CERAMIC;20.48MHz,0.5%,TP,10.0x	
...3		AA63-40013A	SHIELD-CASE;-,SPTE,T0.5,SCT51A,WZ74,-	S.N.A
...3		0202-000187	SOLDER-WIRE FLUX;-,RS60S,D1.2,63Sn/37Pb	S.N.A
..2		AA95-00644A	ASSY-PCB,TTX;-,SP43J5HF,J51A,-,-,ENG VER	
...3	CNT01	3711-002709	CONNECTOR-HEADER;NOWALL,12P,1R,2.5MM,ANG	
...3	CNT02	3711-002707	CONNECTOR-HEADER;NOWALL,9P,1R,2.5mm,ANGL	
⚠ ...3	ICT01	AA13-00046A	IC-MCU;SDA545x-OTP 13B,OTP,ST,64K,-,D	
⚠ ...3	ICT02	1103-001197	IC-EEPROM;24C04-PC C,256X8Bit,DIP,8P,300	
⚠ ...3	ICT04	1001-000223	IC-VIDEO SWITCH;TEA5114A,-,DIP,16P,334MI	
...3	XT01	2801-000724	CRYSTAL-UNIT;6MHz,50ppm,28-AAM,20pF,40oh	
...3		AA99-20079Q	ASSY-PCB SUB,AUTO; AA99-30187G ,V	S.N.A
....4	CT01	2401-002009	C-AL;100uF,20%,16V,GP,TP,6.3x7,5	
....4	CT02	2203-000218	C-CERAMIC,CHIP;100nF,20%,50V,Y5V,TP,2012	
....4	CT03	2203-000218	C-CERAMIC,CHIP;100nF,20%,50V,Y5V,TP,2012	
....4	CT04	2203-000818	C-CERAMIC,CHIP;0.033nF,5%,50V,NP0,TP,201	
....4	CT05	2203-000818	C-CERAMIC,CHIP;0.033nF,5%,50V,NP0,TP,201	
....4	CT06	2401-000486	C-AL;10uF,20%,50V,GP,TP,6.3x7mm,5	
....4	CT07	2203-000802	C-CERAMIC,CHIP;33nF,10%,50V,X7R,TP,2012	
....4	CT08	2401-002009	C-AL;100uF,20%,16V,GP,TP,6.3x7,5	
....4	CT09	2203-000218	C-CERAMIC,CHIP;100nF,20%,50V,Y5V,TP,2012	
....4	CT10	2203-000260	C-CERAMIC,CHIP;10nF,10%,50V,X7R,TP,2012	
....4	CT12	2203-000802	C-CERAMIC,CHIP;33nF,10%,50V,X7R,TP,2012	
....4	CT13	2401-002009	C-AL;100uF,20%,16V,GP,TP,6.3x7,5	
....4	CT14	2203-000218	C-CERAMIC,CHIP;100nF,20%,50V,Y5V,TP,2012	
....4	CT15	2203-000575	C-CERAMIC,CHIP;220NF,10%,25V,X7R,TP,2012	
....4	CT16	2203-000575	C-CERAMIC,CHIP;220NF,10%,25V,X7R,TP,2012	
....4	CT17	2203-000575	C-CERAMIC,CHIP;220NF,10%,25V,X7R,TP,2012	
....4	CT18	2203-000575	C-CERAMIC,CHIP;220NF,10%,25V,X7R,TP,2012	
....4	CT19	2203-000575	C-CERAMIC,CHIP;220NF,10%,25V,X7R,TP,2012	
....4	CT20	2203-000575	C-CERAMIC,CHIP;220NF,10%,25V,X7R,TP,2012	
....4	CT21	2401-000302	C-AL;100uF,20%,25V,GP,TP,6.3x11,5	
....4	CT22	2203-000218	C-CERAMIC,CHIP;100nF,20%,50V,Y5V,TP,2012	
....4	CT23	2401-002009	C-AL;100uF,20%,16V,GP,TP,6.3x7,5	
....4	CT24	2203-000218	C-CERAMIC,CHIP;100nF,20%,50V,Y5V,TP,2012	
....4	DZT01	0403-001016	DIODE-ZENER;RLZ6.2B,6.2V,5.96-6.27V,400m	
....4	DZT02	0403-001117	DIODE-ZENER;RLZ12B,5%,500mW,LL-34,TP	
⚠ 4	ICT03	1203-000515	IC-VOL. DETECTOR;7042,TO-92,3P,177MIL,PL	
⚠ 4	ICT05	0801-000410	IC-CMOS LOGIC;74HC32,OR GATE,SOP,14P,150	
....4	JT03	2007-000029	R-CHIP;0OHM,5%,1/10W,DA,TP,2012	
....4	LT01	2702-001094	INDUCTOR-RADIAL;10uH,10%,6x4mm	
....4	LT02	2702-001094	INDUCTOR-RADIAL;10uH,10%,6x4mm	
....4	LT03	2702-001094	INDUCTOR-RADIAL;10uH,10%,6x4mm	
....4	LT04	2702-001094	INDUCTOR-RADIAL;10uH,10%,6x4mm	
....4	LT05	2702-001094	INDUCTOR-RADIAL;10uH,10%,6x4mm	
....4	PCB	AA41-00276A	PCB-TTX;SP43J5MF,FR-4,2L,A,1.6T,180x24	S.N.A
....4	RT01	2007-000290	R-CHIP;100OHM,5%,1/10W,DA,TP,2012	
....4	RT02	2007-000290	R-CHIP;100OHM,5%,1/10W,DA,TP,2012	
....4	RT03	2007-000290	R-CHIP;100OHM,5%,1/10W,DA,TP,2012	
....4	RT04	2007-000300	R-CHIP;10KOHM,5%,1/10W,DA,TP,2012	
....4	RT05	2007-000300	R-CHIP;10KOHM,5%,1/10W,DA,TP,2012	
....4	RT06	2007-000300	R-CHIP;10KOHM,5%,1/10W,DA,TP,2012	
....4	RT07	2007-000872	R-CHIP;4.7KOHM,5%,1/10W,DA,TP,2012	
....4	RT08	2007-000872	R-CHIP;4.7KOHM,5%,1/10W,DA,TP,2012	
....4	RT09	2007-000872	R-CHIP;4.7KOHM,5%,1/10W,DA,TP,2012	
....4	RT10	2007-000300	R-CHIP;10KOHM,5%,1/10W,DA,TP,2012	
....4	RT11	2007-000300	R-CHIP;10KOHM,5%,1/10W,DA,TP,2012	
....4	RT12	2007-000941	R-CHIP;47KOHM,5%,1/10W,DA,TP,2012	
....4	RT13	2007-000518	R-CHIP;2.7KOHM,5%,1/10W,DA,TP,2012	
....4	RT14	2007-000653	R-CHIP;27KOHM,5%,1/10W,DA,TP,2012	
....4	RT15	2007-000477	R-CHIP;1MOHM,5%,1/10W,DA,TP,2012	
....4	RT16	2007-000290	R-CHIP;100OHM,5%,1/10W,DA,TP,2012	
....4	RT18	2007-000300	R-CHIP;10KOHM,5%,1/10W,DA,TP,2012	
....4	RT22	2007-000300	R-CHIP;10KOHM,5%,1/10W,DA,TP,2012	
....4	RT26	2007-000290	R-CHIP;100OHM,5%,1/10W,DA,TP,2012	
....4	RT27	2007-000290	R-CHIP;100OHM,5%,1/10W,DA,TP,2012	
....4	RT28	2007-000290	R-CHIP;100OHM,5%,1/10W,DA,TP,2012	
....4	RT29	2007-000290	R-CHIP;100OHM,5%,1/10W,DA,TP,2012	
....4	RT30	2007-000290	R-CHIP;100OHM,5%,1/10W,DA,TP,2012	
....4	RT31	2007-000572	R-CHIP;220OHM,5%,1/10W,DA,TP,2012	
....4	RT32	2007-000728	R-CHIP;300OHM,5%,1/10W,DA,TP,2012	
....4	RT33	2007-000572	R-CHIP;220OHM,5%,1/10W,DA,TP,2012	
....4	RT34	2007-000728	R-CHIP;300OHM,5%,1/10W,DA,TP,2012	
....4	RT35	2007-000572	R-CHIP;220OHM,5%,1/10W,DA,TP,2012	
....4	RT36	2007-000728	R-CHIP;300OHM,5%,1/10W,DA,TP,2012	
...3		0202-000187	SOLDER-WIRE FLUX;-,RS60S,D1.2,63Sn/37Pb	S.N.A
...3		0202-001004	SOLDER-CREAM;SQ-2030M SZH-1,S63A,D0.04,6	S.N.A
...3		AA63-40014A	SHIELD-CASE,T;-,SPTE,T0.5,SCT51A,-	S.N.A
..2		AA99-30202F	ASSY-PCB ROBOT; AA94-03113R ,ER	S.N.A
...3	CS810	2201-000446	C-CERAMIC,DISC;3.3nF,20%,400V,Y5U,TP,15x	
...3	CS811	2201-000446	C-CERAMIC,DISC;3.3nF,20%,400V,Y5U,TP,15x	
...3	FI101	2904-000253	FILTER-SAW AV;38.9MHz,DIP10K,ST,18dB,B/G	
...3	FI102	2904-001010	FILTER-SAW AV;32.9~33.4MHz,SIP5P,ST,14.4	
...3	H002	AA40-10006T	TUNER-F/S;TECC2849PG29A(S),PAL-B/G,TR,18	
⚠ ...3	IC501	AA96-00111L	ASSY-H/S;-,-,AA62-30013L,KA78R12,-	
....4		1203-000165	IC-POSI.ADJUST REG.;78R12,TO-220,3P,-,-,	
....4		6003-000333	SCREW-TAPTITE;RH,+,2S,M3,L10,ZPC(YEL),SW	S.N.A
....4		AA62-30013L	HEATSINK-ES;-,-,-,-,44/22,-,WHT,-,-,-,-	S.N.A
⚠ ...3	IC807	AA96-50147A	ASSY-H/S;-,TR,AA62-30012B,KA7805A,-	S.N.A
....4		1203-000274	IC-POSI.FIXED REG.;7805,TO-220,3P,-,PLAS	
....4		6003-000333	SCREW-TAPTITE;RH,+,2S,M3,L10,ZPC(YEL),SW	S.N.A
....4		AA62-30012B	HEAT SINK-ES;-,A6063 EXTR,-,-,45(16) T02	S.N.A
⚠ ...3	IC901	AA09-00093A	IC MICOM;Z9035612PSC-R50P3,SP43J5HF,52P	
⚠ ...3	IC902	1103-001106	IC-EEPROM;C81DC,1028x8Bit,DIP,8P,300MIL,	
⚠ ...3	ICS801	AA13-00024A	IC-HYBRID;-,TNY253P,-,8PIN,-,-	
⚠ ...3	ICS802	0604-001032	PHOTO-COUPLER;TR,170-260%,300mW,DIP-4,ST	
...3		AA99-10197E	ASSY-PCB MAIN,AUTO; AA99-30202F ,V	S.N.A
....4	C103	2201-000119	C-CERAMIC,DISC;100nF,+80-20%,50V,Y5V,TP,	
....4	C104	2401-001840	C-AL;100uF,20%,16V,GP,TP,6.3x11,5	
....4	C105	2401-000302	C-AL;100uF,20%,25V,GP,TP,6.3x11,5	
....4	C107	2305-000665	C-FILM,MPEF;100nF,5%,63V,TP,7.5x4.0x5.0m	
....4	C109	2201-000119	C-CERAMIC,DISC;100nF,+80-20%,50V,Y5V,TP,	
....4	C110	2401-001840	C-AL;100uF,20%,16V,GP,TP,6.3x11,5	
....4	C119	2201-000119	C-CERAMIC,DISC;100nF,+80-20%,50V,Y5V,TP,	
....4	C121	2305-000665	C-FILM,MPEF;100nF,5%,63V,TP,7.5x4.0x5.0m	
....4	C125	2401-000603	C-AL;1uF,20%,50V,GP,TP,5x11,5	
....4	C126	2201-000119	C-CERAMIC,DISC;100nF,+80-20%,50V,Y5V,TP,	
....4	C130	2201-000119	C-CERAMIC,DISC;100nF,+80-20%,50V,Y5V,TP,	
....4	C131	2305-000665	C-FILM,MPEF;100nF,5%,63V,TP,7.5x4.0x5.0m	
....4	C132	2305-000665	C-FILM,MPEF;100nF,5%,63V,TP,7.5x4.0x5.0m	
....4	C133	2401-001363	C-AL;470uF,20%,16V,GP,TP,10x12.5,5	
....4	C134	2401-002273	C-AL;220uF,20%,25V,HR,TP,10x20mm,5m	
....4	C135	2401-000287	C-AL;100uF,20%,16V,WT,TP,6.3x11,5	
....4	C136	2401-000027	C-AL;4.7uF,20%,50V,GP,TP,5x11,5	
....4	C137	2401-002212	C-AL;10uF,20%,25V,WT,TP,5x11,5	
....4	C138	2305-000665	C-FILM,MPEF;100nF,5%,63V,TP,7.5x4.0x5.0m	
....4	C139	2201-000180	C-CERAMIC,DISC;10nF,10%,50V,Y5V,TP,7x3,5	
....4	C140	2201-000292	C-CERAMIC,DISC;1nF,10%,50V,Y5P,TP,5x3.5,	
....4	C141	2201-000292	C-CERAMIC,DISC;1nF,10%,50V,Y5P,TP,5x3.5,	
....4	C142	2305-000289	C-FILM,MPEF;220nF,5%,63V,TP,-,5mm	
....4	C143	2401-000667	C-AL;2.2uF,20%,50V,WT,TP,5x11,5	
....4	C144	2201-000180	C-CERAMIC,DISC;10nF,10%,50V,Y5V,TP,7x3,5	
....4	C145	2305-000665	C-FILM,MPEF;100nF,5%,63V,TP,7.5x4.0x5.0m	
....4	C146	2305-000665	C-FILM,MPEF;100nF,5%,63V,TP,7.5x4.0x5.0m	
....4	C147	2401-000660	C-AL;2.2uF,20%,50V,GP,TP,5x11,5	
....4	C148	2305-000665	C-FILM,MPEF;100nF,5%,63V,TP,7.5x4.0x5.0m	
....4	C149	2401-000947	C-AL;22uF,20%,35V,GP,TP,5x11,5	
....4	C180	2401-002300	C-AL;47uF,20%,50V,GP,TP,6.3x11,5	
....4	C185	2401-001363	C-AL;470uF,20%,16V,GP,TP,10x12.5,5	
....4	C191	2401-002619	C-AL;47uF,20%,25V,GP,TP,5x11,5	
....4	C501	2305-000665	C-FILM,MPEF;100nF,5%,63V,TP,7.5x4.0x5.0m	
....4	C502	2401-001397	C-AL;470uF,20%,25V,GP,TP,10x16,5	
....4	C503	2305-000665	C-FILM,MPEF;100nF,5%,63V,TP,7.5x4.0x5.0m	
....4	C504	2401-000832	C-AL;220uF,20%,25V,GP,TP,8x11.5,5	
....4	C505	2305-000665	C-FILM,MPEF;100nF,5%,63V,TP,7.5x4.0x5.0m	
....4	C506	2401-002594	C-AL;220uF,20%,16V,GP,TP,8x11.5,5	
....4	C507	2305-000665	C-FILM,MPEF;100nF,5%,63V,TP,7.5x4.0x5.0m	
....4	C508	2401-002286	C-AL;470uF,20%,16V,WT,TP,10x12.5,5	
....4	C509	2305-000665	C-FILM,MPEF;100nF,5%,63V,TP,7.5x4.0x5.0m	
....4	C510	2401-000133	C-AL;1000uF,20%,16V,GP,TP,10x20,5	
....4	C511	2305-000665	C-FILM,MPEF;100nF,5%,63V,TP,7.5x4.0x5.0m	
....4	C512	2401-000689	C-AL;2200uF,20%,16V,GP,TP,13x25,5	
....4	C519	2305-000665	C-FILM,MPEF;100nF,5%,63V,TP,7.5x4.0x5.0m	
....4	C520	2401-001397	C-AL;470uF,20%,25V,GP,TP,10x16,5	
....4	C521	2305-000665	C-FILM,MPEF;100nF,5%,63V,TP,7.5x4.0x5.0m	
....4	C522	2401-002286	C-AL;470uF,20%,16V,WT,TP,10x12.5,5	
....4	C523	2201-000292	C-CERAMIC,DISC;1nF,10%,50V,Y5P,TP,5x3.5,	
....4	C537	2305-000665	C-FILM,MPEF;100nF,5%,63V,TP,7.5x4.0x5.0m	
....4	C538	2401-001840	C-AL;100uF,20%,16V,GP,TP,6.3x11,5	

Level	Loc. No.	Code No.	Description ; Specification	Remark
....4	C539	2401-001840	C-AL;100uF,20%,16V,GP,TP,6.3x11,5	
....4	C540	2305-000665	C-FILM,MPEF;100nF,5%,63V,TP,7.5x4.0x5.0m	
....4	C543	2201-000144	C-CERAMIC,DISC;0.1nF,5%,50V,NP0,TP,8.5x3	
....4	C544	2401-002144	C-AL;47uF,20%,16V,GP,TP,5x11,5	
....4	C601	2401-002299	C-AL;4.7uF,20%,50V,GP,TP,5x7,5	
....4	C602	2401-002299	C-AL;4.7uF,20%,50V,GP,TP,5x7,5	
....4	C666	2305-000665	C-FILM,MPEF;100nF,5%,63V,TP,7.5x4.0x5.0m	
....4	C667	2401-000603	C-AL;1uF,20%,50V,GP,TP,5x11,5	
....4	C668	2401-000603	C-AL;1uF,20%,50V,GP,TP,5x11,5	
....4	C669	2401-000962	C-AL;22uF,20%,50V,GP,TP,5x11,5	
....4	C670	2401-000603	C-AL;1uF,20%,50V,GP,TP,5x11,5	
....4	C671	2401-001537	C-AL;47uF,20%,25V,GP,TP,6.3x7mm,5mm	
....4	C676	2401-001192	C-AL;33uF,20%,50V,GP,TP,6.3x11,5	
....4	C686	2201-000411	C-CERAMIC,DISC;0.27nF,10%,50V,Y5P,TP,4x3	
....4	C687	2201-000411	C-CERAMIC,DISC;0.27nF,10%,50V,Y5P,TP,4x3	
....4	C688	2401-000192	C-AL;1000uF,20%,50V,GP,TP,16x25,7.5	
....4	C689	2305-000665	C-FILM,MPEF;100nF,5%,63V,TP,7.5x4.0x5.0m	
....4	C690	2305-000665	C-FILM,MPEF;100nF,5%,63V,TP,7.5x4.0x5.0m	
....4	C691	2401-000192	C-AL;1000uF,20%,50V,GP,TP,16x25,7.5	
....4	C701	2401-000027	C-AL;4.7uF,20%,50V,GP,TP,5x11,5	
....4	C801	2401-002300	C-AL;47uF,20%,50V,GP,TP,6.3x11,5	
....4	C901	2202-000796	C-CERAMIC,MLC-AXIAL;1NF,10%,50V,Y5P,TP,3	
....4	C905	2401-001496	C-AL;47uF,20%,16V,GP,TP,5x7,5	
....4	C906	2305-000149	C-FILM,MPEF;100nF,5%,100V,TP,12x12.5x6.5	
....4	C908	2201-000292	C-CERAMIC,DISC;1nF,10%,50V,Y5P,TP,5x3.5,	
....4	C909	2201-000292	C-CERAMIC,DISC;1nF,10%,50V,Y5P,TP,5x3.5,	
....4	C912	2201-000119	C-CERAMIC,DISC;100nF,+80-20%,50V,Y5V,TP,	
....4	C913	2201-000193	C-CERAMIC,DISC;0.01nF,0.25pF,50V,NP0,TP,	
....4	C914	2201-000573	C-CERAMIC,DISC;0.047nF,5%,50V,NP0,TP,5x3	
....4	C915	2201-000119	C-CERAMIC,DISC;100nF,+80-20%,50V,Y5V,TP,	
....4	C916	2401-002042	C-AL;220uF,20%,10V,GP,TP,6.3x11,5	
....4	C917	2401-002144	C-AL;47uF,20%,16V,GP,TP,5x11,5	
....4	C918	2201-000119	C-CERAMIC,DISC;100nF,+80-20%,50V,Y5V,TP,	
....4	C919	2401-000480	C-AL;10uF,20%,50V,GP,TP,5x11,5	
....4	C920	2201-000119	C-CERAMIC,DISC;100nF,+80-20%,50V,Y5V,TP,	
....4	C925	2201-000119	C-CERAMIC,DISC;100nF,+80-20%,50V,Y5V,TP,	
....4	C926	2401-000480	C-AL;10uF,20%,50V,GP,TP,5x11,5	
....4	C927	2202-000231	C-CERAMIC,MLC-AXIAL;330pF,10%,50V,Y5P,TP	
....4	C928	2202-000796	C-CERAMIC,MLC-AXIAL;1NF,10%,50V,Y5P,TP,3	
....4	CN003	3711-002642	CONNECTOR-HEADER;BOX,3P,1R,2.5MM,STRAIGH	
....4	CN402	3711-002642	CONNECTOR-HEADER;BOX,3P,1R,2.5MM,STRAIGH	
....4	CN403	3711-002642	CONNECTOR-HEADER;BOX,3P,1R,2.5MM,STRAIGH	
....4	CN404	3711-002642	CONNECTOR-HEADER;BOX,3P,1R,2.5MM,STRAIGH	
....4	CN601	3711-002643	CONNECTOR-HEADER;BOX,4P,1R,2.5MM,STRAIGH	
....4	CS801	2201-000332	C-CERAMIC,DISC;2.2nF,20%,250V,Y5U,TP,9x4	
....4	CS802	2201-000332	C-CERAMIC,DISC;2.2nF,20%,250V,Y5U,TP,9x4	
....4	CS804	2201-000119	C-CERAMIC,DISC;100nF,+80-20%,50V,Y5V,TP,	
....4	CS805	2401-002286	C-AL;470uF,20%,16V,WT,TP,10x12.5,5	
....4	CS807	2201-000119	C-CERAMIC,DISC;100nF,+80-20%,50V,Y5V,TP,	
....4	CS808	2401-002286	C-AL;470uF,20%,16V,WT,TP,10x12.5,5	
....4	CS809	2201-000556	C-CERAMIC,DISC;0.47nF,10%,500V,Y5P,TP,5.	
....4	CS812	2201-002076	C-CERAMIC,DISC;0.068nF,5%,1kV,SL,TP,8x4m	
....4	CZ144	2401-000480	C-AL;10uF,20%,50V,GP,TP,5x11,5	
....4	CZ146	2401-000832	C-AL;220uF,20%,25V,GP,TP,8x11.5,5	
....4	CZ147	2201-000193	C-CERAMIC,DISC;0.01nF,0.25pF,50V,NP0,TP,	
....4	CZ148	2201-000193	C-CERAMIC,DISC;0.01nF,0.25pF,50V,NP0,TP,	
....4	CZ149	2201-000516	C-CERAMIC,DISC;4.7nF,+100-0%,500V,Y5U,TP	
....4	CZ150	2201-000516	C-CERAMIC,DISC;4.7nF,+100-0%,500V,Y5U,TP	
....4	CZ151	2401-001513	C-AL;47uF,20%,16V,WT,TP,5x11,5	
....4	CZ152	2401-001157	C-AL;33uF,20%,160V,GP,TP,12.5x20,5	
....4	CZ153	2401-001513	C-AL;47uF,20%,16V,WT,TP,5x11,5	
....4	CZ155	2201-000604	C-CERAMIC,DISC;0.056nF,+100-0%,500V,SL,T	
....4	CZ167	2401-001220	C-AL;4.7uF,20%,160V,GP,TP,8x11.5,5	
....4	CZ167A	2401-001220	C-AL;4.7uF,20%,160V,GP,TP,8x11.5,5	
....4	D101	0401-001088	DIODE-SWITCHING;BAW76,50V,300mA,DO-35,TP	
....4	D102	0401-001088	DIODE-SWITCHING;BAW76,50V,300mA,DO-35,TP	
....4	D103	0401-001088	DIODE-SWITCHING;BAW76,50V,300mA,DO-35,TP	
....4	D501	0401-000005	DIODE-SWITCHING;1N4148,100V,200MA,DO-35,	
....4	D664	0402-000546	DIODE-RECTIFIER;TVR10G,400V,1.0A,DO-41,T	
....4	D665	0401-000005	DIODE-SWITCHING;1N4148,100V,200MA,DO-35,	
....4	D666	0401-000005	DIODE-SWITCHING;1N4148,100V,200MA,DO-35,	
....4	D667	0401-000005	DIODE-SWITCHING;1N4148,100V,200MA,DO-35,	
....4	D668	0401-000005	DIODE-SWITCHING;1N4148,100V,200MA,DO-35,	
....4	D669	0401-000005	DIODE-SWITCHING;1N4148,100V,200MA,DO-35,	
....4	D701	0401-000005	DIODE-SWITCHING;1N4148,100V,200MA,DO-35,	
....4	D702	0401-000005	DIODE-SWITCHING;1N4148,100V,200MA,DO-35,	

Level	Loc. No.	Code No.	Description ; Specification	Remark
....4	D703	0401-000005	DIODE-SWITCHING;1N4148,100V,200MA,DO-35,	
....4	D901	0401-000005	DIODE-SWITCHING;1N4148,100V,200MA,DO-35,	
....4	D902	0401-000005	DIODE-SWITCHING;1N4148,100V,200MA,DO-35,	
....4	D903	0401-000005	DIODE-SWITCHING;1N4148,100V,200MA,DO-35,	
....4	D904	0401-000005	DIODE-SWITCHING;1N4148,100V,200MA,DO-35,	
....4	D905	0401-000005	DIODE-SWITCHING;1N4148,100V,200MA,DO-35,	
....4	D906	0401-000005	DIODE-SWITCHING;1N4148,100V,200MA,DO-35,	
....4	D907	0401-000005	DIODE-SWITCHING;1N4148,100V,200MA,DO-35,	
⚠ 4	DS802	1405-000152	VARISTOR;560V,2500A,14x8.5mm,TP	
⚠ 4	DS803	0403-001322	DIODE-ZENER;MTZJ8.2B,7.78-8.19V,500mW,DO	
⚠ 4	DS804	0403-001318	DIODE-ZENER;MTZJ4.3B,4.17-4.43V,500mW,DO	
⚠ 4	DS805	0402-000534	DIODE-RECTIFIER;RG10V,400V,1.2A,DO-201,T	
⚠ 4	DS806	1405-001030	VARISTOR;120V,2500A,14x8.5mm,TP	
⚠ 4	DS807	0402-000546	DIODE-RECTIFIER;TVR10G,400V,1.0A,DO-41,T	
⚠ 4	DS808	1405-000152	VARISTOR;560V,2500A,14x8.5mm,TP	
⚠ 4	DS809	0404-001056	DIODE-SCHOTTKY;RK16,60V,1.5A,DO-204AC,TP	
⚠ 4	DS810	1405-000152	VARISTOR;560V,2500A,14x8.5mm,TP	
....4	DZ116	0401-000005	DIODE-SWITCHING;1N4148,100V,200MA,DO-35,	
....4	DZ117	0401-000005	DIODE-SWITCHING;1N4148,100V,200MA,DO-35,	
....4	DZ118	0402-000546	DIODE-RECTIFIER;TVR10G,400V,1.0A,DO-41,T	
....4	DZ119	0401-000005	DIODE-SWITCHING;1N4148,100V,200MA,DO-35,	
....4	DZ120	0402-000546	DIODE-RECTIFIER;TVR10G,400V,1.0A,DO-41,T	
....4	DZ121	0402-000546	DIODE-RECTIFIER;TVR10G,400V,1.0A,DO-41,T	
....4	DZ501	0403-000508	DIODE-ZENER;MTZJ5.6B,5.6V,5.45-5.73V,500	
....4	DZ502	0403-000508	DIODE-ZENER;MTZJ5.6B,5.6V,5.45-5.73V,500	
....4	DZ503	0403-000720	DIODE-ZENER;MTZJ9.1B,9.1V,8.57-9.01V,500	
....4	DZ504	0403-000720	DIODE-ZENER;MTZJ9.1B,9.1V,8.57-9.01V,500	
....4	DZ505	0403-000720	DIODE-ZENER;MTZJ9.1B,9.1V,8.57-9.01V,500	
....4	DZ506	0403-000508	DIODE-ZENER;MTZJ5.6B,5.6V,5.45-5.73V,500	
....4	DZ507	0403-000510	DIODE-ZENER;MTZJ6.2B,6.2V,5.96-6.27V,500	
....4	DZ508	0403-000510	DIODE-ZENER;MTZJ6.2B,6.2V,5.96-6.27V,500	
....4	DZ665	0403-001039	DIODE-ZENER;MA2560,56V,52-60V,1W,DO-41,T	
....4	DZ666	0403-001325	DIODE-ZENER;MTZJ15C,14.35-15.09V,500mW,D	
....4	DZ667	0403-001319	DIODE-ZENER;MTZJ4.7C,4.68-4.93V,500mW,DO	
....4	DZ701	0403-001140	DIODE-ZENER;RD10ESAB-T4,10V,9.19-10.30V,	
....4	DZ801	0403-000700	DIODE-ZENER;TZP33A,33V,31-35V,1W,DO-41,T	
....4	DZ901	0403-000508	DIODE-ZENER;MTZJ5.6B,5.6V,5.45-5.73V,500	
....4	DZ902	0403-000508	DIODE-ZENER;MTZJ5.6B,5.6V,5.45-5.73V,500	
....4	DZ903	0403-000508	DIODE-ZENER;MTZJ5.6B,5.6V,5.45-5.73V,500	
....4	DZ904	0403-000508	DIODE-ZENER;MTZJ5.6B,5.6V,5.45-5.73V,500	
....4	DZ905	0403-000510	DIODE-ZENER;MTZJ6.2B,6.2V,5.96-6.27V,500	
....4	DZ906	0403-000510	DIODE-ZENER;MTZJ6.2B,6.2V,5.96-6.27V,500	
....4	DZ907	0403-000510	DIODE-ZENER;MTZJ6.2B,6.2V,5.96-6.27V,500	
....4	DZ911	0403-000510	DIODE-ZENER;MTZJ6.2B,6.2V,5.96-6.27V,500	
....4	DZ912	0403-000508	DIODE-ZENER;MTZJ5.6B,5.6V,5.45-5.73V,500	
....4	DZ914	0403-000508	DIODE-ZENER;MTZJ5.6B,5.6V,5.45-5.73V,500	
....4	DZ915	0403-000508	DIODE-ZENER;MTZJ5.6B,5.6V,5.45-5.73V,500	
....4	F901	2901-000297	FILTER-EMI ON BOARD;-,3A,-,-,3.5x5,TP,-	
....4	FI103	2903-000181	FILTER-CERAMIC;BR,5.5MHz,-,-,-,TP,TPS5.5	
....4	FI104	2903-000129	FILTER-CERAMIC;BR,4.5MHz,-,-,-,TP,-	
⚠ 4	IC506	1203-000293	IC-POSI.FIXED REG.;7808,TO-220,3P,-,PLAS	
⚠ 4	IC904	1203-000515	IC-VOL. DETECTOR;7042,TO-92,3P,177MIL,PL	
....4	L101	2701-000115	INDUCTOR-AXIAL;10uH,10%,3x7mm	
....4	L103	2701-000115	INDUCTOR-AXIAL;10uH,10%,3x7mm	
....4	L106	2701-000115	INDUCTOR-AXIAL;10uH,10%,3x7mm	
....4	L107	2701-000115	INDUCTOR-AXIAL;10uH,10%,3x7mm	
....4	L108	2701-000115	INDUCTOR-AXIAL;10uH,10%,3x7mm	
....4	L109	2701-000101	INDUCTOR-AXIAL;1.2uH,10%,2.5x3.4mm	
....4	L110	2701-000115	INDUCTOR-AXIAL;10uH,10%,3x7mm	
....4	L111	2701-000120	INDUCTOR-AXIAL;12uH,10%,2.5x3.4mm	
....4	L112	2701-000299	INDUCTOR-AXIAL;13UH,10%,2.5X3.4MM	
....4	L113	AA26-10006G	TRANS-IF;-,7mG,VIF,-,7mm,8pF,77.8MHz,ST	
....4	L114	2701-000114	INDUCTOR-AXIAL;10uH,10%,2.5x3.4mm	
....4	L115	2701-000114	INDUCTOR-AXIAL;10uH,10%,2.5x3.4mm	
....4	L116	2701-000114	INDUCTOR-AXIAL;10uH,10%,2.5x3.4mm	
....4	L117	2701-000114	INDUCTOR-AXIAL;10uH,10%,2.5x3.4mm	
....4	L118	2701-000115	INDUCTOR-AXIAL;10uH,10%,3x7mm	
....4	L501	2701-000114	INDUCTOR-AXIAL;10uH,10%,2.5x3.4mm	
....4	L502	2701-000114	INDUCTOR-AXIAL;10uH,10%,2.5x3.4mm	
....4	L503	2701-000114	INDUCTOR-AXIAL;10uH,10%,2.5x3.4mm	
....4	L504	2701-000114	INDUCTOR-AXIAL;10uH,10%,2.5x3.4mm	
....4	L505	2901-000297	FILTER-EMI ON BOARD;-,3A,-,-,3.5x5,TP,-	
....4	L506	3301-000287	CORE-FERRITE BEAD;AA,3.5x1.0x6.0mm,1500,	
....4	L507	3301-000287	CORE-FERRITE BEAD;AA,3.5x1.0x6.0mm,1500,	
....4	L514	3301-000287	CORE-FERRITE BEAD;AA,3.5x1.0x6.0mm,1500,	
....4	L515	3301-000287	CORE-FERRITE BEAD;AA,3.5x1.0x6.0mm,1500,	

Level	Loc. No.	Code No.	Description ; Specification	Remark
....4	L601	2701-000114	INDUCTOR-AXIAL;10uH,10%,2.5x3.4mm	
....4	L602	2701-000114	INDUCTOR-AXIAL;10uH,10%,2.5x3.4mm	
....4	L604	3301-000287	CORE-FERRITE BEAD;AA,3.5x1.0x6.0mm,1500,	
....4	L901	2901-000297	FILTER-EMI ON BOARD;-,3A,-,-,3.5x5,TP,-	
....4	L902	2701-000115	INDUCTOR-AXIAL;10uH,10%,3x7mm	
....4	L903	2701-001040	INDUCTOR-AXIAL;10uH,10%,4.5x14mm	
....4	L907	3301-000287	CORE-FERRITE BEAD;AA,3.5x1.0x6.0mm,1500,	
....4	L909	2701-000114	INDUCTOR-AXIAL;10uH,10%,2.5x3.4mm	
....4	L910	2701-000114	INDUCTOR-AXIAL;10uH,10%,2.5x3.4mm	
....4	L911	2701-000114	INDUCTOR-AXIAL;10uH,10%,2.5x3.4mm	
....4	L912	2701-000114	INDUCTOR-AXIAL;10uH,10%,2.5x3.4mm	
....4	LD901	2701-000115	INDUCTOR-AXIAL;10uH,10%,3x7mm	
....4	LS801	2901-000297	FILTER-EMI ON BOARD;-,3A,-,-,3.5x5,TP,-	
....4	LS802	2901-000297	FILTER-EMI ON BOARD;-,3A,-,-,3.5x5,TP,-	
....4	LS803	3301-000287	CORE-FERRITE BEAD;AA,3.5x1.0x6.0mm,1500,	
....4	LZ112	2701-000002	INDUCTOR-AXIAL;100uH,10%,4.2x9.8mm	
....4	PCB	AA41-00075A	PCB-MAIN;J51A,1L,FR-1,330X245X1.6T,1A,-	S.N.A
....4	Q101	0504-000137	TR-DIGITAL;KSR1202,NPN,300mW,10K/10K,TO-	
....4	Q102	0504-000123	TR-DIGITAL;KSR1010,NPN,300mW,10K,TO-92,T	
....4	Q103	0501-000245	TR-SMALL SIGNAL;BC548C,NPN,500mW,TO-92,T	
....4	Q104	0504-000123	TR-DIGITAL;KSR1010,NPN,300mW,10K,TO-92,T	
....4	Q105	0501-000389	TR-SMALL SIGNAL;KSC815,NPN,400mW,TO-92,T	
....4	Q106	0504-000150	TR-DIGITAL;KSR2010,PNP,300mW,10K,TO-92,T	
....4	Q107	0504-000123	TR-DIGITAL;KSR1010,NPN,300mW,10K,TO-92,T	
....4	Q665	0501-000389	TR-SMALL SIGNAL;KSC815,NPN,400mW,TO-92,T	
....4	Q666	0501-000389	TR-SMALL SIGNAL;KSC815,NPN,400mW,TO-92,T	
....4	Q667	0501-000389	TR-SMALL SIGNAL;KSC815,NPN,400mW,TO-92,T	
....4	Q701	0501-000389	TR-SMALL SIGNAL;KSC815,NPN,400mW,TO-92,T	
....4	Q702	0501-000389	TR-SMALL SIGNAL;KSC815,NPN,400mW,TO-92,T	
....4	Q901	0501-000389	TR-SMALL SIGNAL;KSC815,NPN,400mW,TO-92,T	
....4	Q902	0501-000389	TR-SMALL SIGNAL;KSC815,NPN,400mW,TO-92,T	
....4	Q903	0501-000389	TR-SMALL SIGNAL;KSC815,NPN,400mW,TO-92,T	
....4	Q909	0501-000283	TR-SMALL SIGNAL;KSA539,PNP,400mW,TO-92,T	
....4	Q910	0501-000389	TR-SMALL SIGNAL;KSC815,NPN,400mW,TO-92,T	
....4	QS801	0501-000369	TR-SMALL SIGNAL;KSC2331-Y,NPN,1W,TO-92L,	
....4	QZ103	0501-000389	TR-SMALL SIGNAL;KSC815,NPN,400mW,TO-92,T	
....4	QZ104	0501-000389	TR-SMALL SIGNAL;KSC815,NPN,400mW,TO-92,T	
....4	QZ105	0501-000389	TR-SMALL SIGNAL;KSC815,NPN,400mW,TO-92,T	
....4	QZ106	0501-000283	TR-SMALL SIGNAL;KSA539,PNP,400mW,TO-92,T	
....4	R123	2001-000429	R-CARBON;1KOHM,5%,1/8W,AA,TP,1.8X3.2MM	
....4	R131	2001-000739	R-CARBON;4.7MOHM,5%,1/8W,AA,TP,1.8X3.2M	
....4	R132	2001-000739	R-CARBON;4.7MOHM,5%,1/8W,AA,TP,1.8X3.2M	
....4	R142	2001-000281	R-CARBON;100OHM,5%,1/8W,AA,TP,1.8X3.2MM	
....4	R145	2001-000890	R-CARBON;6.8KOHM,5%,1/8W,AA,TP,1.8X3.2M	
....4	R146	2001-000362	R-CARBON;150OHM,5%,1/8W,AA,TP,1.8X3.2MM	
....4	R148	2001-000290	R-CARBON;10KOHM,5%,1/8W,AA,TP,1.8X3.2MM	
....4	R149	2001-000331	R-CARBON;12KOHM,5%,1/8W,AA,TP,1.8X3.2MM	
....4	R150	2001-000290	R-CARBON;10KOHM,5%,1/8W,AA,TP,1.8X3.2MM	
....4	R151	2001-000313	R-CARBON;11KOHM,5%,1/8W,AA,TP,1.8X3.2MM	
....4	R152	2001-000449	R-CARBON;2.2KOHM,5%,1/8W,AA,TP,1.8X3.2M	
....4	R153	2001-000449	R-CARBON;2.2KOHM,5%,1/8W,AA,TP,1.8X3.2M	
....4	R154	2001-000449	R-CARBON;2.2KOHM,5%,1/8W,AA,TP,1.8X3.2M	
....4	R155	2001-000522	R-CARBON;22KOHM,5%,1/8W,AA,TP,1.8X3.2MM	
....4	R156	2001-000241	R-CARBON;1.5KOHM,5%,1/8W,AA,TP,1.8X3.2M	
....4	R157	2001-000241	R-CARBON;1.5KOHM,5%,1/8W,AA,TP,1.8X3.2M	
....4	R158	2001-000857	R-CARBON;560OHM,5%,1/8W,AA,TP,1.8X3.2MM	
....4	R159	2001-000864	R-CARBON;56KOHM,5%,1/8W,AA,TP,1.8X3.2MM	
....4	R160	2001-000786	R-CARBON;47KOHM,5%,1/8W,AA,TP,1.8X3.2MM	
....4	R161	2001-000005	R-CARBON;390ohm,5%,1/8W,AA,TP,1.8x3.2mm	
....4	R162	2001-000969	R-CARBON;75OHM,5%,1/8W,AA,TP,1.8X3.2MM	
....4	R163	2001-000515	R-CARBON;220OHM,5%,1/8W,AA,TP,1.8X3.2MM	
....4	R164	2001-000490	R-CARBON;200OHM,5%,1/8W,AA,TP,1.8X3.2MM	
....4	R165	2001-000515	R-CARBON;220OHM,5%,1/8W,AA,TP,1.8X3.2MM	
....4	R166	2001-000429	R-CARBON;1KOHM,5%,1/8W,AA,TP,1.8X3.2MM	
....4	R167	2001-000522	R-CARBON;22KOHM,5%,1/8W,AA,TP,1.8X3.2MM	
....4	R168	2001-000522	R-CARBON;22KOHM,5%,1/8W,AA,TP,1.8X3.2MM	
....4	R169	2001-000734	R-CARBON;4.7KOHM,5%,1/8W,AA,TP,1.8X3.2M	
....4	R501	2001-000066	R-CARBON(S);10KOHM,5%,1/2W,AA,TP,2.4X6.4	
....4	R502	2001-000281	R-CARBON;100OHM,5%,1/8W,AA,TP,1.8X3.2MM	
....4	R503	2001-000281	R-CARBON;100OHM,5%,1/8W,AA,TP,1.8X3.2MM	
....4	R504	2001-000405	R-CARBON;180OHM,5%,1/8W,AA,TP,1.8X3.2MM	
....4	R509	2008-000266	R-FUSIBLE(S);1ohm,5%,2W,AF,TP,3.9x10mm	
....4	R510	2008-000266	R-FUSIBLE(S);1ohm,5%,2W,AF,TP,3.9x10mm	
....4	R511	2008-001116	R-FUSIBLE(S);0.68ohm,10%,2W,AG,TP,3.9x12	
....4	R512	2001-000003	R-CARBON;330ohm,5%,1/8W,AA,TP,1.8x3.2mm	
....4	R524	2001-000739	R-CARBON;4.7MOHM,5%,1/8W,AA,TP,1.8X3.2M	
....4	R525	2001-000739	R-CARBON;4.7MOHM,5%,1/8W,AA,TP,1.8X3.2M	
....4	R526	2001-000739	R-CARBON;4.7MOHM,5%,1/8W,AA,TP,1.8X3.2M	
....4	R531	2001-000739	R-CARBON;4.7MOHM,5%,1/8W,AA,TP,1.8X3.2M	
....4	R532	2001-000037	R-CARBON(S);330OHM,5%,1/2W,AA,TP,2.4X6.4	
....4	R533	2001-000739	R-CARBON;4.7MOHM,5%,1/8W,AA,TP,1.8X3.2M	
....4	R601	2001-000109	R-CARBON(S);470OHM,5%,1/2W,AA,TP,2.4X6.4	
....4	R602	2001-000605	R-CARBON;3.6KOHM,5%,1/8W,AA,TP,1.8X3.2M	
....4	R603	2001-000734	R-CARBON;4.7KOHM,5%,1/8W,AA,TP,1.8X3.2M	
....4	R661	2001-001093	R-CARBON(S);2.2KOHM,5%,1/2W,AA,TP,2.4X6.	
....4	R662	2001-001093	R-CARBON(S);2.2KOHM,5%,1/2W,AA,TP,2.4X6.	
....4	R665	2001-001188	R-CARBON(S);8.2KOHM,5%,1/2W,AA,TP,2.4X6.	
....4	R666	2001-001188	R-CARBON(S);8.2KOHM,5%,1/2W,AA,TP,2.4X6.	
....4	R668	2001-000028	R-CARBON(S);100OHM,5%,1/2W,AA,TP,2.4X6.4	
....4	R669	2001-001144	R-CARBON(S);4.7KOHM,5%,1/2W,AA,TP,2.4X6.	
....4	R670	2001-000085	R-CARBON(S);100KOHM,5%,1/2W,AA,TP,2.4X6.	
....4	R671	2001-000066	R-CARBON(S);10KOHM,5%,1/2W,AA,TP,2.4X6.4	
....4	R672	2001-000066	R-CARBON(S);10KOHM,5%,1/2W,AA,TP,2.4X6.4	
....4	R673	2001-000411	R-CARBON;18KOHM,5%,1/8W,AA,TP,1.8X3.2MM	
....4	R674	2001-000780	R-CARBON;470OHM,5%,1/8W,AA,TP,1.8X3.2MM	
....4	R675	2001-000066	R-CARBON(S);10KOHM,5%,1/2W,AA,TP,2.4X6.4	
....4	R676	2001-000812	R-CARBON;5.6KOHM,5%,1/8W,AA,TP,1.8X3.2M	
....4	R677	2001-000290	R-CARBON;10KOHM,5%,1/8W,AA,TP,1.8X3.2MM	
....4	R678	2001-000008	R-CARBON;15KOHM,5%,1/8W,AA,TP,1.8X3.2MM	
....4	R679	2001-001071	R-CARBON(S);12KOHM,5%,1/2W,AA,TP,2.4X6.4	
....4	R680	2001-001000	R-CARBON;82KOHM,5%,1/8W,AA,TP,1.8X3.2MM	
....4	R681	2001-001093	R-CARBON(S);2.2KOHM,5%,1/2W,AA,TP,2.4X6.	
....4	R682	2004-001897	R-METAL(S);43.2Kohm,1%,1/2W,AA,TP,2.5x6.	
....4	R683	2004-001897	R-METAL(S);43.2Kohm,1%,1/2W,AA,TP,2.5x6.	
....4	R684	2001-001093	R-CARBON(S);2.2KOHM,5%,1/2W,AA,TP,2.4X6.	
....4	R685	2004-001390	R-METAL(S);1Kohm,2%,1/2W,AA,TP,2.4x6.4mm	
....4	R686	2004-001390	R-METAL(S);1Kohm,2%,1/2W,AA,TP,2.4x6.4mm	
....4	R687	2001-001146	R-CARBON(S);4.7OHM,5%,1/2W,AA,TP,2.4X6.4	
....4	R689	2001-001146	R-CARBON(S);4.7OHM,5%,1/2W,AA,TP,2.4X6.4	
....4	R690	2001-000734	R-CARBON;4.7KOHM,5%,1/8W,AA,TP,1.8X3.2M	
....4	R701	2001-000786	R-CARBON;47KOHM,5%,1/8W,AA,TP,1.8X3.2MM	
....4	R702	2001-000290	R-CARBON;10KOHM,5%,1/8W,AA,TP,1.8X3.2MM	
....4	R703	2001-000290	R-CARBON;10KOHM,5%,1/8W,AA,TP,1.8X3.2MM	
....4	R704	2001-000290	R-CARBON;10KOHM,5%,1/8W,AA,TP,1.8X3.2MM	
....4	R801	2003-001098	R-METAL OXIDE(S);22Kohm,5%,3W,AA,TP,6x16	
....4	R901	2001-000734	R-CARBON;4.7KOHM,5%,1/8W,AA,TP,1.8X3.2M	
....4	R903	2001-000429	R-CARBON;1KOHM,5%,1/8W,AA,TP,1.8X3.2MM	
....4	R904	2001-000290	R-CARBON;10KOHM,5%,1/8W,AA,TP,1.8X3.2MM	
....4	R905	2001-000734	R-CARBON;4.7KOHM,5%,1/8W,AA,TP,1.8X3.2M	
....4	R906	2001-000429	R-CARBON;1KOHM,5%,1/8W,AA,TP,1.8X3.2MM	
....4	R907	2001-000429	R-CARBON;1KOHM,5%,1/8W,AA,TP,1.8X3.2MM	
....4	R908	2001-000281	R-CARBON;100OHM,5%,1/8W,AA,TP,1.8X3.2MM	
....4	R909	2001-000281	R-CARBON;100OHM,5%,1/8W,AA,TP,1.8X3.2MM	
....4	R910	2001-000281	R-CARBON;100OHM,5%,1/8W,AA,TP,1.8X3.2MM	
....4	R912	2001-000003	R-CARBON;330ohm,5%,1/8W,AA,TP,1.8x3.2mm	
....4	R914	2001-000281	R-CARBON;100OHM,5%,1/8W,AA,TP,1.8X3.2MM	
....4	R915	2001-000281	R-CARBON;100OHM,5%,1/8W,AA,TP,1.8X3.2MM	
....4	R916	2001-000472	R-CARBON;2.7KOHM,5%,1/8W,AA,TP,1.8X3.2M	
....4	R917	2001-000472	R-CARBON;2.7KOHM,5%,1/8W,AA,TP,1.8X3.2M	
....4	R918	2001-000832	R-CARBON;510OHM,5%,1/8W,AA,TP,1.8X3.2MM	
....4	R919	2001-000591	R-CARBON;3.3KOHM,5%,1/8W,AA,TP,1.8X3.2M	
....4	R921	2001-000812	R-CARBON;5.6KOHM,5%,1/8W,AA,TP,1.8X3.2M	
....4	R922	2001-000812	R-CARBON;5.6KOHM,5%,1/8W,AA,TP,1.8X3.2M	
....4	R923	2001-000786	R-CARBON;47KOHM,5%,1/8W,AA,TP,1.8X3.2MM	
....4	R924	2001-000786	R-CARBON;47KOHM,5%,1/8W,AA,TP,1.8X3.2MM	
....4	R925	2001-000241	R-CARBON;1.5KOHM,5%,1/8W,AA,TP,1.8X3.2M	
....4	R926	2001-000241	R-CARBON;1.5KOHM,5%,1/8W,AA,TP,1.8X3.2M	
....4	R930	2001-000734	R-CARBON;4.7KOHM,5%,1/8W,AA,TP,1.8X3.2M	
....4	R931	2001-000734	R-CARBON;4.7KOHM,5%,1/8W,AA,TP,1.8X3.2M	
....4	R932	2001-000734	R-CARBON;4.7KOHM,5%,1/8W,AA,TP,1.8X3.2M	
....4	R945	2001-000429	R-CARBON;1KOHM,5%,1/8W,AA,TP,1.8X3.2MM	
....4	R946	2001-000290	R-CARBON;10KOHM,5%,1/8W,AA,TP,1.8X3.2MM	
....4	R947	2001-000290	R-CARBON;10KOHM,5%,1/8W,AA,TP,1.8X3.2MM	
....4	R948	2001-000429	R-CARBON;1KOHM,5%,1/8W,AA,TP,1.8X3.2MM	
....4	R949	2001-000591	R-CARBON;3.3KOHM,5%,1/8W,AA,TP,1.8X3.2M	
....4	R950	2001-000429	R-CARBON;1KOHM,5%,1/8W,AA,TP,1.8X3.2MM	
....4	R951	2001-000591	R-CARBON;3.3KOHM,5%,1/8W,AA,TP,1.8X3.2M	
....4	R952	2001-000281	R-CARBON;100OHM,5%,1/8W,AA,TP,1.8X3.2MM	
....4	R953	2001-000734	R-CARBON;4.7KOHM,5%,1/8W,AA,TP,1.8X3.2M	
....4	R954	2001-000281	R-CARBON;100OHM,5%,1/8W,AA,TP,1.8X3.2MM	
....4	R955	2001-000734	R-CARBON;4.7KOHM,5%,1/8W,AA,TP,1.8X3.2M	
....4	R958	2001-000281	R-CARBON;100OHM,5%,1/8W,AA,TP,1.8X3.2MM	
....4	R959	2001-000281	R-CARBON;100OHM,5%,1/8W,AA,TP,1.8X3.2MM	
....4	R960	2001-000281	R-CARBON;100OHM,5%,1/8W,AA,TP,1.8X3.2MM	

Level	Loc. No.	Code No.	Description ; Specification	Remark
....4	R961	2001-000734	R-CARBON;4.7KOHM,5%,1/8W,AA,TP,1.8X3.2M	
....4	R962	2001-000864	R-CARBON;56KOHM,5%,1/8W,AA,TP,1.8X3.2MM	
....4	R967	2001-000429	R-CARBON;1KOHM,5%,1/8W,AA,TP,1.8X3.2MM	
....4	R968	2001-000429	R-CARBON;1KOHM,5%,1/8W,AA,TP,1.8X3.2MM	
....4	R970	2001-000472	R-CARBON;2.7KOHM,5%,1/8W,AA,TP,1.8X3.2M	
....4	R971	2001-000780	R-CARBON;470OHM,5%,1/8W,AA,TP,1.8X3.2MM	
....4	R974	2001-000734	R-CARBON;4.7KOHM,5%,1/8W,AA,TP,1.8X3.2M	
....4	R977	2001-001062	R-CARBON(S);10MOHM,5%,1/2W,AA,TP,2.4X6.4	
....4	R979	2001-000281	R-CARBON;100OHM,5%,1/8W,AA,TP,1.8X3.2MM	
....4	R980	2001-000290	R-CARBON;10KOHM,5%,1/8W,AA,TP,1.8X3.2MM	
....4	R981	2001-000577	R-CARBON;2KOHM,5%,1/8W,AA,TP,1.8X3.2MM	
....4	R982	2001-000577	R-CARBON;2KOHM,5%,1/8W,AA,TP,1.8X3.2MM	
....4	R983	2001-000577	R-CARBON;2KOHM,5%,1/8W,AA,TP,1.8X3.2MM	
....4	R984	2001-000429	R-CARBON;1KOHM,5%,1/8W,AA,TP,1.8X3.2MM	
....4	R985	2001-000786	R-CARBON;47KOHM,5%,1/8W,AA,TP,1.8X3.2MM	
....4	R986	2001-000429	R-CARBON;1KOHM,5%,1/8W,AA,TP,1.8X3.2MM	
....4	R987	2001-000780	R-CARBON;470OHM,5%,1/8W,AA,TP,1.8X3.2MM	
....4	R988	2001-000281	R-CARBON;100OHM,5%,1/8W,AA,TP,1.8X3.2MM	
....4	R989	2001-000281	R-CARBON;100OHM,5%,1/8W,AA,TP,1.8X3.2MM	
....4	R990	2001-000281	R-CARBON;100OHM,5%,1/8W,AA,TP,1.8X3.2MM	
....4	R991	2001-000281	R-CARBON;100OHM,5%,1/8W,AA,TP,1.8X3.2MM	
....4	R992	2001-000472	R-CARBON;2.7KOHM,5%,1/8W,AA,TP,1.8X3.2M	
....4	R993	2001-000281	R-CARBON;100OHM,5%,1/8W,AA,TP,1.8X3.2MM	
....4	R994	2001-000281	R-CARBON;100OHM,5%,1/8W,AA,TP,1.8X3.2MM	
....4	RD901	2001-000281	R-CARBON;100OHM,5%,1/8W,AA,TP,1.8X3.2MM	
....4	RD903	2001-000734	R-CARBON;4.7KOHM,5%,1/8W,AA,TP,1.8X3.2M	
....4	RF802	2008-000294	R-FUSIBLE(S);33ohm,5%,2W,AF,TP,3.9x10mm	
....4	RS801	2003-002194	R-METAL OXIDE(S);1.8Kohm,5%,1W,AF,TP,2.5	
....4	RS802	2001-001192	R-CARBON(S);820OHM,5%,1/2W,AA,TP,2.4X6.4	
....4	RS803	2001-001159	R-CARBON(S);510OHM,5%,1/2W,AA,TP,2.4X6.4	
....4	RS804	2001-001182	R-CARBON(S);7.5KOHM,5%,1/2W,AA,TP,2.4X6.	
....4	RS805	2001-001107	R-CARBON(S);220ohm,5%,1/2W,AA,TP,2.4x6.4	
....4	RS806	2001-001159	R-CARBON(S);510OHM,5%,1/2W,AA,TP,2.4X6.4	
....4	RS807	2001-000739	R-CARBON;4.7MOHM,5%,1/8W,AA,TP,1.8X3.2M	
....4	RZ153	2008-001086	R-FUSIBLE(S);3.3ohm,5%,2W,AG,TP,3.9x12mm	
....4	RZ154	2003-000532	R-METAL OXIDE(S);18ohm,5%,2W,AF,TP,4x12m	
....4	RZ156	2001-001159	R-CARBON(S);510OHM,5%,1/2W,AA,TP,2.4X6.4	
....4	RZ165	2001-000331	R-CARBON;12KOHM,5%,1/8W,AA,TP,1.8X3.2MM	
....4	RZ166	2001-000258	R-CARBON;1.8KOHM,5%,1/8W,AA,TP,1.8X3.2M	
....4	RZ167	2001-000258	R-CARBON;1.8KOHM,5%,1/8W,AA,TP,1.8X3.2M	
....4	RZ167A	2001-000554	R-CARBON;270OHM,5%,1/8W,AA,TP,1.8X3.2MM	
....4	RZ168	2003-002157	R-METAL OXIDE;220OHM,5%,2W,AG,TP,6X16MM	
....4	RZ169	2001-000019	R-CARBON(S);10OHM,5%,1/2W,AA,TP,2.4X6.4M	
....4	RZ170	2001-000666	R-CARBON;33OHM,5%,1/8W,AA,TP,1.8X3.2MM	
....4	RZ171	2001-000666	R-CARBON;33OHM,5%,1/8W,AA,TP,1.8X3.2MM	
....4	RZ172	2001-000241	R-CARBON;1.5KOHM,5%,1/8W,AA,TP,1.8X3.2M	
....4	RZ173	2001-001139	R-CARBON(S);39KOHM,5%,1/2W,AA,TP,2.4X6.4	
....4	RZ174	2001-001139	R-CARBON(S);39KOHM,5%,1/2W,AA,TP,2.4X6.4	
....4	RZ175	2001-000241	R-CARBON;1.5KOHM,5%,1/8W,AA,TP,1.8X3.2M	
....4	RZ176	2001-000221	R-CARBON;1.2KOHM,5%,1/8W,AA,TP,1.8X3.2M	
....4	RZ177	2001-000331	R-CARBON;12KOHM,5%,1/8W,AA,TP,1.8X3.2MM	
....4	RZ178	2001-000221	R-CARBON;1.2KOHM,5%,1/8W,AA,TP,1.8X3.2M	
....4	RZ179	2003-000713	R-METAL OXIDE(S);47ohm,5%,2W,AF,TP,4x12m	
....4	RZ180	2001-001100	R-CARBON(S);2.7OHM,5%,1/2W,AA,TP,2.4X6.4	
....4	RZ181	2001-001100	R-CARBON(S);2.7OHM,5%,1/2W,AA,TP,2.4X6.4	
....4	RZ182	2003-000713	R-METAL OXIDE(S);47ohm,5%,2W,AF,TP,4x12m	
....4	RZ183	2003-002157	R-METAL OXIDE;220OHM,5%,2W,AG,TP,6X16MM	
....4	RZ184	2003-002157	R-METAL OXIDE;220OHM,5%,2W,AG,TP,6X16MM	
....4	VR101	2103-000672	VR-SEMI;20Kohm,25%,1/5W,TOP	
..2		AA95-00427A	ASSY-SOUND;-,SP43J5P3S/XTT,J51A,-,-,CHIN	
...3	CN601A	3711-003626	CONNECTOR-HEADER;NOWALL,20P,1R,2.5mm,ANG	
...3	CN602A	3711-003626	CONNECTOR-HEADER;NOWALL,20P,1R,2.5mm,ANG	
...3	LD603	2701-000170	INDUCTOR-AXIAL;3.9uH,10%,3x7mm	
...3		AA99-20060M	ASSY-PCB SUB,AUTO; AA95-00427A ,V	S.N.A
....4	C614	2401-000962	C-AL;22uF,20%,50V,GP,TP,5x11,5	
....4	C615	2203-000595	C-CERAMIC,CHIP;0.22nF,5%,50V,NP0,TP,2012	
....4	C616	2203-000938	C-CERAMIC,CHIP;0.47nF,5%,50V,NP0,TP,2012	
....4	C617	2203-000142	C-CERAMIC,CHIP;1.5nF,10%,50V,X7R,TP,2012	
....4	C618	2203-000444	C-CERAMIC,CHIP;1nF,10%,50V,X7R,TP,2012,-	
....4	C619	2203-000444	C-CERAMIC,CHIP;1nF,10%,50V,X7R,TP,2012,-	
....4	C620	2401-000660	C-AL;2.2uF,20%,50V,GP,TP,5x11,5	
....4	C621	2401-000660	C-AL;2.2uF,20%,50V,GP,TP,5x11,5	
....4	C622	2203-000701	C-CERAMIC,CHIP;0.002nF,0.25pF,50V,NP0,TP	
....4	C623	2203-000701	C-CERAMIC,CHIP;0.002nF,0.25pF,50V,NP0,TP	
....4	C624	2203-001077	C-CERAMIC,CHIP;0.056nF,5%,50V,NP0,TP,201	
....4	C625	2203-001077	C-CERAMIC,CHIP;0.056nF,5%,50V,NP0,TP,201	
....4	C626	2401-000962	C-AL;22uF,20%,50V,GP,TP,5x11,5	
....4	C627	2203-000938	C-CERAMIC,CHIP;0.47nF,5%,50V,NP0,TP,2012	
....4	C628	2203-000142	C-CERAMIC,CHIP;1.5nF,10%,50V,X7R,TP,2012	
....4	C629	2203-001077	C-CERAMIC,CHIP;0.056nF,5%,50V,NP0,TP,201	
....4	C630	2401-000480	C-AL;10uF,20%,50V,GP,TP,5x11,5	
....4	C631	2203-000218	C-CERAMIC,CHIP;100nF,20%,50V,Y5V,TP,2012	
....4	C632	2401-002229	C-AL;470nF,20%,50V,WT,TP,5x11,5	
....4	C633	2401-002229	C-AL;470nF,20%,50V,WT,TP,5x11,5	
....4	C634	2203-000784	C-CERAMIC,CHIP;0.33nF,5%,50V,NP0,TP,2012	
....4	C635	2203-000784	C-CERAMIC,CHIP;0.33nF,5%,50V,NP0,TP,2012	
....4	C636	2203-000218	C-CERAMIC,CHIP;100nF,20%,50V,Y5V,TP,2012	
....4	C637	2401-000027	C-AL;4.7uF,20%,50V,GP,TP,5x11,5	
....4	C638	2401-002235	C-AL;10uF,20%,16V,GP,TP,5x11mm,5mm	
....4	C639	2401-002235	C-AL;10uF,20%,16V,GP,TP,5x11mm,5mm	
....4	C640	2203-000938	C-CERAMIC,CHIP;0.47nF,5%,50V,NP0,TP,2012	
....4	C641	2203-000142	C-CERAMIC,CHIP;1.5nF,10%,50V,X7R,TP,2012	
....4	C642	2401-000480	C-AL;10uF,20%,50V,GP,TP,5x11,5	
....4	C643	2401-000027	C-AL;4.7uF,20%,50V,GP,TP,5x11,5	
....4	C644	2401-000027	C-AL;4.7uF,20%,50V,GP,TP,5x11,5	
....4	C645	2401-000027	C-AL;4.7uF,20%,50V,GP,TP,5x11,5	
....4	C646	2401-000027	C-AL;4.7uF,20%,50V,GP,TP,5x11,5	
....4	C649	2401-002300	C-AL;47uF,20%,50V,GP,TP,6.3x11,5	
....4	C650	2203-000979	C-CERAMIC,CHIP;47nF,10%,50V,X7R,TP,2012	
....4	C651	2401-000365	C-AL;100uF,20%,50V,WT,TP,10x12.5mm,	
....4	C653	2203-000784	C-CERAMIC,CHIP;0.33nF,5%,50V,NP0,TP,2012	
....4	C654	2401-002229	C-AL;470nF,20%,50V,WT,TP,5x11,5	
....4	C655	2203-000784	C-CERAMIC,CHIP;0.33nF,5%,50V,NP0,TP,2012	
....4	C656	2401-002229	C-AL;470nF,20%,50V,WT,TP,5x11,5	
....4	C657	2401-002229	C-AL;470nF,20%,50V,WT,TP,5x11,5	
....4	C658	2203-000784	C-CERAMIC,CHIP;0.33nF,5%,50V,NP0,TP,2012	
....4	C661	2203-000784	C-CERAMIC,CHIP;0.33nF,5%,50V,NP0,TP,2012	
....4	C662	2401-002229	C-AL;470nF,20%,50V,WT,TP,5x11,5	
....4	C663	2401-002229	C-AL;470nF,20%,50V,WT,TP,5x11,5	
....4	C664	2203-000784	C-CERAMIC,CHIP;0.33nF,5%,50V,NP0,TP,2012	
....4	C667	2203-000784	C-CERAMIC,CHIP;0.33nF,5%,50V,NP0,TP,2012	
....4	C668	2401-002229	C-AL;470nF,20%,50V,WT,TP,5x11,5	
....4	C669	2401-002229	C-AL;470nF,20%,50V,WT,TP,5x11,5	
....4	C670	2203-000784	C-CERAMIC,CHIP;0.33nF,5%,50V,NP0,TP,2012	
....4	C684	2401-000480	C-AL;10uF,20%,50V,GP,TP,5x11,5	
....4	C688	2401-000962	C-AL;22uF,20%,50V,GP,TP,5x11,5	
....4	C691	2401-000962	C-AL;22uF,20%,50V,GP,TP,5x11,5	
....4	C692	2203-000260	C-CERAMIC,CHIP;10nF,10%,50V,X7R,TP,2012	
....4	C695	2203-000761	C-CERAMIC,CHIP;330nF,10%,16V,X7R,TP,2012	
....4	C696	2203-000170	C-CERAMIC,CHIP;1.8nF,10%,50V,X7R,TP,2012	
....4	C697	2203-000170	C-CERAMIC,CHIP;1.8nF,10%,50V,X7R,TP,2012	
....4	CB1	2401-000365	C-AL;100uF,20%,50V,WT,TP,10x12.5mm,	
....4	CD601	2203-000260	C-CERAMIC,CHIP;10nF,10%,50V,X7R,TP,2012	
....4	CD602	2203-000142	C-CERAMIC,CHIP;1.5nF,10%,50V,X7R,TP,2012	
....4	CD603	2401-000962	C-AL;22uF,20%,50V,GP,TP,5x11,5	
....4	CD604	2203-000595	C-CERAMIC,CHIP;0.22nF,5%,50V,NP0,TP,2012	
....4	CD605	2203-000938	C-CERAMIC,CHIP;0.47nF,5%,50V,NP0,TP,2012	
....4	CD606	2401-000962	C-AL;22uF,20%,50V,GP,TP,5x11,5	
....4	CD607	2203-000938	C-CERAMIC,CHIP;0.47nF,5%,50V,NP0,TP,2012	
....4	CD608	2203-000142	C-CERAMIC,CHIP;1.5nF,10%,50V,X7R,TP,2012	
....4	CD609	2203-000218	C-CERAMIC,CHIP;100nF,20%,50V,Y5V,TP,2012	
....4	CD610	2401-000480	C-AL;10uF,20%,50V,GP,TP,5x11,5	
....4	CD611	2203-000218	C-CERAMIC,CHIP;100nF,20%,50V,Y5V,TP,2012	
....4	CD612	2401-000027	C-AL;4.7uF,20%,50V,GP,TP,5x11,5	
....4	CD613	2401-000660	C-AL;2.2uF,20%,50V,GP,TP,5x11,5	
....4	CD615	2401-000660	C-AL;2.2uF,20%,50V,GP,TP,5x11,5	
....4	CD616	2203-000444	C-CERAMIC,CHIP;1nF,10%,50V,X7R,TP,2012,-	
....4	CD618	2203-000444	C-CERAMIC,CHIP;1nF,10%,50V,X7R,TP,2012,-	
....4	CD619	2401-002235	C-AL;10uF,20%,16V,GP,TP,5x11mm,5mm	
....4	CD620	2401-002235	C-AL;10uF,20%,16V,GP,TP,5x11mm,5mm	
....4	CD621	2203-000938	C-CERAMIC,CHIP;0.47nF,5%,50V,NP0,TP,2012	
....4	CD622	2203-000142	C-CERAMIC,CHIP;1.5nF,10%,50V,X7R,TP,2012	
....4	CD623	2401-000480	C-AL;10uF,20%,50V,GP,TP,5x11,5	
....4	CD624	2203-000495	C-CERAMIC,CHIP;2.2nF,10%,50V,X7R,TP,2012	
....4	CD625	2401-000962	C-AL;22uF,20%,50V,GP,TP,5x11,5	
....4	CD626	2203-000495	C-CERAMIC,CHIP;2.2nF,10%,50V,X7R,TP,2012	
....4	CD627	2401-000962	C-AL;22uF,20%,50V,GP,TP,5x11,5	
....4	CD628	2203-000260	C-CERAMIC,CHIP;10nF,10%,50V,X7R,TP,2012	
....4	CD629	2401-000365	C-AL;100uF,20%,50V,WT,TP,10x12.5mm,	
....4	CD630	2203-000761	C-CERAMIC,CHIP;330nF,10%,16V,X7R,TP,2012	
....4	CDB1	2401-000365	C-AL;100uF,20%,50V,WT,TP,10x12.5mm,	
....4	IC601	1204-001689	IC-SOUND PROCESSOR;MSP3410D-C5,PLCC,68P,	

Level	Loc. No.	Code No.	Description ; Specification	Remark
....4	IC604	1201-000541	IC-OP AMP;062,SOP,8P,153MIL,DUAL,6V/mV,P	
....4	ICD601	1204-001198	IC-DECODER;DPL3519A-A2,PLCC,68P,-,PLASTI	
....4	ICD602	1201-000541	IC-OP AMP;062,SOP,8P,153MIL,DUAL,6V/mV,P	
....4	L601	2701-000170	INDUCTOR-AXIAL;3.9uH,10%,3x7mm	
....4	L602	2701-000170	INDUCTOR-AXIAL;3.9uH,10%,3x7mm	
....4	L603	2701-000112	INDUCTOR-AXIAL;100uH,10%,3x7mm	
....4	LD601	2701-000170	INDUCTOR-AXIAL;3.9uH,10%,3x7mm	
....4	LD602	2701-000112	INDUCTOR-AXIAL;100uH,10%,3x7mm	
....4	PCB	AA41-00087A	PCB-AUDIO;PLT51A,2L,FR-4,180X245X1.6T,3A	S.N.A
....4	Q606	0501-000727	TR-SMALL SIGNAL;BC848C,NPN,310mW,SOT-23,	
....4	Q607	0501-000727	TR-SMALL SIGNAL;BC848C,NPN,310mW,SOT-23,	
....4	R601	2007-000029	R-CHIP;0OHM,5%,1/10W,DA,TP,2012	
....4	R602	2007-000029	R-CHIP;0OHM,5%,1/10W,DA,TP,2012	
....4	R610	2007-000290	R-CHIP;100OHM,5%,1/10W,DA,TP,2012	
....4	R611	2007-000290	R-CHIP;100OHM,5%,1/10W,DA,TP,2012	
....4	R614	2007-000468	R-CHIP;1KOHM,5%,1/10W,DA,TP,2012	
....4	R617	2007-000931	R-CHIP;470OHM,5%,1/10W,DA,TP,2012	
....4	R618	2007-000931	R-CHIP;470OHM,5%,1/10W,DA,TP,2012	
....4	R619	2007-000290	R-CHIP;100OHM,5%,1/10W,DA,TP,2012	
....4	R620	2007-000290	R-CHIP;100OHM,5%,1/10W,DA,TP,2012	
....4	R621	2007-000290	R-CHIP;100OHM,5%,1/10W,DA,TP,2012	
....4	R622	2007-000290	R-CHIP;100OHM,5%,1/10W,DA,TP,2012	
....4	R623	2007-000477	R-CHIP;1MOHM,5%,1/10W,DA,TP,2012	
....4	R624	2007-000477	R-CHIP;1MOHM,5%,1/10W,DA,TP,2012	
....4	R625	2007-000477	R-CHIP;1MOHM,5%,1/10W,DA,TP,2012	
....4	R626	2007-000477	R-CHIP;1MOHM,5%,1/10W,DA,TP,2012	
....4	R632	2007-000931	R-CHIP;470OHM,5%,1/10W,DA,TP,2012	
....4	R633	2007-000931	R-CHIP;470OHM,5%,1/10W,DA,TP,2012	
....4	R634	2007-000931	R-CHIP;470OHM,5%,1/10W,DA,TP,2012	
....4	R635	2007-000931	R-CHIP;470OHM,5%,1/10W,DA,TP,2012	
....4	R636	2007-000931	R-CHIP;470OHM,5%,1/10W,DA,TP,2012	
....4	R637	2007-000931	R-CHIP;470OHM,5%,1/10W,DA,TP,2012	
....4	R638	2007-000931	R-CHIP;470OHM,5%,1/10W,DA,TP,2012	
....4	R660	2007-000872	R-CHIP;4.7KOHM,5%,1/10W,DA,TP,2012	
....4	R661	2007-000872	R-CHIP;4.7KOHM,5%,1/10W,DA,TP,2012	
....4	R664	2007-001177	R-CHIP;8.2KOHM,5%,1/10W,DA,TP,2012	
....4	R665	2007-000774	R-CHIP;33KOHM,5%,1/10W,DA,TP,2012	
....4	R666	2007-000872	R-CHIP;4.7KOHM,5%,1/10W,DA,TP,2012	
....4	R669	2007-001177	R-CHIP;8.2KOHM,5%,1/10W,DA,TP,2012	
....4	R670	2007-000774	R-CHIP;33KOHM,5%,1/10W,DA,TP,2012	
....4	R672	2007-000586	R-CHIP;22KOHM,5%,1/10W,DA,TP,2012	
....4	R673	2007-000586	R-CHIP;22KOHM,5%,1/10W,DA,TP,2012	
....4	R674	2007-000300	R-CHIP;10KOHM,5%,1/10W,DA,TP,2012	
....4	R675	2007-000300	R-CHIP;10KOHM,5%,1/10W,DA,TP,2012	
....4	RB1	2007-000941	R-CHIP;47KOHM,5%,1/10W,DA,TP,2012	
....4	RB2	2007-000941	R-CHIP;47KOHM,5%,1/10W,DA,TP,2012	
....4	RB3	2007-000328	R-CHIP;11KOHM,5%,1/10W,DA,TP,2012	
....4	RB4	2007-000328	R-CHIP;11KOHM,5%,1/10W,DA,TP,2012	
....4	RD601	2007-000468	R-CHIP;1KOHM,5%,1/10W,DA,TP,2012	
....4	RD602	2007-000872	R-CHIP;4.7KOHM,5%,1/10W,DA,TP,2012	
....4	RD604	2007-001177	R-CHIP;8.2KOHM,5%,1/10W,DA,TP,2012	
....4	RD605	2007-000774	R-CHIP;33KOHM,5%,1/10W,DA,TP,2012	
....4	RD610	2007-001177	R-CHIP;8.2KOHM,5%,1/10W,DA,TP,2012	
....4	RD611	2007-000774	R-CHIP;33KOHM,5%,1/10W,DA,TP,2012	
....4	RD627	2007-000872	R-CHIP;4.7KOHM,5%,1/10W,DA,TP,2012	
....4	RDB1	2007-000941	R-CHIP;47KOHM,5%,1/10W,DA,TP,2012	
....4	RDB2	2007-000941	R-CHIP;47KOHM,5%,1/10W,DA,TP,2012	
....4	RDB3	2007-000328	R-CHIP;11KOHM,5%,1/10W,DA,TP,2012	
....4	RDB4	2007-000328	R-CHIP;11KOHM,5%,1/10W,DA,TP,2012	
....4	X601	2801-000186	CRYSTAL-UNIT;18.432MHz,25ppm,28-AAM,8pF,	
...3		AA63-40273A	SHIELD-CASE;-,SPTE,T0.5,-,CX724AHD	
...3		0202-000187	SOLDER-WIRE FLUX;-,RS60S,D1.2,63Sn/37Pb	S.N.A
..2		0202-000187	SOLDER-WIRE FLUX;-,RS60S,D1.2,63Sn/37Pb	S.N.A
..2		AA65-30104B	CLAMP-WIRE;NYLON 66,V2,BLK,W2 Z5,ALL MOD	S.N.A
..2		AA65-30013A	CLAMP-WIRE;NYLON-66,V0,NTR,DAWH-45N,-,-	S.N.A
..2		AA59-40003P	MODULE-FOCUS,PACK;-,F300,NTSC,43,64x62,	
..2		3301-001201	CORE-FERRITE;AE,230.5x10.25x36mm,1500,28	
..2		AA39-20577A	LEAD CONNECTOR-ASSY;-,-,-,6(3)P,-,-,-,YF	
..2		AA39-20010C	LEAD CONNECTOR-ASSY;-,YFH800-01,S,1P,600	
..2		AA65-30105A	CLAMP-WIRE;NYLON 66,V2,NTR,15MM,ALL MODE	S.N.A
..2		AA95-00007A	ASSY-F/CONVERTER;-,SVP-434JM,KPT51A,NTSC	
...3	CON01	3711-002709	CONNECTOR-HEADER;NOWALL,12P,1R,2.5MM,ANG	
...3	CON02	3711-002703	CONNECTOR-HEADER;NOWALL,5P,1R,2.5mm,ANGL	
...3	IC03	AA13-30021E	IC-MCU;Z90234-R3911,SZM-374FC,ST,24K,	
...3	IC04	1103-001208	IC-EEPROM;AT24C02-PC27 C,256x8Bit,DIP,8P	
...3	S/CASE	AA63-40037A	SHIELD-CASE;-,SPTE,T0.5,SCT12A,-	S.N.A
...3	XTR01	2804-001213	OSCILLATOR-CLOCK;80MHz,100ppm,10TTL & CM	

Level	Loc. No.	Code No.	Description ; Specification	Remark
...3		AA99-20043V	ASSY-PCB SUB,AUTO; AA95-00007A ,V	S.N.A
....4	CF10	2203-000260	C-CERAMIC,CHIP;10nF,10%,50V,X7R,TP,2012	
....4	CF11	2401-001840	C-AL;100uF,20%,16V,GP,TP,6.3x11,5	
....4	CF12	2203-000218	C-CERAMIC,CHIP;100nF,20%,50V,Y5V,TP,2012	
....4	CF13	2401-001513	C-AL;47uF,20%,16V,WT,TP,5x11,5	
....4	CF14	2203-000218	C-CERAMIC,CHIP;100nF,20%,50V,Y5V,TP,2012	
....4	CF15	2203-000429	C-CERAMIC,CHIP;0.018nF,5%,50V,NP0,TP,201	
....4	CF16	2203-000634	C-CERAMIC,CHIP;0.022nF,5%,50V,NP0,TP,201	
....4	CF17	2203-000429	C-CERAMIC,CHIP;0.018nF,5%,50V,NP0,TP,201	
....4	CF18	2203-000683	C-CERAMIC,CHIP;0.027nF,5%,50V,NP0,TP,201	
....4	CF19	2203-000218	C-CERAMIC,CHIP;100nF,20%,50V,Y5V,TP,2012	
....4	CF21	2203-000218	C-CERAMIC,CHIP;100nF,20%,50V,Y5V,TP,2012	
....4	CF22	2203-000218	C-CERAMIC,CHIP;100nF,20%,50V,Y5V,TP,2012	
....4	CF23	2401-001513	C-AL;47uF,20%,16V,WT,TP,5x11,5	
....4	CF24	2203-000218	C-CERAMIC,CHIP;100nF,20%,50V,Y5V,TP,2012	
....4	CF25	2203-000218	C-CERAMIC,CHIP;100nF,20%,50V,Y5V,TP,2012	
....4	CF26	2203-000218	C-CERAMIC,CHIP;100nF,20%,50V,Y5V,TP,2012	
....4	CF27	2203-000218	C-CERAMIC,CHIP;100nF,20%,50V,Y5V,TP,2012	
....4	CF28	2401-001513	C-AL;47uF,20%,16V,WT,TP,5x11,5	
....4	CF29	2401-001513	C-AL;47uF,20%,16V,WT,TP,5x11,5	
....4	CF30	2203-000218	C-CERAMIC,CHIP;100nF,20%,50V,Y5V,TP,2012	
....4	CF31	2203-000218	C-CERAMIC,CHIP;100nF,20%,50V,Y5V,TP,2012	
....4	CF32	2203-000218	C-CERAMIC,CHIP;100nF,20%,50V,Y5V,TP,2012	
....4	CF33	2203-000218	C-CERAMIC,CHIP;100nF,20%,50V,Y5V,TP,2012	
....4	CF34	2203-000218	C-CERAMIC,CHIP;100nF,20%,50V,Y5V,TP,2012	
....4	CF35	2203-000218	C-CERAMIC,CHIP;100nF,20%,50V,Y5V,TP,2012	
....4	CF37	2203-000218	C-CERAMIC,CHIP;100nF,20%,50V,Y5V,TP,2012	
....4	CF38	2401-001513	C-AL;47uF,20%,16V,WT,TP,5x11,5	
....4	CF39	2203-000218	C-CERAMIC,CHIP;100nF,20%,50V,Y5V,TP,2012	
....4	CF40	2203-000218	C-CERAMIC,CHIP;100nF,20%,50V,Y5V,TP,2012	
....4	CF41	2203-000218	C-CERAMIC,CHIP;100nF,20%,50V,Y5V,TP,2012	
....4	CF42	2203-000218	C-CERAMIC,CHIP;100nF,20%,50V,Y5V,TP,2012	
....4	CF44	2404-000151	C-TA,CHIP;1uF,20%,16V,-,TP,3216,-	
....4	CF45	2203-001158	C-CERAMIC,CHIP;0.068nF,5%,50V,NP0,TP,201	
....4	CF46	2404-000151	C-TA,CHIP;1uF,20%,16V,-,TP,3216,-	
....4	CF47	2203-001158	C-CERAMIC,CHIP;0.068nF,5%,50V,NP0,TP,201	
....4	CF48	2404-000151	C-TA,CHIP;1uF,20%,16V,-,TP,3216,-	
....4	CF49	2203-001158	C-CERAMIC,CHIP;0.068nF,5%,50V,NP0,TP,201	
....4	CF50	2203-000218	C-CERAMIC,CHIP;100nF,20%,50V,Y5V,TP,2012	
....4	CF51	2203-000218	C-CERAMIC,CHIP;100nF,20%,50V,Y5V,TP,2012	
....4	CF52	2203-000316	C-CERAMIC,CHIP;0.12nF,5%,50V,NP0,TP,2012	
....4	CF53	2203-000316	C-CERAMIC,CHIP;0.12nF,5%,50V,NP0,TP,2012	
....4	CF54	2404-001229	C-TA,CHIP;4.7uF,20%,25V,GP,TP,3528	
....4	CF55	2203-000218	C-CERAMIC,CHIP;100nF,20%,50V,Y5V,TP,2012	
....4	CF56	2203-000260	C-CERAMIC,CHIP;10nF,10%,50V,X7R,TP,2012	
....4	CF57	2404-001229	C-TA,CHIP;4.7uF,20%,25V,GP,TP,3528	
....4	CF58	2203-000218	C-CERAMIC,CHIP;100nF,20%,50V,Y5V,TP,2012	
....4	CF60	2401-001840	C-AL;100uF,20%,16V,GP,TP,6.3x11,5	
....4	CF61	2203-000218	C-CERAMIC,CHIP;100nF,20%,50V,Y5V,TP,2012	
....4	CF62	2401-001513	C-AL;47uF,20%,16V,WT,TP,5x11,5	
....4	CF63	2203-000218	C-CERAMIC,CHIP;100nF,20%,50V,Y5V,TP,2012	
....4	CF64	2203-000218	C-CERAMIC,CHIP;100nF,20%,50V,Y5V,TP,2012	
....4	CF65	2203-000218	C-CERAMIC,CHIP;100nF,20%,50V,Y5V,TP,2012	
....4	CF66	2401-001513	C-AL;47uF,20%,16V,WT,TP,5x11,5	
....4	CF67	2203-000218	C-CERAMIC,CHIP;100nF,20%,50V,Y5V,TP,2012	
....4	CF68	2203-000218	C-CERAMIC,CHIP;100nF,20%,50V,Y5V,TP,2012	
....4	CF69	2203-000218	C-CERAMIC,CHIP;100nF,20%,50V,Y5V,TP,2012	
....4	CF70	2203-000218	C-CERAMIC,CHIP;100nF,20%,50V,Y5V,TP,2012	
....4	CF71	2203-000218	C-CERAMIC,CHIP;100nF,20%,50V,Y5V,TP,2012	
....4	CF72	2203-000218	C-CERAMIC,CHIP;100nF,20%,50V,Y5V,TP,2012	
....4	CF75	2401-001840	C-AL;100uF,20%,16V,GP,TP,6.3x11,5	
....4	CF76	2203-000218	C-CERAMIC,CHIP;100nF,20%,50V,Y5V,TP,2012	
....4	CF77	2203-000429	C-CERAMIC,CHIP;0.018nF,5%,50V,NP0,TP,201	
....4	CF78	2203-000429	C-CERAMIC,CHIP;0.018nF,5%,50V,NP0,TP,201	
....4	CF79	2401-000027	C-AL;4.7uF,20%,50V,GP,TP,5x11,5	
....4	CF80	2203-000218	C-CERAMIC,CHIP;100nF,20%,50V,Y5V,TP,2012	
....4	CF81	2203-000218	C-CERAMIC,CHIP;100nF,20%,50V,Y5V,TP,2012	
....4	CF84	2203-000858	C-CERAMIC,CHIP;0.039nF,5%,50V,NP0,TP,201	
....4	CF85	2203-000839	C-CERAMIC,CHIP;0.39nF,5%,50V,NP0,TP,2012	
....4	CF86	2203-000858	C-CERAMIC,CHIP;0.039nF,5%,50V,NP0,TP,201	
....4	CF87	2203-000839	C-CERAMIC,CHIP;0.39nF,5%,50V,NP0,TP,2012	
....4	CF88	2203-000858	C-CERAMIC,CHIP;0.039nF,5%,50V,NP0,TP,201	
....4	CF89	2203-000839	C-CERAMIC,CHIP;0.39nF,5%,50V,NP0,TP,2012	
....4	DF01	0401-000008	DIODE-SWITCHING;DAN217,80V,100mA,SOT-23,	
....4	DF02	0401-000008	DIODE-SWITCHING;DAN217,80V,100mA,SOT-23,	
....4	DF03	0401-000008	DIODE-SWITCHING;DAN217,80V,100mA,SOT-23,	
....4	FF13	2901-000226	FILTER-EMI SMD;25V,0.3A,-,100pF,3.2x1.25	

Level	Loc. No.	Code No.	Description ; Specification	Remark
....4	FF14	2901-000226	FILTER-EMI SMD;25V,0.3A,-,100pF,3.2x1.25	
....4	FF15	2901-000233	FILTER-EMI SMD;50V,0.3A,-,330pF,4.5x3.2x	
....4	FF16	2901-000233	FILTER-EMI SMD;50V,0.3A,-,330pF,4.5x3.2x	
....4	FF17	2901-000233	FILTER-EMI SMD;50V,0.3A,-,330pF,4.5x3.2x	
....4	IC01	1204-001406	IC-VIDEO PROCESS;FS310KBC,QFP,128P,1100M	
....4	IC02	1105-001270	IC-DRAM;72V161621,2x524Kx16BITBit,TSOP	
....4	IC05	1203-001419	IC-VOLTAGE REGULATOR;4931,TO-252,3P,6.6x	
....4	LF10	2901-000297	FILTER-EMI ON BOARD;-,3A,-,-,3.5x5,TP,-	
....4	LF11	2701-000116	INDUCTOR-AXIAL;10uH,10%,4.2x9.8mm	
....4	LF12	2701-000115	INDUCTOR-AXIAL;10uH,10%,3x7mm	
....4	LF13	2701-000115	INDUCTOR-AXIAL;10uH,10%,3x7mm	
....4	LF14	2701-000115	INDUCTOR-AXIAL;10uH,10%,3x7mm	
....4	LF15	2701-000115	INDUCTOR-AXIAL;10uH,10%,3x7mm	
....4	LF16	2701-000149	INDUCTOR-AXIAL;2.7uH,10%,2.5x3.4mm	
....4	LF17	2701-000149	INDUCTOR-AXIAL;2.7uH,10%,2.5x3.4mm	
....4	LF18	2701-000149	INDUCTOR-AXIAL;2.7uH,10%,2.5x3.4mm	
....4	PCB	AA41-10997B	PCB-FORMAT CONNERTER;KPM51A,4L,FR-4,245X	S.N.A
....4	RF11	2007-000290	R-CHIP;100OHM,5%,1/10W,DA,TP,2012	
....4	RF13	2007-000290	R-CHIP;100OHM,5%,1/10W,DA,TP,2012	
....4	RF15	2007-000290	R-CHIP;100OHM,5%,1/10W,DA,TP,2012	
....4	RF16	2007-000477	R-CHIP;1MOHM,5%,1/10W,DA,TP,2012	
....4	RF17	2007-000477	R-CHIP;1MOHM,5%,1/10W,DA,TP,2012	
....4	RF18	2007-000872	R-CHIP;4.7KOHM,5%,1/10W,DA,TP,2012	
....4	RF19	2007-000872	R-CHIP;4.7KOHM,5%,1/10W,DA,TP,2012	
....4	RF21	2007-000642	R-CHIP;270OHM,5%,1/10W,DA,TP,2012	
....4	RF22	2007-001118	R-CHIP;680OHM,5%,1/10W,DA,TP,2012	
....4	RF23	2007-000401	R-CHIP;150OHM,5%,1/10W,DA,TP,2012	
....4	RF24	2007-000401	R-CHIP;150OHM,5%,1/10W,DA,TP,2012	
....4	RF25	2007-000518	R-CHIP;2.7KOHM,5%,1/10W,DA,TP,2012	
....4	RF26	2007-000518	R-CHIP;2.7KOHM,5%,1/10W,DA,TP,2012	
....4	RF27	2007-000290	R-CHIP;100OHM,5%,1/10W,DA,TP,2012	
....4	RF29	2007-000781	R-CHIP;33OHM,5%,1/10W,DA,TP,2012	
....4	RF30	2007-000781	R-CHIP;33OHM,5%,1/10W,DA,TP,2012	
....4	RF31	2007-000781	R-CHIP;33OHM,5%,1/10W,DA,TP,2012	
....4	RF32	2007-000781	R-CHIP;33OHM,5%,1/10W,DA,TP,2012	
....4	RF33	2007-000781	R-CHIP;33OHM,5%,1/10W,DA,TP,2012	
....4	RF34	2007-000781	R-CHIP;33OHM,5%,1/10W,DA,TP,2012	
....4	RF35	2007-000781	R-CHIP;33OHM,5%,1/10W,DA,TP,2012	
....4	RF36	2007-000781	R-CHIP;33OHM,5%,1/10W,DA,TP,2012	
....4	RF37	2007-000781	R-CHIP;33OHM,5%,1/10W,DA,TP,2012	
....4	RF38	2007-000781	R-CHIP;33OHM,5%,1/10W,DA,TP,2012	
....4	RF39	2007-000781	R-CHIP;33OHM,5%,1/10W,DA,TP,2012	
....4	RF40	2007-000781	R-CHIP;33OHM,5%,1/10W,DA,TP,2012	
....4	RF41	2007-000781	R-CHIP;33OHM,5%,1/10W,DA,TP,2012	
....4	RF42	2007-000781	R-CHIP;33OHM,5%,1/10W,DA,TP,2012	
....4	RF43	2007-000781	R-CHIP;33OHM,5%,1/10W,DA,TP,2012	
....4	RF44	2007-000781	R-CHIP;33OHM,5%,1/10W,DA,TP,2012	
....4	RF45	2007-000781	R-CHIP;33OHM,5%,1/10W,DA,TP,2012	
....4	RF46	2007-000781	R-CHIP;33OHM,5%,1/10W,DA,TP,2012	
....4	RF47	2007-000781	R-CHIP;33OHM,5%,1/10W,DA,TP,2012	
....4	RF48	2007-000781	R-CHIP;33OHM,5%,1/10W,DA,TP,2012	
....4	RF49	2007-000781	R-CHIP;33OHM,5%,1/10W,DA,TP,2012	
....4	RF51	2007-000781	R-CHIP;33OHM,5%,1/10W,DA,TP,2012	
....4	RF52	2007-000781	R-CHIP;33OHM,5%,1/10W,DA,TP,2012	
....4	RF53	2007-000781	R-CHIP;33OHM,5%,1/10W,DA,TP,2012	
....4	RF54	2007-000781	R-CHIP;33OHM,5%,1/10W,DA,TP,2012	
....4	RF55	2007-000781	R-CHIP;33OHM,5%,1/10W,DA,TP,2012	
....4	RF56	2007-000781	R-CHIP;33OHM,5%,1/10W,DA,TP,2012	
....4	RF57	2007-000781	R-CHIP;33OHM,5%,1/10W,DA,TP,2012	
....4	RF58	2007-000781	R-CHIP;33OHM,5%,1/10W,DA,TP,2012	
....4	RF59	2007-000781	R-CHIP;33OHM,5%,1/10W,DA,TP,2012	
....4	RF60	2007-000781	R-CHIP;33OHM,5%,1/10W,DA,TP,2012	
....4	RF61	2007-000781	R-CHIP;33OHM,5%,1/10W,DA,TP,2012	
....4	RF62	2007-000781	R-CHIP;33OHM,5%,1/10W,DA,TP,2012	
....4	RF64	2007-000290	R-CHIP;100OHM,5%,1/10W,DA,TP,2012	
....4	RF66	2007-000781	R-CHIP;33OHM,5%,1/10W,DA,TP,2012	
....4	RF67	2007-000781	R-CHIP;33OHM,5%,1/10W,DA,TP,2012	
....4	RF68	2007-000290	R-CHIP;100OHM,5%,1/10W,DA,TP,2012	
....4	RF70	2007-000468	R-CHIP;1KOHM,5%,1/10W,DA,TP,2012	
....4	RF71	2007-000468	R-CHIP;1KOHM,5%,1/10W,DA,TP,2012	
....4	RF72	2007-000468	R-CHIP;1KOHM,5%,1/10W,DA,TP,2012	
....4	RF73	2007-000468	R-CHIP;1KOHM,5%,1/10W,DA,TP,2012	
....4	RF74	2007-000468	R-CHIP;1KOHM,5%,1/10W,DA,TP,2012	
....4	RF75	2007-000468	R-CHIP;1KOHM,5%,1/10W,DA,TP,2012	
....4	RF76	2007-000468	R-CHIP;1KOHM,5%,1/10W,DA,TP,2012	
....4	RF78	2007-000468	R-CHIP;1KOHM,5%,1/10W,DA,TP,2012	

Level	Loc. No.	Code No.	Description ; Specification	Remark
....4	RF79	2007-000468	R-CHIP;1KOHM,5%,1/10W,DA,TP,2012	
....4	RF80	2007-000468	R-CHIP;1KOHM,5%,1/10W,DA,TP,2012	
....4	RF81	2007-000872	R-CHIP;4.7KOHM,5%,1/10W,DA,TP,2012	
....4	RF82	2007-000290	R-CHIP;100OHM,5%,1/10W,DA,TP,2012	
....4	RF83	2007-000468	R-CHIP;1KOHM,5%,1/10W,DA,TP,2012	
....4	RF84	2007-000872	R-CHIP;4.7KOHM,5%,1/10W,DA,TP,2012	
....4	RF85	2007-000872	R-CHIP;4.7KOHM,5%,1/10W,DA,TP,2012	
....4	RF86	2007-001166	R-CHIP;75OHM,5%,1/10W,DA,TP,2012	
....4	RF87	2007-001166	R-CHIP;75OHM,5%,1/10W,DA,TP,2012	
....4	RF88	2007-001166	R-CHIP;75OHM,5%,1/10W,DA,TP,2012	
....4	XTR02	2801-000152	CRYSTAL-UNIT;14.31818MHz,40ppm,28-AAM,16	
....4	XTR04	2801-000724	CRYSTAL-UNIT;6MHz,50ppm,28-AAM,20pF,40oh	
..2		AA65-30109A	CLAMP-FBT;NYLON-66,V2,BLK,-,-,-	S.N.A

ASSY PCB CRT

1	*	AA95-00129L	ASSY PCB CRT;-,J51A,43,53,PAL,-	
..2	BDW-GN	AA39-20009G	LEAD CONNECTOR-ASSY;-,YFH800-01,-,1P,700	
..2	C511	2201-000969	C-CERAMIC,DISC;10nF,+80-20%,3.15kV,Y5V,T	
..2	C541	2201-000969	C-CERAMIC,DISC;10nF,+80-20%,3.15kV,Y5V,T	
..2	C571	2201-000969	C-CERAMIC,DISC;10nF,+80-20%,3.15kV,Y5V,T	
..2	CN501	3711-003051	CONNECTOR-HEADER;BOX,8P,1R,2.5mm,STRAGHT	
..2	CN502	3711-003052	CONNECTOR-HEADER;BOX,10P,1R,2.5mm,STRAGH	
..2	CN502B	3711-003052	CONNECTOR-HEADER;BOX,10P,1R,2.5mm,STRAGH	
..2	CN503	3711-003052	CONNECTOR-HEADER;BOX,10P,1R,2.5mm,STRAGH	
..2	CN503B	3711-003052	CONNECTOR-HEADER;BOX,10P,1R,2.5mm,STRAGH	
..2	CNW401	AA39-20027B	LEAD CONNECTOR-ASSY;-,67096-006,S,6P,400	
..2	CNW501	AA39-00127A	LEAD CONNECTOR-ASSY;,-,-,8P,-,-,-,35155-	
..2	CNW502	AA39-00112A	LEAD CONNECTOR-ASSY;,-,-,10P,-,-,-,35155	
..2	CNW503	AA39-00112A	LEAD CONNECTOR-ASSY;,-,-,10P,-,-,-,35155	
..2	FOCUS-	AA39-20115A	LEAD CONNECTOR-ASSY;-,BUSHING,-,1P,500,3	
..2	FOCUS-	AA39-20115A	LEAD CONNECTOR-ASSY;-,BUSHING,-,1P,500,3	
..2	FOCUS-	AA39-20115B	LEAD CONNECTOR-ASSY;-,BUSHING,-,1P,700MM	
..2	GBW-GN	3811-000446	WIRE-PVC CU;TCWA,600V,ROLL,17/0.16mm,#22	S.N.A
..2	GBW-SC	3811-000480	WIRE-PVC CU;BCWA,1KV,ROLL,17/0.16mm,#22,	S.N.A
..2	GDW-GN	AA39-20009D	LEAD CONNECTOR-ASSY;-,YFH800-01,-,1P,500	
..2	GRW-GN	3811-000446	WIRE-PVC CU;TCWA,600V,ROLL,17/0.16mm,#22	S.N.A
..2	GRW-SC	3811-000480	WIRE-PVC CU;BCWA,1KV,ROLL,17/0.16mm,#22,	S.N.A
..2	IC501	AA96-50151B	ASSY-H/S;-,AMP,AA61-10060A,TDA6111Q,-	
...3		1201-001131	IC-VIDEO AMP;6111,SIP,9P,-,SINGLE,-,PLAS	
...3		6001-000057	SCREW-MACHINE;RH,+,M3,L6,ZPC(BLK),SWRCH1	S.N.A
...3		6021-000222	NUT-HEXAGON;2C,M3,ZPC(YEL),SM20C 1	S.N.A
...3		AA61-10060A	BRACKET-TR;-,-,CUS-1 1/2H,T0.5,-,-,-	S.N.A
..2	IC531	AA96-50151B	ASSY-H/S;-,AMP,AA61-10060A,TDA6111Q,-	
..2	IC561	AA96-50151B	ASSY-H/S;-,AMP,AA61-10060A,TDA6111Q,-	
..2	PCB	AA41-10998C	PCB-CRT;P51A,1L,FR-1,330x245x1.6T,3A,M	S.N.A
..2	R506	2001-001088	R-CARBON(S);1KOHM,5%,1/2W,AA,TP,2.4X6.4M	
..2	RDW-GN	AA39-20009F	LEAD CONNECTOR-ASSY;-,YFH800-01,-,1P,200	
..2	SG502	AA27-00084A	COIL;S-23,-,-,-,-,-,-,S-23,5000Mohm	
..2	SG532	AA27-00084A	COIL;S-23,-,-,-,-,-,-,S-23,5000Mohm	
..2	SG562	AA27-00084A	COIL;S-23,-,-,-,-,-,-,S-23,5000Mohm	
..2	V501	3704-001019	SOCKET-CRT;10P,29.1PI,35.5PI,AU30U	
..2	V531	3704-001019	SOCKET-CRT;10P,29.1PI,35.5PI,AU30U	
..2	V561	3704-001019	SOCKET-CRT;10P,29.1PI,35.5PI,AU30U	
..2	VR501	2101-000321	VR-ROTARY;1Mohm,-,0.6W,SIDE	
..2	VR531	2101-000321	VR-ROTARY;1Mohm,-,0.6W,SIDE	
..2	VR561	2101-000321	VR-ROTARY;1Mohm,-,0.6W,SIDE	
..2		AA99-20082X	ASSY-PCB SUB,AUTO; AA95-00129L ,V	S.N.A
...3	C502	2401-000027	C-AL;4.7uF,20%,50V,GP,TP,5x11,5	
...3	C503	2201-000119	C-CERAMIC,DISC;100nF,+80-20%,50V,Y5V,TP,	
...3	C504	2401-001537	C-AL;47uF,20%,25V,GP,TP,6.3x7mm,5mm	
...3	C505	2305-000149	C-FILM,MPEF;100nF,5%,100V,TP,12x12.5x6.5	
...3	C506	2401-000430	C-AL;10uF,20%,250V,GP,TP,10x16mm,5m	
...3	C507	2305-000154	C-FILM,MPEF;100nF,5%,400V,TP,21.5x6.5x11	
...3	C510	2401-000430	C-AL;10uF,20%,250V,GP,TP,10x16mm,5m	
...3	C512	2401-000133	C-AL;1000uF,20%,16V,GP,TP,10x20,5	
...3	C513	2201-000983	C-CERAMIC,DISC;1nF,10%,2kV,Y5P,TP,9x5,7.	
...3	C514	2201-000599	C-CERAMIC,DISC;0.56nF,10%,500V,Y5P,TP,5.	
...3	C532	2401-000027	C-AL;4.7uF,20%,50V,GP,TP,5x11,5	
...3	C533	2201-000119	C-CERAMIC,DISC;100nF,+80-20%,50V,Y5V,TP,	
...3	C534	2401-001537	C-AL;47uF,20%,25V,GP,TP,6.3x7mm,5mm	
...3	C535	2305-000149	C-FILM,MPEF;100nF,5%,100V,TP,12x12.5x6.5	
...3	C536	2401-000430	C-AL;10uF,20%,250V,GP,TP,10x16mm,5m	
...3	C537	2305-000154	C-FILM,MPEF;100nF,5%,400V,TP,21.5x6.5x11	

Level	Loc. No.	Code No.	Description ; Specification	Remark
...3	C540	2401-000430	C-AL;10uF,20%,250V,GP,TP,10x16mm,5m	
...3	C542	2201-000983	C-CERAMIC,DISC;1nF,10%,2kV,Y5P,TP,9x5,7.	
...3	C543	2201-000599	C-CERAMIC,DISC;0.56nF,10%,500V,Y5P,TP,5.	
...3	C562	2401-000027	C-AL;4.7uF,20%,50V,GP,TP,5x11,5	
...3	C563	2201-000119	C-CERAMIC,DISC;100nF,+80-20%,50V,Y5V,TP,	
...3	C564	2401-001537	C-AL;47uF,20%,25V,GP,TP,6.3x7mm,5mm	
...3	C565	2305-000149	C-FILM,MPEF;100nF,5%,100V,TP,12x12.5x6.5	
...3	C566	2401-000430	C-AL;10uF,20%,250V,GP,TP,10x16mm,5m	
...3	C567	2305-000154	C-FILM,MPEF;100nF,5%,400V,TP,21.5x6.5x11	
...3	C570	2401-000430	C-AL;10uF,20%,250V,GP,TP,10x16mm,5m	
...3	C572	2201-000983	C-CERAMIC,DISC;1nF,10%,2kV,Y5P,TP,9x5,7.	
...3	C573	2201-000599	C-CERAMIC,DISC;0.56nF,10%,500V,Y5P,TP,5.	
...3	CN401	3711-002645	CONNECTOR-HEADER;BOX,6P,1R,2.5MM,STRAIGH	
...3	D501	0402-000546	DIODE-RECTIFIER;TVR10G,400V,1.0A,DO-41,T	
...3	D502	0402-000546	DIODE-RECTIFIER;TVR10G,400V,1.0A,DO-41,T	
...3	D503	0402-000493	DIODE-RECTIFIER;1R5GU41,400V,1.5A,DO-15L	
...3	D504	0401-000005	DIODE-SWITCHING;1N4148,100V,200MA,DO-35,	
...3	D509	0401-000005	DIODE-SWITCHING;1N4148,100V,200MA,DO-35,	
...3	D510	0401-000005	DIODE-SWITCHING;1N4148,100V,200MA,DO-35,	
...3	D531	0402-000546	DIODE-RECTIFIER;TVR10G,400V,1.0A,DO-41,T	
...3	D532	0402-000546	DIODE-RECTIFIER;TVR10G,400V,1.0A,DO-41,T	
...3	D533	0402-000493	DIODE-RECTIFIER;1R5GU41,400V,1.5A,DO-15L	
...3	D561	0402-000546	DIODE-RECTIFIER;TVR10G,400V,1.0A,DO-41,T	
...3	D562	0402-000546	DIODE-RECTIFIER;TVR10G,400V,1.0A,DO-41,T	
...3	D563	0402-000493	DIODE-RECTIFIER;1R5GU41,400V,1.5A,DO-15L	
...3	DZ501	0403-001317	DIODE-ZENER;MTZJ3.0B,3.01-3.22V,500mW,DO	
...3	DZ502	0403-000508	DIODE-ZENER;MTZJ5.6B,5.6V,5.45-5.73V,500	
...3	DZ503	0403-000708	DIODE-ZENER;MTZJ13B,13V,12.55-13.21V,500	
...3	DZ531	0403-001317	DIODE-ZENER;MTZJ3.0B,3.01-3.22V,500mW,DO	
...3	DZ532	0403-000508	DIODE-ZENER;MTZJ5.6B,5.6V,5.45-5.73V,500	
...3	DZ533	0403-000708	DIODE-ZENER;MTZJ13B,13V,12.55-13.21V,500	
...3	DZ561	0403-001317	DIODE-ZENER;MTZJ3.0B,3.01-3.22V,500mW,DO	
...3	DZ562	0403-000508	DIODE-ZENER;MTZJ5.6B,5.6V,5.45-5.73V,500	
...3	DZ563	0403-000708	DIODE-ZENER;MTZJ13B,13V,12.55-13.21V,500	
...3	L501	2701-000114	INDUCTOR-AXIAL;10uH,10%,2.5x3.4mm	
...3	L531	2701-000114	INDUCTOR-AXIAL;10uH,10%,2.5x3.4mm	
...3	L561	2701-000114	INDUCTOR-AXIAL;10uH,10%,2.5x3.4mm	
...3	Q501	0502-000006	TR-POWER;KSC1507,NPN,15W,TO-220,TP,120-	
...3	Q502	0501-000389	TR-SMALL SIGNAL;KSC815,NPN,400mW,TO-92,T	
...3	Q531	0502-000006	TR-POWER;KSC1507,NPN,15W,TO-220,TP,120-	
...3	Q561	0502-000006	TR-POWER;KSC1507,NPN,15W,TO-220,TP,120-	
...3	R500	2001-000221	R-CARBON;1.2KOHM,5%,1/8W,AA,TP,1.8X3.2M	
...3	R502	2001-000429	R-CARBON;1KOHM,5%,1/8W,AA,TP,1.8X3.2MM	
...3	R503	2001-000429	R-CARBON;1KOHM,5%,1/8W,AA,TP,1.8X3.2MM	
...3	R507	2001-000429	R-CARBON;1KOHM,5%,1/8W,AA,TP,1.8X3.2MM	
...3	R508	2003-000706	R-METAL OXIDE(S);47Kohm,5%,2W,AA,TP,4.3x	
...3	R511	2001-000009	R-CARBON;20KOHM,5%,1/8W,AA,TP,1.8X3.2MM	
...3	R513	2008-000252	R-FUSIBLE(S);0.47ohm,10%,1/2W,AF,TP,2.5x	
...3	R514	2001-001122	R-CARBON(S);3.9KOHM,5%,1/2W,AA,TP,2.4X6.	
...3	R515	2002-001017	R-COMPOSITION;1Kohm,10%,1/2W,AA,TP,3.7x9	
...3	R516	2001-000009	R-CARBON;20KOHM,5%,1/8W,AA,TP,1.8X3.2MM	
...3	R517	2001-000085	R-CARBON(S);100KOHM,5%,1/2W,AA,TP,2.4X6.	
...3	R518	2002-001021	R-COMPOSITION;560KOHM,10%,1/2W,AA,TP,3.7	
...3	R519	2002-001021	R-COMPOSITION;560KOHM,10%,1/2W,AA,TP,3.7	
...3	R520	2001-000066	R-CARBON(S);10KOHM,5%,1/2W,AA,TP,2.4X6.4	
...3	R521	2001-001052	R-CARBON(S);1.5MOHM,5%,1/2W,AA,TP,2.4X6.	
...3	R522	2002-001006	R-COMPOSITION;4.7Kohm,5%,1/2W,AA,TP,3.7x	
...3	R523	2002-001006	R-COMPOSITION;4.7Kohm,5%,1/2W,AA,TP,3.7x	
...3	R524	2001-000028	R-CARBON(S);100OHM,5%,1/2W,AA,TP,2.4X6.4	
...3	R526	2001-000539	R-CARBON;24KOHM,5%,1/8W,AA,TP,1.8X3.2MM	
...3	R527	2001-000577	R-CARBON;2KOHM,5%,1/8W,AA,TP,1.8X3.2MM	
...3	R528	2001-001015	R-CARBON;9.1KOHM,5%,1/8W,AA,TP,1.8X3.2M	
...3	R529	2002-001021	R-COMPOSITION;560KOHM,10%,1/2W,AA,TP,3.7	
...3	R532	2001-000429	R-CARBON;1KOHM,5%,1/8W,AA,TP,1.8X3.2MM	
...3	R533	2001-000429	R-CARBON;1KOHM,5%,1/8W,AA,TP,1.8X3.2MM	
...3	R536	2001-001088	R-CARBON(S);1KOHM,5%,1/2W,AA,TP,2.4X6.4M	
...3	R537	2001-000429	R-CARBON;1KOHM,5%,1/8W,AA,TP,1.8X3.2MM	
...3	R538	2003-000706	R-METAL OXIDE(S);47Kohm,5%,2W,AA,TP,4.3x	
...3	R540	2001-001000	R-CARBON;82KOHM,5%,1/8W,AA,TP,1.8X3.2MM	
...3	R541	2001-000009	R-CARBON;20KOHM,5%,1/8W,AA,TP,1.8X3.2MM	
...3	R543	2008-000252	R-FUSIBLE(S);0.47ohm,10%,1/2W,AF,TP,2.5x	
...3	R544	2001-001122	R-CARBON(S);3.9KOHM,5%,1/2W,AA,TP,2.4X6.	
...3	R545	2002-001017	R-COMPOSITION;1Kohm,10%,1/2W,AA,TP,3.7x9	
...3	R546	2001-000009	R-CARBON;20KOHM,5%,1/8W,AA,TP,1.8X3.2MM	
...3	R547	2001-000085	R-CARBON(S);100KOHM,5%,1/2W,AA,TP,2.4X6.	
...3	R548	2002-001021	R-COMPOSITION;560KOHM,10%,1/2W,AA,TP,3.7	
...3	R549	2002-001021	R-COMPOSITION;560KOHM,10%,1/2W,AA,TP,3.7	
...3	R550	2001-000066	R-CARBON(S);10KOHM,5%,1/2W,AA,TP,2.4X6.4	
...3	R551	2001-001052	R-CARBON(S);1.5MOHM,5%,1/2W,AA,TP,2.4X6.	
...3	R552	2002-001006	R-COMPOSITION;4.7Kohm,5%,1/2W,AA,TP,3.7x	
...3	R553	2002-001006	R-COMPOSITION;4.7Kohm,5%,1/2W,AA,TP,3.7x	
...3	R554	2001-000028	R-CARBON(S);100OHM,5%,1/2W,AA,TP,2.4X6.4	
...3	R559	2002-001015	R-COMPOSITION;47Kohm,5%,1/2W,AA,TP,3.7x9	
...3	R562	2001-000221	R-CARBON;1.2KOHM,5%,1/8W,AA,TP,1.8X3.2M	
...3	R563	2001-000429	R-CARBON;1KOHM,5%,1/8W,AA,TP,1.8X3.2MM	
...3	R564	2001-000837	R-CARBON;51KOHM,5%,1/8W,AA,TP,1.8X3.2MM	
...3	R566	2001-001088	R-CARBON(S);1KOHM,5%,1/2W,AA,TP,2.4X6.4M	
...3	R567	2001-000429	R-CARBON;1KOHM,5%,1/8W,AA,TP,1.8X3.2MM	
...3	R571	2001-000281	R-CARBON;100OHM,5%,1/8W,AA,TP,1.8X3.2MM	
...3	R572	2003-000706	R-METAL OXIDE(S);47Kohm,5%,2W,AA,TP,4.3x	
...3	R573	2008-000252	R-FUSIBLE(S);0.47ohm,10%,1/2W,AF,TP,2.5x	
...3	R574	2001-001122	R-CARBON(S);3.9KOHM,5%,1/2W,AA,TP,2.4X6.	
...3	R575	2002-001017	R-COMPOSITION;1Kohm,10%,1/2W,AA,TP,3.7x9	
...3	R576	2001-000009	R-CARBON;20KOHM,5%,1/8W,AA,TP,1.8X3.2MM	
...3	R577	2001-000085	R-CARBON(S);100KOHM,5%,1/2W,AA,TP,2.4X6.	
...3	R578	2002-001021	R-COMPOSITION;560KOHM,10%,1/2W,AA,TP,3.7	
...3	R579	2002-001021	R-COMPOSITION;560KOHM,10%,1/2W,AA,TP,3.7	
...3	R580	2001-000066	R-CARBON(S);10KOHM,5%,1/2W,AA,TP,2.4X6.4	
...3	R581	2001-001052	R-CARBON(S);1.5MOHM,5%,1/2W,AA,TP,2.4X6.	
...3	R582	2002-001006	R-COMPOSITION;4.7Kohm,5%,1/2W,AA,TP,3.7x	
...3	R583	2002-001006	R-COMPOSITION;4.7Kohm,5%,1/2W,AA,TP,3.7x	
...3	R584	2001-000028	R-CARBON(S);100OHM,5%,1/2W,AA,TP,2.4X6.4	
...3	R589	2002-001015	R-COMPOSITION;47Kohm,5%,1/2W,AA,TP,3.7x9	
...3	SG351	4715-001036	SURGE ABSORBER;350V,20%,-,-,TP	
...3	SG501	4715-001036	SURGE ABSORBER;350V,20%,-,-,TP	
...3	SG503	4715-001036	SURGE ABSORBER;350V,20%,-,-,TP	
...3	SG533	4715-001036	SURGE ABSORBER;350V,20%,-,-,TP	
...3	SG561	4715-001036	SURGE ABSORBER;350V,20%,-,-,TP	
...3	SG563	4715-001036	SURGE ABSORBER;350V,20%,-,-,TP	
..2		AA63-10002A	BAND-TIE;-,NYLON66 V2,-,-,L100,NTR,-,-	S.N.A
..2		0202-000187	SOLDER-WIRE FLUX;-,RS60S,D1.2,63Sn/37Pb	S.N.A

ASSY-PCB,H/V

1	*	AA95-00056C	ASSY-PCB,H/V;-,SP43J5HP3S/XTT,J51A,-,-,-	
..2	BK01	AA61-10068A	BRACKET-PCB;-,M2160,SPTE,T0.3,-,-,-	S.N.A
..2	BK02	AA61-10068A	BRACKET-PCB;-,M2160,SPTE,T0.3,-,-,-	S.N.A
..2	BK03	AA61-10068A	BRACKET-PCB;-,M2160,SPTE,T0.3,-,-,-	S.N.A
..2	CN401	3711-001049	CONNECTOR-HEADER;BOX,6P,1R,2.5mm,ANGLE,-	
..2	CN402	3711-002709	CONNECTOR-HEADER;NOWALL,12P,1R,2.5MM,ANG	
..2	CN403	AA39-20052A	LEAD CONNECTOR-ASSY;-,YBNH025-04,YSH025-	
..2	CN404	3711-001283	CONNECTOR-HEADER;NOWALL,14P,1R,2.5mm,ANG	
..2	IC471	1203-000610	IC-PWM CONTROLLER;494,DIP,16P,300MIL,PLA	
..2	L351	AA27-10003M	COIL-CHOKE;-,6100uH,J,40,34mA,TP,EL0607R	
..2	PCB	AA41-00199C	PCB-H/V MODULE;P53A,CEM-1,1L,C,1.6T,330x	S.N.A
..2	Q371	AA96-50291A	ASSY-H/S;-,-,AA62-30154B,2SC4636,-	
...3		0205-000129	GREASE-SILICON;SC102,JAPAN	S.N.A
...3		0502-000442	TR-POWER;2SC4636RB,NPN,2W,TO-220,ST,10-	
...3		6003-000333	SCREW-TAPTITE;RH,+,2S,M3,L10,ZPC(YEL),SW	S.N.A
...3		AA62-30154B	HEAT SINK-ES;-,A6063,EXTR,-,-,SILVER ANO	S.N.A
..2	Q422	0505-000156	FET-SILICON;IRF620,N,200V,5A,0.8ohm,50W,	S.N.A
..2	R425	2003-000736	R-METAL OXIDE(S);560ohm,5%,3W,AA,TP,6x16	
..2	R485	2008-001096	R-FUSIBLE(S);3.3OHM,5%,1/2W,AC,BK,2.5X6.	
..2		AA99-20071J	ASSY-PCB SUB,AUTO; AA95-00056C ,V	S.N.A
...3	C341	2401-001914	C-AL;1uF,20%,50V,BP,TP,5x11,5	
...3	C342	2401-000962	C-AL;22uF,20%,50V,GP,TP,5x11,5	
...3	C351	2301-000175	C-FILM,PEF;15nF,5%,50V,TP,7.1x3.5x13mm,5	
...3	C352	2401-000480	C-AL;10uF,20%,50V,GP,TP,5x11,5	
...3	C353	2301-000204	C-FILM,PEF;2.7nF,5%,50V,TP,7.4x3.9x13mm,	
...3	C354	2301-000261	C-FILM,PEF;4.7nF,5%,100V,TP,10.5x12.5x6.	
...3	C355	2401-000480	C-AL;10uF,20%,50V,GP,TP,5x11,5	
...3	C356	2201-000180	C-CERAMIC,DISC;10nF,10%,50V,Y5V,TP,7x3,5	
...3	C357	2401-001989	C-AL;4.7uF,20%,50V,BP,TP,5x11,5	
...3	C358	2401-000471	C-AL;10uF,20%,50V,BP,TP,5x11,5mm	
...3	C360	2305-000289	C-FILM,MPEF;220nF,5%,63V,TP,-,5mm	
...3	C361	2306-000122	C-FILM,MPPF;100nF,5%,50V,TP,7.3x4.0x5.0m	
...3	C362	2305-000149	C-FILM,MPEF;100nF,5%,100V,TP,12x12.5x6.5	
...3	C371	2401-000302	C-AL;100uF,20%,25V,GP,TP,6.3x11,5	
...3	C372	2401-000480	C-AL;10uF,20%,50V,GP,TP,5x11,5	
...3	C373	2401-000302	C-AL;100uF,20%,25V,GP,TP,6.3x11,5	
...3	C374	2401-001621	C-AL;6.8uF,20%,450V,GP,TP,13x20,5	

Level	Loc. No.	Code No.	Description ; Specification	Remark
...3	C405	2201-000558	C-CERAMIC,DISC;0.47nF,10%,50V,Y5P,TP,5x3	
...3	C406	2201-000370	C-CERAMIC,DISC;0.22nF,10%,50V,Y5P,TP,4x3	
...3	C421	2401-000302	C-AL;100uF,20%,25V,GP,TP,6.3x11,5	
...3	C429	2305-000704	C-FILM,MPEF;100nF,5%,250V,TP,16.5x10.3x5	
...3	C454	2303-000331	C-FILM,PPF;4.7nF,5%,630V,TP,19.5x12x7,7.	
...3	C455	2401-001527	C-AL;47uF,20%,250V,HR,TP,13x25mm,5m	
...3	C456	2201-000132	C-CERAMIC,DISC;0.1nF,10%,500V,Y5P,TP,6.5	
...3	C461	2201-000600	C-CERAMIC,DISC;0.56nF,10%,50V,Y5P,TP,5x3	
...3	C462	2301-000246	C-FILM,PEF;33nF,5%,100V,TP,7x5.0x9.5mm,5	
...3	C480	2306-000122	C-FILM,MPPF;100nF,5%,50V,TP,7.3x4.0x5.0m	
...3	C481	2401-000914	C-AL;22uF,20%,16V,GP,TP,5x11,5	
...3	C482	2305-000178	C-FILM,MPEF;10nF,5%,100V,TP,-,5mm	
...3	C484	2401-001026	C-AL;3.3UF,20%,50V,GP,TP,5X11,5	
...3	C485	2201-000146	C-CERAMIC,DISC;0.1nF,5%,50V,SL,TP,5x3.5,	
...3	C486	2201-000146	C-CERAMIC,DISC;0.1nF,5%,50V,SL,TP,5x3.5,	
...3	C487	2401-001026	C-AL;3.3UF,20%,50V,GP,TP,5X11,5	
...3	C488	2401-002144	C-AL;47uF,20%,16V,GP,TP,5x11,5	
...3	C489	2401-001840	C-AL;100uF,20%,16V,GP,TP,6.3x11,5	
...3	C490	2201-000119	C-CERAMIC,DISC;100nF,+80-20%,50V,Y5V,TP,	
...3	C492	2401-002144	C-AL;47uF,20%,16V,GP,TP,5x11,5	
...3	C493	2201-000119	C-CERAMIC,DISC;100nF,+80-20%,50V,Y5V,TP,	
...3	C494	2201-000471	C-CERAMIC,DISC;0.33nF,10%,50V,Y5P,TP,4x3	
...3	C495	2301-000192	C-FILM,PEF;1nF,5%,50V,TP,5.3x10mm,5mm	
...3	C496	2401-000832	C-AL;220uF,20%,25V,GP,TP,8x11.5,5	
...3	D342	0401-000005	DIODE-SWITCHING;1N4148,100V,200MA,DO-35,	
...3	D343	0401-000005	DIODE-SWITCHING;1N4148,100V,200MA,DO-35,	
...3	D344	0401-000005	DIODE-SWITCHING;1N4148,100V,200MA,DO-35,	
...3	D345	0403-001325	DIODE-ZENER;MTZJ15C,14.35-15.09V,500mW,D	
...3	D352	0401-000005	DIODE-SWITCHING;1N4148,100V,200MA,DO-35,	
...3	D353	0401-000005	DIODE-SWITCHING;1N4148,100V,200MA,DO-35,	
...3	D355	0402-000546	DIODE-RECTIFIER;TVR10G,400V,1.0A,DO-41,T	
...3	D363	0401-000005	DIODE-SWITCHING;1N4148,100V,200MA,DO-35,	
...3	D364	0401-000005	DIODE-SWITCHING;1N4148,100V,200MA,DO-35,	
...3	D371	0401-000005	DIODE-SWITCHING;1N4148,100V,200MA,DO-35,	
...3	D372	0401-000005	DIODE-SWITCHING;1N4148,100V,200MA,DO-35,	
...3	D373	0402-000243	DIODE-RECTIFIER;RC2-V1,2000V,0.2A,DO-201	
...3	D384	0402-000132	DIODE-RECTIFIER;1N4004,400V,1A,DO-41,TP	
...3	D385	0401-000005	DIODE-SWITCHING;1N4148,100V,200MA,DO-35,	
...3	D386	0403-001316	DIODE-ZENER;MTZJ3.0A,2.85-3.07V,500mW,DO	
...3	D395	0403-001319	DIODE-ZENER;MTZJ4.7C,4.68-4.93V,500mW,DO	
...3	D442	0401-000005	DIODE-SWITCHING;1N4148,100V,200MA,DO-35,	
...3	D443	0401-000005	DIODE-SWITCHING;1N4148,100V,200MA,DO-35,	
...3	D451	0402-000534	DIODE-RECTIFIER;RG10V,400V,1.2A,DO-201,T	
...3	D456	0401-000005	DIODE-SWITCHING;1N4148,100V,200MA,DO-35,	
...3	D457	0403-000714	DIODE-ZENER;MTZJ3.3B,3.3V,3.32-3.53V,500	
...3	D474	0403-000734	DIODE-ZENER;TZP15B,15V,14.7-16.5V,1W,DO-	
...3	D475	0401-000005	DIODE-SWITCHING;1N4148,100V,200MA,DO-35,	
...3	D476	0401-000005	DIODE-SWITCHING;1N4148,100V,200MA,DO-35,	
...3	D477	0401-000005	DIODE-SWITCHING;1N4148,100V,200MA,DO-35,	
...3	D478	0401-000005	DIODE-SWITCHING;1N4148,100V,200MA,DO-35,	
...3	D479	0401-000005	DIODE-SWITCHING;1N4148,100V,200MA,DO-35,	
...3	D480	0402-000132	DIODE-RECTIFIER;1N4004,400V,1A,DO-41,TP	
...3	D483	0403-000720	DIODE-ZENER;MTZJ9.1B,9.1V,8.57-9.01V,500	
...3	D484	0402-000132	DIODE-RECTIFIER;1N4004,400V,1A,DO-41,TP	
...3	D491	0401-000005	DIODE-SWITCHING;1N4148,100V,200MA,DO-35,	
...3	D492	0403-000716	DIODE-ZENER;MTZJ4.7B,4.7V,4.55-4.8V,500m	
...3	D493	0403-001325	DIODE-ZENER;MTZJ15C,14.35-15.09V,500mW,D	
...3	IC481	1203-001217	IC-POSI.ADJUST REG.;431,TO-92,3P,4.58MIL	
...3	L341	2701-000116	INDUCTOR-AXIAL;10uH,10%,4.2x9.8mm	
...3	Q342	0501-000389	TR-SMALL SIGNAL;KSC815,NPN,400mW,TO-92,T	
...3	Q343	0501-000389	TR-SMALL SIGNAL;KSC815,NPN,400mW,TO-92,T	
...3	Q344	0501-000283	TR-SMALL SIGNAL;KSA539,PNP,400mW,TO-92,T	
...3	Q350	0501-000389	TR-SMALL SIGNAL;KSC815,NPN,400mW,TO-92,T	
...3	Q351	0501-000283	TR-SMALL SIGNAL;KSA539,PNP,400mW,TO-92,T	
...3	Q352	0501-000389	TR-SMALL SIGNAL;KSC815,NPN,400mW,TO-92,T	
...3	Q353	0501-000389	TR-SMALL SIGNAL;KSC815,NPN,400mW,TO-92,T	
...3	Q354	0501-000283	TR-SMALL SIGNAL;KSA539,PNP,400mW,TO-92,T	
...3	Q355	0501-000366	TR-SMALL SIGNAL;KSC2330-Y,NPN,1W,TO-92L,	
...3	Q381	0501-000389	TR-SMALL SIGNAL;KSC815,NPN,400mW,TO-92,T	
...3	Q382	0501-000389	TR-SMALL SIGNAL;KSC815,NPN,400mW,TO-92,T	
...3	Q401	0501-000389	TR-SMALL SIGNAL;KSC815,NPN,400mW,TO-92,T	
...3	Q402	0501-000389	TR-SMALL SIGNAL;KSC815,NPN,400mW,TO-92,T	
...3	Q421	0501-000389	TR-SMALL SIGNAL;KSC815,NPN,400mW,TO-92,T	
...3	Q451	0501-000389	TR-SMALL SIGNAL;KSC815,NPN,400mW,TO-92,T	
...3	Q452	0501-000389	TR-SMALL SIGNAL;KSC815,NPN,400mW,TO-92,T	
...3	Q453	0501-000389	TR-SMALL SIGNAL;KSC815,NPN,400mW,TO-92,T	

Level	Loc. No.	Code No.	Description ; Specification	Remark
...3	Q454	0501-000283	TR-SMALL SIGNAL;KSA539,PNP,400mW,TO-92,T	
...3	Q461	0501-000389	TR-SMALL SIGNAL;KSC815,NPN,400mW,TO-92,T	
...3	Q471	0501-000389	TR-SMALL SIGNAL;KSC815,NPN,400mW,TO-92,T	
...3	Q473	0501-000389	TR-SMALL SIGNAL;KSC815,NPN,400mW,TO-92,T	
...3	Q481	0501-000389	TR-SMALL SIGNAL;KSC815,NPN,400mW,TO-92,T	
...3	Q482	0501-000283	TR-SMALL SIGNAL;KSA539,PNP,400mW,TO-92,T	
...3	Q483	0501-000283	TR-SMALL SIGNAL;KSA539,PNP,400mW,TO-92,T	
...3	Q491	0501-000389	TR-SMALL SIGNAL;KSC815,NPN,400mW,TO-92,T	
...3	R339	2001-000613	R-CARBON;3.9KOHM,5%,1/8W,AA,TP,1.8X3.2M	
...3	R340	2001-000241	R-CARBON;1.5KOHM,5%,1/8W,AA,TP,1.8X3.2M	
...3	R341	2001-000429	R-CARBON;1KOHM,5%,1/8W,AA,TP,1.8X3.2MM	
...3	R342	2001-000273	R-CARBON;100KOHM,5%,1/8W,AA,TP,1.8X3.2M	
...3	R343	2001-000812	R-CARBON;5.6KOHM,5%,1/8W,AA,TP,1.8X3.2M	
...3	R344	2001-000890	R-CARBON;6.8KOHM,5%,1/8W,AA,TP,1.8X3.2M	
...3	R345	2001-001088	R-CARBON(S);1KOHM,5%,1/2W,AA,TP,2.4X6.4M	
...3	R345A	2001-000429	R-CARBON;1KOHM,5%,1/8W,AA,TP,1.8X3.2MM	
...3	R346	2001-000290	R-CARBON;10KOHM,5%,1/8W,AA,TP,1.8X3.2MM	
...3	R347	2001-001088	R-CARBON(S);1KOHM,5%,1/2W,AA,TP,2.4X6.4M	
...3	R348	2001-000591	R-CARBON;3.3KOHM,5%,1/8W,AA,TP,1.8X3.2M	
...3	R349	2001-000252	R-CARBON;1.6KOHM,5%,1/8W,AA,TP,1.8X3.2M	
...3	R351	2001-001178	R-CARBON(S);680OHM,5%,1/2W,AA,TP,2.4X6.4	
...3	R352	2001-000003	R-CARBON;330ohm,5%,1/8W,AA,TP,1.8x3.2mm	
...3	R353	2001-000890	R-CARBON;6.8KOHM,5%,1/8W,AA,TP,1.8X3.2M	
...3	R354	2001-000890	R-CARBON;6.8KOHM,5%,1/8W,AA,TP,1.8X3.2M	
...3	R355	2001-000006	R-CARBON;2.4KOHM,5%,1/8W,AA,TP,1.8X3.2M	
...3	R357	2001-000613	R-CARBON;3.9KOHM,5%,1/8W,AA,TP,1.8X3.2M	
...3	R358	2001-000008	R-CARBON;15KOHM,5%,1/8W,AA,TP,1.8X3.2MM	
...3	R359	2001-000766	R-CARBON;43KOHM,5%,1/8W,AA,TP,1.8X3.2MM	
...3	R360	2001-000857	R-CARBON;560OHM,5%,1/8W,AA,TP,1.8X3.2MM	
...3	R361	2001-001191	R-CARBON(S);820KOHM,5%,1/2W,AA,TP,2.4X6.	
...3	R362	2001-000660	R-CARBON;33KOHM,5%,1/8W,AA,TP,1.8X3.2MM	
...3	R363	2001-000723	R-CARBON;4.3KOHM,5%,1/8W,AA,TP,1.8X3.2M	
...3	R364	2001-000938	R-CARBON;68OHM,5%,1/8W,AA,TP,1.8X3.2MM	
...3	R365	2001-001120	R-CARBON(S);3.3OHM,5%,1/2W,AA,TP,2.4X6.4	
...3	R366	2001-000109	R-CARBON(S);470OHM,5%,1/2W,AA,TP,2.4X6.4	
...3	R367	2001-001065	R-CARBON(S);110KOHM,5%,1/2W,AA,TP,2.4X6.	
...3	R368	2001-001065	R-CARBON(S);110KOHM,5%,1/2W,AA,TP,2.4X6.	
...3	R369	2001-001065	R-CARBON(S);110KOHM,5%,1/2W,AA,TP,2.4X6.	
...3	R369A	2001-001065	R-CARBON(S);110KOHM,5%,1/2W,AA,TP,2.4X6.	
...3	R370	2001-001065	R-CARBON(S);110KOHM,5%,1/2W,AA,TP,2.4X6.	
...3	R371	2001-001065	R-CARBON(S);110KOHM,5%,1/2W,AA,TP,2.4X6.	
...3	R372	2001-001110	R-CARBON(S);240KOHM,5%,1/2W,AA,TP,2.4X6.	
...3	R373	2001-001110	R-CARBON(S);240KOHM,5%,1/2W,AA,TP,2.4X6.	
...3	R374	2001-001110	R-CARBON(S);240KOHM,5%,1/2W,AA,TP,2.4X6.	
...3	R375	2001-001113	R-CARBON(S);270KOHM,5%,1/2W,AA,TP,2.4X6.	
...3	R376	2001-000613	R-CARBON;3.9KOHM,5%,1/8W,AA,TP,1.8X3.2M	
...3	R377	2004-001892	R-METAL(S);162Kohm,1%,1/2W,AA,TP,2.5x6.5	
...3	R378	2004-001892	R-METAL(S);162Kohm,1%,1/2W,AA,TP,2.5x6.5	
...3	R379	2004-001892	R-METAL(S);162Kohm,1%,1/2W,AA,TP,2.5x6.5	
...3	R380	2004-001892	R-METAL(S);162Kohm,1%,1/2W,AA,TP,2.5x6.5	
...3	R381	2001-001088	R-CARBON(S);1KOHM,5%,1/2W,AA,TP,2.4X6.4M	
...3	R384	2001-001150	R-CARBON(S);470KOHM,5%,1/2W,AA,TP,2.4X6.	
...3	R385	2001-000577	R-CARBON;2KOHM,5%,1/8W,AA,TP,1.8X3.2MM	
...3	R386	2001-000786	R-CARBON;47KOHM,5%,1/8W,AA,TP,1.8X3.2MM	
...3	R387	2001-000009	R-CARBON;20KOHM,5%,1/8W,AA,TP,1.8X3.2MM	
...3	R388	2001-000522	R-CARBON;22KOHM,5%,1/8W,AA,TP,1.8X3.2MM	
...3	R389	2001-000577	R-CARBON;2KOHM,5%,1/8W,AA,TP,1.8X3.2MM	
...3	R395	2001-000734	R-CARBON;4.7KOHM,5%,1/8W,AA,TP,1.8X3.2M	
...3	R397	2001-000429	R-CARBON;1KOHM,5%,1/8W,AA,TP,1.8X3.2MM	
...3	R411	2001-000734	R-CARBON;4.7KOHM,5%,1/8W,AA,TP,1.8X3.2M	
...3	R412	2001-001088	R-CARBON(S);1KOHM,5%,1/2W,AA,TP,2.4X6.4M	
...3	R413	2001-000515	R-CARBON;220OHM,5%,1/8W,AA,TP,1.8X3.2MM	
...3	R414	2001-000290	R-CARBON;10KOHM,5%,1/8W,AA,TP,1.8X3.2MM	
...3	R415	2001-000734	R-CARBON;4.7KOHM,5%,1/8W,AA,TP,1.8X3.2M	
...3	R416	2001-000006	R-CARBON;2.4KOHM,5%,1/8W,AA,TP,1.8X3.2M	
...3	R420	2001-000281	R-CARBON;100OHM,5%,1/8W,AA,TP,1.8X3.2MM	
...3	R421	2003-002159	R-METAL OXIDE;150OHM,5%,1W,AG,TP,4.3X12M	
...3	R422	2001-000028	R-CARBON(S);100OHM,5%,1/2W,AA,TP,2.4X6.4	
...3	R423	2001-000613	R-CARBON;3.9KOHM,5%,1/8W,AA,TP,1.8X3.2M	
...3	R437	2008-001087	R-FUSIBLE(S);1.8ohm,5%,2W,AG,TP,3.9x12mm	
...3	R438	2001-000085	R-CARBON(S);100KOHM,5%,1/2W,AA,TP,2.4X6.	
...3	R439	2001-000085	R-CARBON(S);100KOHM,5%,1/2W,AA,TP,2.4X6.	
...3	R442	2008-000254	R-FUSIBLE(S);0.68ohm,5%,2W,AF,TP,3.9x10m	
...3	R442A	2008-000254	R-FUSIBLE(S);0.68ohm,5%,2W,AF,TP,3.9x10m	
...3	R443	2003-002156	R-METAL OXIDE;560OHM,5%,2W,AG,TP,6X16MM	
...3	R443A	2003-002156	R-METAL OXIDE;560OHM,5%,2W,AG,TP,6X16MM	

Level	Loc. No.	Code No.	Description ; Specification	Remark
...3	R445	2001-000258	R-CARBON;1.8KOHM,5%,1/8W,AA,TP,1.8X3.2M	
...3	R446	2001-000522	R-CARBON;22KOHM,5%,1/8W,AA,TP,1.8X3.2MM	
...3	R447	2001-000812	R-CARBON;5.6KOHM,5%,1/8W,AA,TP,1.8X3.2M	
...3	R448	2001-000411	R-CARBON;18KOHM,5%,1/8W,AA,TP,1.8X3.2MM	
...3	R449	2001-000660	R-CARBON;33KOHM,5%,1/8W,AA,TP,1.8X3.2MM	
...3	R450	2001-000290	R-CARBON;10KOHM,5%,1/8W,AA,TP,1.8X3.2MM	
...3	R451	2001-000812	R-CARBON;5.6KOHM,5%,1/8W,AA,TP,1.8X3.2M	
...3	R452	2001-000241	R-CARBON;1.5KOHM,5%,1/8W,AA,TP,1.8X3.2M	
...3	R454	2001-000761	R-CARBON;430OHM,5%,1/8W,AA,TP,1.8X3.2MM	
...3	R455	2001-000761	R-CARBON;430OHM,5%,1/8W,AA,TP,1.8X3.2MM	
...3	R456	2001-000761	R-CARBON;430OHM,5%,1/8W,AA,TP,1.8X3.2MM	
...3	R458	2001-000577	R-CARBON;2KOHM,5%,1/8W,AA,TP,1.8X3.2MM	
...3	R459	2001-001192	R-CARBON(S);820OHM,5%,1/2W,AA,TP,2.4X6.4	
...3	R460	2003-002044	R-METAL OXIDE(S);100ohm,5%,1W,AF,TP,2.5x	
...3	R461	2001-000613	R-CARBON;3.9KOHM,5%,1/8W,AA,TP,1.8X3.2M	
...3	R464	2001-000734	R-CARBON;4.7KOHM,5%,1/8W,AA,TP,1.8X3.2M	
...3	R471	2001-001146	R-CARBON(S);4.7OHM,5%,1/2W,AA,TP,2.4X6.4	
...3	R472	2001-000800	R-CARBON;5.1KOHM,5%,1/8W,AA,TP,1.8X3.2M	
...3	R473	2001-000800	R-CARBON;5.1KOHM,5%,1/8W,AA,TP,1.8X3.2M	
...3	R474	2001-000009	R-CARBON;20KOHM,5%,1/8W,AA,TP,1.8X3.2MM	
...3	R474A	2001-000508	R-CARBON;220KOHM,5%,1/8W,AA,TP,1.8X3.2M	
...3	R475	2004-001023	R-METAL;5.6Kohm,1%,1/8W,AA,TP,1.8x3.2m	
...3	R475B	2001-000734	R-CARBON;4.7KOHM,5%,1/8W,AA,TP,1.8X3.2M	
...3	R477	2001-000429	R-CARBON;1KOHM,5%,1/8W,AA,TP,1.8X3.2MM	
...3	R479	2001-000005	R-CARBON;390ohm,5%,1/8W,AA,TP,1.8x3.2mm	
...3	R480	2001-000449	R-CARBON;2.2KOHM,5%,1/8W,AA,TP,1.8X3.2M	
...3	R481	2001-000290	R-CARBON;10KOHM,5%,1/8W,AA,TP,1.8X3.2MM	
...3	R482	2001-001031	R-CARBON;91KOHM,5%,1/8W,AA,TP,1.8X3.2MM	
...3	R483	2001-000429	R-CARBON;1KOHM,5%,1/8W,AA,TP,1.8X3.2MM	
...3	R484	2001-000429	R-CARBON;1KOHM,5%,1/8W,AA,TP,1.8X3.2MM	
...3	R487	2001-000924	R-CARBON;680OHM,5%,1/8W,AA,TP,1.8X3.2MM	
...3	R489	2001-000522	R-CARBON;22KOHM,5%,1/8W,AA,TP,1.8X3.2MM	
...3	R490	2001-000723	R-CARBON;4.3KOHM,5%,1/8W,AA,TP,1.8X3.2M	
...3	R491	2001-001178	R-CARBON(S);680OHM,5%,1/2W,AA,TP,2.4X6.4	
...3	R492	2001-000591	R-CARBON;3.3KOHM,5%,1/8W,AA,TP,1.8X3.2M	
...3	R493	2001-000429	R-CARBON;1KOHM,5%,1/8W,AA,TP,1.8X3.2MM	
...3	R494	2001-000066	R-CARBON(S);10KOHM,5%,1/2W,AA,TP,2.4X6.4	
...3	R495	2001-000037	R-CARBON(S);330OHM,5%,1/2W,AA,TP,2.4X6.4	
...3	R496	2001-000347	R-CARBON;13KOHM,5%,1/8W,AA,TP,1.8X3.2MM	
...3	R497	2001-000003	R-CARBON;330ohm,5%,1/8W,AA,TP,1.8x3.2mm	
...3	R498	2001-001070	R-CARBON(S);120OHM,5%,1/2W,AA,TP,2.4X6.4	
..2		2001-000262	R-CARBON;1.8MOHM,5%,1/8W,AA,TP,1.8X3.2M	
..2		0202-000187	SOLDER-WIRE FLUX;-,RS60S,D1.2,63Sn/37Pb	S.N.A
..2		AA65-30105C	CLAMP-WIRE;ALL MODEL,NYLON 66,V2,NTR,5MM	S.N.A

ASSY-PCB,CONV AMP

1	*	AA95-00055L	ASSY-PCB,CONV AMP;-,SP53J5HF,J51A,-,-,-	
..2	C491	2306-000322	C-FILM,MPPF;12nF,5%,1.6KV,TP,29x20.5x13,	
..2	CN203	AA39-00115A	LEAD CONNECTOR-ASSY;,-,-,10P,-,-,-,YBNH2	
..2	CN401	AA39-00128A	LEAD CONNECTOR-ASSY;,-,-,8P,-,-,-,YBNH25	
..2	CN402	AA39-00116A	LEAD CONNECTOR-ASSY;,-,-,12P,-,-,-,YBNH2	
..2	CN802	AA39-00128A	LEAD CONNECTOR-ASSY;,-,-,8P,-,-,-,YBNH25	
⚠ ..2	ICZ101	AA96-50152C	ASSY-H/S;-,TR,AA62-30012A,KA7806A,30MM	
...3		1203-000284	IC-POSI.FIXED REG.;7806,TO-220,3P,-,PLAS	
...3		6003-000333	SCREW-TAPTITE;RH,+,2S,M3,L10,ZPC(YEL),SW	S.N.A
...3		AA62-30012A	HEAT SINK-ES;-,A6063 EXTR,-,-,T0220,-,-,	S.N.A
⚠ ..2	ICZ102	1203-000121	IC-NEGA.FIXED REG.;7906,TO-220,3P,-,PLAS	
⚠ ..2	ICZ103	AA96-00034A	ASSY-H/S;-,CONVERGENCE,AA62-30173D,STK3	
...3		0205-000129	GREASE-SILICON;SC102,JAPAN	S.N.A
...3		1201-001225	IC-VIDEO AMP;392,SIP,22P,-,THREE,-,PLAST	
...3		6003-001021	SCREW-TAPTITE;RH,+,B,M3,L15,ZPC(YEL),SWR	S.N.A
...3		AA62-30173D	HEAT SINK-ES;-,-,T1.0,WHITE,SCREW-HOLE(2	S.N.A
⚠ ..2	ICZ104	AA96-00034A	ASSY-H/S;-,CONVERGENCE,AA62-30173D,STK3	
..2	PCB	AA41-00135D	PCB-CONVERGENCE AMP;P51A,1L,CEM-1,330x24	S.N.A
..2	SG303	4715-001050	SURGE ABSORBER;2.4kV,20%,1500A,-,DISC-RA	
..2	VR472	2103-001086	VR-SEMI;100KOHM,25%,0.3W,TOP	
..2		0202-000187	SOLDER-WIRE FLUX;-,RS60S,D1.2,63Sn/37Pb	S.N.A
..2		AA99-20071E	ASSY-PCB SUB,AUTO; AA95-00055L ,V	S.N.A
...3	CN403	3711-002643	CONNECTOR-HEADER;BOX,4P,1R,2.5MM,STRAIGH	
...3	CZ101	2401-001429	C-AL;470uF,20%,50V,GP,TP,13x20,5	
...3	CZ102	2401-001429	C-AL;470uF,20%,50V,GP,TP,13x20,5	
...3	CZ103	2401-000689	C-AL;2200uF,20%,16V,GP,TP,13x25,5	
...3	CZ105	2401-000689	C-AL;2200uF,20%,16V,GP,TP,13x25,5	
...3	CZ106	2201-000180	C-CERAMIC,DISC;10nF,10%,50V,Y5V,TP,7x3,5	
...3	CZ107	2201-000180	C-CERAMIC,DISC;10nF,10%,50V,Y5V,TP,7x3,5	
...3	CZ108	2201-000499	C-CERAMIC,DISC;0.39nF,5%,50V,SL,TP,8.5x3	
...3	CZ109	2201-000499	C-CERAMIC,DISC;0.39nF,5%,50V,SL,TP,8.5x3	
...3	CZ110	2201-000499	C-CERAMIC,DISC;0.39nF,5%,50V,SL,TP,8.5x3	
...3	CZ111	2201-000976	C-CERAMIC,DISC;0.022nF,5%,50V,NP0,TP,5x3	
...3	CZ112	2201-000863	C-CERAMIC,DISC;0.68nF,10%,50V,Y5P,TP,5x3	
...3	CZ113	2201-000976	C-CERAMIC,DISC;0.022nF,5%,50V,NP0,TP,5x3	
...3	CZ114	2201-000863	C-CERAMIC,DISC;0.68nF,10%,50V,Y5P,TP,5x3	
...3	CZ115	2201-000976	C-CERAMIC,DISC;0.022nF,5%,50V,NP0,TP,5x3	
...3	CZ116	2201-000863	C-CERAMIC,DISC;0.68nF,10%,50V,Y5P,TP,5x3	
...3	CZ117	2201-000327	C-CERAMIC,DISC;2.2nF,10%,50V,Y5V,TP,6.5x	
...3	CZ118	2201-000327	C-CERAMIC,DISC;2.2nF,10%,50V,Y5V,TP,6.5x	
...3	CZ119	2201-000119	C-CERAMIC,DISC;100nF,+80-20%,50V,Y5V,TP,	
...3	CZ120	2201-000119	C-CERAMIC,DISC;100nF,+80-20%,50V,Y5V,TP,	
...3	CZ121	2201-000764	C-CERAMIC,DISC;0.082nF,5%,50V,NP0,TP,8x3	
...3	CZ126	2201-000499	C-CERAMIC,DISC;0.39nF,5%,50V,SL,TP,8.5x3	
...3	CZ127	2201-000499	C-CERAMIC,DISC;0.39nF,5%,50V,SL,TP,8.5x3	
...3	CZ128	2201-000499	C-CERAMIC,DISC;0.39nF,5%,50V,SL,TP,8.5x3	
...3	CZ132	2201-000976	C-CERAMIC,DISC;0.022nF,5%,50V,NP0,TP,5x3	
...3	CZ133	2201-000863	C-CERAMIC,DISC;0.68nF,10%,50V,Y5P,TP,5x3	
...3	CZ134	2201-000976	C-CERAMIC,DISC;0.022nF,5%,50V,NP0,TP,5x3	
...3	CZ135	2201-000863	C-CERAMIC,DISC;0.68nF,10%,50V,Y5P,TP,5x3	
...3	CZ136	2201-000976	C-CERAMIC,DISC;0.022nF,5%,50V,NP0,TP,5x3	
...3	CZ137	2201-000863	C-CERAMIC,DISC;0.68nF,10%,50V,Y5P,TP,5x3	
...3	CZ138	2201-000327	C-CERAMIC,DISC;2.2nF,10%,50V,Y5V,TP,6.5x	
...3	CZ139	2201-000327	C-CERAMIC,DISC;2.2nF,10%,50V,Y5V,TP,6.5x	
...3	CZ144	2401-001840	C-AL;100uF,20%,16V,GP,TP,6.3x11,5	
...3	CZ145	2201-000119	C-CERAMIC,DISC;100nF,+80-20%,50V,Y5V,TP,	
...3	CZ146	2401-001840	C-AL;100uF,20%,16V,GP,TP,6.3x11,5	
...3	CZ147	2201-000119	C-CERAMIC,DISC;100nF,+80-20%,50V,Y5V,TP,	
...3	CZ151	2202-000796	C-CERAMIC,MLC-AXIAL;1NF,10%,50V,Y5P,TP,3	
...3	CZ152	2202-000796	C-CERAMIC,MLC-AXIAL;1NF,10%,50V,Y5P,TP,3	
...3	CZ153	2202-000796	C-CERAMIC,MLC-AXIAL;1NF,10%,50V,Y5P,TP,3	
...3	CZ154	2202-000796	C-CERAMIC,MLC-AXIAL;1NF,10%,50V,Y5P,TP,3	
...3	CZ155	2202-000796	C-CERAMIC,MLC-AXIAL;1NF,10%,50V,Y5P,TP,3	
...3	CZ156	2202-000796	C-CERAMIC,MLC-AXIAL;1NF,10%,50V,Y5P,TP,3	
...3	D453	0402-001286	DIODE-RECTIFIER;RP1H,2000V,.1A,-,TP	
...3	D501	0401-000005	DIODE-SWITCHING;1N4148,100V,200MA,DO-35,	
...3	DZ120	0403-000510	DIODE-ZENER;MTZJ6.2B,6.2V,5.96-6.27V,500	
...3	DZ121	0403-000510	DIODE-ZENER;MTZJ6.2B,6.2V,5.96-6.27V,500	
...3	DZ122	0403-000510	DIODE-ZENER;MTZJ6.2B,6.2V,5.96-6.27V,500	
...3	DZ126	0402-000546	DIODE-RECTIFIER;TVR10G,400V,1.0A,DO-41,T	
...3	DZ127	0402-000546	DIODE-RECTIFIER;TVR10G,400V,1.0A,DO-41,T	
...3	DZ128	0403-000510	DIODE-ZENER;MTZJ6.2B,6.2V,5.96-6.27V,500	
...3	DZ129	0403-000510	DIODE-ZENER;MTZJ6.2B,6.2V,5.96-6.27V,500	
...3	DZ130	0403-000510	DIODE-ZENER;MTZJ6.2B,6.2V,5.96-6.27V,500	
...3	DZ131	0403-000510	DIODE-ZENER;MTZJ6.2B,6.2V,5.96-6.27V,500	
...3	LZ101	2701-001030	INDUCTOR-AXIAL;43uH,10%,5x14mm	
...3	LZ102	2701-001030	INDUCTOR-AXIAL;43uH,10%,5x14mm	
...3	LZ103	2701-000142	INDUCTOR-AXIAL;1uH,10%,2.5x3.4mm	
...3	LZ104	2701-000142	INDUCTOR-AXIAL;1uH,10%,2.5x3.4mm	
...3	LZ107	2701-000142	INDUCTOR-AXIAL;1uH,10%,2.5x3.4mm	
...3	LZ108	2701-000142	INDUCTOR-AXIAL;1uH,10%,2.5x3.4mm	
...3	LZ109	2701-000142	INDUCTOR-AXIAL;1uH,10%,2.5x3.4mm	
...3	LZ110	2701-000142	INDUCTOR-AXIAL;1uH,10%,2.5x3.4mm	
...3	LZ111	2701-000142	INDUCTOR-AXIAL;1uH,10%,2.5x3.4mm	
...3	LZ112	2701-000142	INDUCTOR-AXIAL;1uH,10%,2.5x3.4mm	
...3	R382	2002-001006	R-COMPOSITION;4.7Kohm,5%,1/2W,AA,TP,3.7x	
...3	R476	2004-004046	R-METAL(S);430Kohm,1%,1/2W,AA,TP,2.5x6.5	
...3	R476A	2004-004001	R-METAL(S);180Kohm,1%,1/2W,AA,TP,2.5x6.5	
...3	R476B	2004-001892	R-METAL(S);162Kohm,1%,1/2W,AA,TP,2.5x6.5	
...3	R476C	2004-004046	R-METAL(S);430Kohm,1%,1/2W,AA,TP,2.5x6.5	
...3	R478	2004-001892	R-METAL(S);162Kohm,1%,1/2W,AA,TP,2.5x6.5	
...3	R501	2004-001376	R-METAL(S);11Kohm,1%,1/2W,AA,TP,2.4x6.4m	
...3	R502	2004-004366	R-METAL(S);1.3Kohm,1%,1/2W,AA,TP,2.5x6.5	
...3	RFZ19	2008-000261	R-FUSIBLE(S);150ohm,5%,1W,AF,TP,3.9x10mm	
...3	RFZ20	2008-000261	R-FUSIBLE(S);150ohm,5%,1W,AF,TP,3.9x10mm	
...3	RFZ21	2008-000261	R-FUSIBLE(S);150ohm,5%,1W,AF,TP,3.9x10mm	
...3	RFZ22	2008-000261	R-FUSIBLE(S);150ohm,5%,1W,AF,TP,3.9x10mm	
...3	RFZ50	2008-000261	R-FUSIBLE(S);150ohm,5%,1W,AF,TP,3.9x10mm	
...3	RFZ51	2008-000261	R-FUSIBLE(S);150ohm,5%,1W,AF,TP,3.9x10mm	
...3	RFZ52	2008-000261	R-FUSIBLE(S);150ohm,5%,1W,AF,TP,3.9x10mm	
...3	RFZ53	2008-000261	R-FUSIBLE(S);150ohm,5%,1W,AF,TP,3.9x10mm	
...3	RZ101	2001-000429	R-CARBON;1KOHM,5%,1/8W,AA,TP,1.8X3.2MM	
...3	RZ102	2001-000429	R-CARBON;1KOHM,5%,1/8W,AA,TP,1.8X3.2MM	
...3	RZ103	2001-000429	R-CARBON;1KOHM,5%,1/8W,AA,TP,1.8X3.2MM	

Level	Loc. No.	Code No.	Description ; Specification	Remark
...3	RZ104	2001-001114	R-CARBON(S);270OHM,5%,1/2W,AA,TP,2.4X6.4	
...3	RZ105	2001-001114	R-CARBON(S);270OHM,5%,1/2W,AA,TP,2.4X6.4	
...3	RZ106	2001-001114	R-CARBON(S);270OHM,5%,1/2W,AA,TP,2.4X6.4	
...3	RZ107	2001-001114	R-CARBON(S);270OHM,5%,1/2W,AA,TP,2.4X6.4	
...3	RZ108	2001-001114	R-CARBON(S);270OHM,5%,1/2W,AA,TP,2.4X6.4	
...3	RZ109	2001-001114	R-CARBON(S);270OHM,5%,1/2W,AA,TP,2.4X6.4	
...3	RZ110	2001-000563	R-CARBON;27KOHM,5%,1/8W,AA,TP,1.8X3.2MM	
...3	RZ111	2001-000563	R-CARBON;27KOHM,5%,1/8W,AA,TP,1.8X3.2MM	
...3	RZ112	2001-000563	R-CARBON;27KOHM,5%,1/8W,AA,TP,1.8X3.2MM	
...3	RZ113	2001-000591	R-CARBON;3.3KOHM,5%,1/8W,AA,TP,1.8X3.2M	
...3	RZ114	2001-000857	R-CARBON;560OHM,5%,1/8W,AA,TP,1.8X3.2MM	
...3	RZ115	2001-000591	R-CARBON;3.3KOHM,5%,1/8W,AA,TP,1.8X3.2M	
...3	RZ116	2001-000857	R-CARBON;560OHM,5%,1/8W,AA,TP,1.8X3.2MM	
...3	RZ117	2001-000591	R-CARBON;3.3KOHM,5%,1/8W,AA,TP,1.8X3.2M	
...3	RZ118	2001-000857	R-CARBON;560OHM,5%,1/8W,AA,TP,1.8X3.2MM	
...3	RZ120	2001-000281	R-CARBON;100OHM,5%,1/8W,AA,TP,1.8X3.2MM	
...3	RZ121	2001-000281	R-CARBON;100OHM,5%,1/8W,AA,TP,1.8X3.2MM	
...3	RZ122	2001-000003	R-CARBON;330ohm,5%,1/8W,AA,TP,1.8x3.2mm	
...3	RZ123	2003-002148	R-METAL OXIDE;3.9OHM,2%,2W,AF,TP,3.9X10M	
...3	RZ124	2003-002148	R-METAL OXIDE;3.9OHM,2%,2W,AF,TP,3.9X10M	
...3	RZ125	2003-002148	R-METAL OXIDE;3.9OHM,2%,2W,AF,TP,3.9X10M	
...3	RZ126	2003-002148	R-METAL OXIDE;3.9OHM,2%,2W,AF,TP,3.9X10M	
...3	RZ127	2003-002148	R-METAL OXIDE;3.9OHM,2%,2W,AF,TP,3.9X10M	
...3	RZ128	2003-002148	R-METAL OXIDE;3.9OHM,2%,2W,AF,TP,3.9X10M	
...3	RZ129	2003-001024	R-METAL OXIDE(S);150ohm,5%,2W,AF,TP,3.9x	
...3	RZ129A	2003-001024	R-METAL OXIDE(S);150ohm,5%,2W,AF,TP,3.9x	
...3	RZ130	2003-001024	R-METAL OXIDE(S);150ohm,5%,2W,AF,TP,3.9x	
...3	RZ130A	2003-001024	R-METAL OXIDE(S);150ohm,5%,2W,AF,TP,3.9x	
...3	RZ131	2003-002157	R-METAL OXIDE;220OHM,5%,2W,AG,TP,6X16MM	
...3	RZ131A	2003-002157	R-METAL OXIDE;220OHM,5%,2W,AG,TP,6X16MM	
...3	RZ132	2003-002157	R-METAL OXIDE;220OHM,5%,2W,AG,TP,6X16MM	
...3	RZ132A	2003-002157	R-METAL OXIDE;220OHM,5%,2W,AG,TP,6X16MM	
...3	RZ133	2001-000563	R-CARBON;27KOHM,5%,1/8W,AA,TP,1.8X3.2MM	
...3	RZ134	2001-000563	R-CARBON;27KOHM,5%,1/8W,AA,TP,1.8X3.2MM	
...3	RZ135	2001-000563	R-CARBON;27KOHM,5%,1/8W,AA,TP,1.8X3.2MM	
...3	RZ136	2001-000591	R-CARBON;3.3KOHM,5%,1/8W,AA,TP,1.8X3.2M	
...3	RZ137	2001-000857	R-CARBON;560OHM,5%,1/8W,AA,TP,1.8X3.2MM	
...3	RZ138	2001-000591	R-CARBON;3.3KOHM,5%,1/8W,AA,TP,1.8X3.2M	
...3	RZ139	2001-000857	R-CARBON;560OHM,5%,1/8W,AA,TP,1.8X3.2MM	
...3	RZ140	2001-000591	R-CARBON;3.3KOHM,5%,1/8W,AA,TP,1.8X3.2M	
...3	RZ141	2001-000857	R-CARBON;560OHM,5%,1/8W,AA,TP,1.8X3.2MM	
...3	RZ142	2003-002148	R-METAL OXIDE;3.9OHM,2%,2W,AF,TP,3.9X10M	
...3	RZ143	2003-002148	R-METAL OXIDE;3.9OHM,2%,2W,AF,TP,3.9X10M	
...3	RZ144	2003-002148	R-METAL OXIDE;3.9OHM,2%,2W,AF,TP,3.9X10M	
...3	RZ145	2003-002148	R-METAL OXIDE;3.9OHM,2%,2W,AF,TP,3.9X10M	
...3	RZ146	2003-002148	R-METAL OXIDE;3.9OHM,2%,2W,AF,TP,3.9X10M	
...3	RZ147	2003-002148	R-METAL OXIDE;3.9OHM,2%,2W,AF,TP,3.9X10M	
...3	RZ148	2003-002157	R-METAL OXIDE;220OHM,5%,2W,AG,TP,6X16MM	
...3	RZ148A	2003-002157	R-METAL OXIDE;220OHM,5%,2W,AG,TP,6X16MM	
...3	RZ149	2003-001024	R-METAL OXIDE(S);150ohm,5%,2W,AF,TP,3.9x	
...3	RZ149A	2003-001024	R-METAL OXIDE(S);150ohm,5%,2W,AF,TP,3.9x	

ASSY POWER CORD

1	*	AA96-00305A	ASSY POWER CORD;-,CP2/NO(4.8),H/C 50mm,V	
..2		3811-000401	WIRE-PVC CU;BCWA,300V,ROLL,17/0.16mm,#22	S.N.A
..2		AA61-20284A	HOLDER;-,P-CORD,PP,VO,BLK,KE-002	S.N.A
⚠ ..2		AA39-10007B	POWER-CORD;-,VM-0377,2x42/0.15,2.4MT,3P	

ASSY-DOOR,BODY

1	*	AA95-00575A	ASSY-DOOR,BODY;-,SP53J5HFX/MVT,J51A,-,-,	
..2	AV+DB	6006-001095	SCREW-ASS'Y TAPT;WP,BH,+,M4,L12,ZPC(YEL)	S.N.A
..2	CP+DB	6002-000512	SCREW-TAPPING;RH,+,2,M4,L12,ZPC(BLK),SWR	S.N.A
..2	PC+BM	6003-001023	SCREW-TAPTITE;RWH,+,B,M3,L10,ZPC(YEL),SW	S.N.A
..2		AA91-00157P	ASSY-DOOR,BODY;-,HB,J51A PAL,SP43J5HF	
...3	KC+DB	6002-000512	SCREW-TAPPING;RH,+,2,M4,L12,ZPC(BLK),SWR	S.N.A
...3	KNOPOW	AA61-60005A	SPRING-CS;-,SUS304,0.6,OD10.7,H10,N4,-,-	
...3	WR+DB	6002-000512	SCREW-TAPPING;RH,+,2,M4,L12,ZPC(BLK),SWR	S.N.A
...3		AA64-00290B	WINDOW-REMOCON;-,PCJ533R,SV-704P,PC,-,VI	S.N.A
...3		AA64-00294B	DOOR-CONTROL;-,PCJ533R,GR-806P,ABS,HB,GR	

Level	Loc. No.	Code No.	Description ; Specification	Remark
...3		AA64-00295H	DOOR-BODY;-,53J5HF,GR-806P P51A PAL,HIPS	
...3		AA64-00289B	INDICATOR-LED;-,PCJ533R,-,ACRYL,-,CLR,-	S.N.A
...3		AA64-00288C	KNOB-POWER;-,43J5,GR806P MASTER,ABS,HB,G	S.N.A
...3		AA64-00287B	KNOB-CHA,VOL;-,PCJ533R,S/METALLIC+UV COA	S.N.A
...3		AA64-00286B	KNOB-CONTROL;-,PCJ533R,GR-806P,ABS,HB,GR	S.N.A
...3		AA61-30001A	LATCH-DOOR;-,-,-,KIFUCO LA701,-	S.N.A
..2		AA95-00262B	ASSY-PCB,CONTROL;-,SP43J5HP3S/XTT,CHINA,	
...3	CNW01	AA39-00120C	LEAD CONNECTOR-ASSY;,-,-,11P,-,-,-,35155	
...3	CNY01	3711-003973	CONNECTOR-HEADER;BOX,11P,1R,2.5mm,STRAIG	
...3	LEDY01	0601-001381	LED;ROUND,RED/GRN,5.0MM,650/563NM	
...3	PCB	AA41-00189A	PCB-CONTROL;J51A,1L,FR-1,330x245x1.6T,4A	S.N.A
...3	RMY01	AA59-60002B	MODULE-REMOCON;-,ORC-50HF,38KHZ,940MM,ME	
...3	SWY03	3404-000176	SWITCH-TACT;12V,50mA,120gf,6x6mm,SPST	
...3	SWY04	3404-000176	SWITCH-TACT;12V,50mA,120gf,6x6mm,SPST	
...3	SWY05	3404-000176	SWITCH-TACT;12V,50mA,120gf,6x6mm,SPST	
...3	SWY06	3404-000176	SWITCH-TACT;12V,50mA,120gf,6x6mm,SPST	
...3	SWY07	3404-000176	SWITCH-TACT;12V,50mA,120gf,6x6mm,SPST	
...3	SWY08	3404-000176	SWITCH-TACT;12V,50mA,120gf,6x6mm,SPST	
...3		AA61-20069A	HOLDER-WIRE;-,-,NYLON-66,V0,NTR,PAWH-5NA	S.N.A
...3		0202-000187	SOLDER-WIRE FLUX;-,RS60S,D1.2,63Sn/37Pb	S.N.A
...3		3301-001201	CORE-FERRITE;AE,230.5x10.25x36mm,1500,28	
...3		AA63-10002B	BAND-TIE;-,NYLON66 V2,-,-,L140,NTR,-,-	S.N.A
...3		AA99-20061Y	ASSY-PCB SUB,AUTO; AA95-00262B ,V	S.N.A
....4	CY01	2401-001496	C-AL;47uF,20%,16V,GP,TP,5x7,5	
....4	QY01	0504-000123	TR-DIGITAL;KSR1010,NPN,300mW,10K,TO-92,T	
....4	QY02	0504-000123	TR-DIGITAL;KSR1010,NPN,300mW,10K,TO-92,T	
....4	RY01	2001-000109	R-CARBON(S);470OHM,5%,1/2W,AA,TP,2.4X6.4	
....4	RY02	2001-000924	R-CARBON;680OHM,5%,1/8W,AA,TP,1.8X3.2MM	
....4	RY03	2001-000429	R-CARBON;1KOHM,5%,1/8W,AA,TP,1.8X3.2MM	
....4	RY04	2001-000449	R-CARBON;2.2KOHM,5%,1/8W,AA,TP,1.8X3.2M	
....4	RY05	2001-000924	R-CARBON;680OHM,5%,1/8W,AA,TP,1.8X3.2MM	
....4	RY06	2001-000429	R-CARBON;1KOHM,5%,1/8W,AA,TP,1.8X3.2MM	
....4	RY07	2001-000020	R-CARBON(S);22OHM,5%,1/2W,AA,TP,2.4X6.4M	
....4	RY08	2001-001108	R-CARBON(S);22KOHM,5%,1/2W,AA,TP,2.4X6.4	
....4	RY09	2001-000109	R-CARBON(S);470OHM,5%,1/2W,AA,TP,2.4X6.4	
..2		AA95-00098D	ASSY-PCB,POWER S/W;-,SP43J5HP3S/XTT,J51A	
...3	CNP01	AA39-20176G	LEAD CONNECTOR-ASSY;,-,-,3(2)P,-,-,-,YFH	
...3	CNP02	AA39-20176G	LEAD CONNECTOR-ASSY;,-,-,3(2)P,-,-,-,YFH	
...3	PCB	AA41-00035A	PCB-POWER S/W;J51A,1L,CEM-1,245x245x1.6T	S.N.A
...3	SWP01	3403-000179	SWITCH-PUSH;250V,5A,DPST,-,JPW-2104B	
...3		AA63-10002B	BAND-TIE;-,NYLON66 V2,-,-,L140,NTR,-,-	S.N.A
...3		AA99-20067C	ASSY-PCB SUB,AUTO; AA95-00098D ,V	S.N.A
...3		AA61-00110B	BRACKET-MASTER;-,PCJ533R,SECC-1,T1.0,NTR	S.N.A
...3		0202-000187	SOLDER-WIRE FLUX;-,RS60S,D1.2,63Sn/37Pb	S.N.A
...3		6003-000334	SCREW-TAPTITE;RH,+,2S,M3,L6,ZPC(YEL),SWR	S.N.A
..2		AA95-00046D	ASSY-AV SIDE;-,SP43J5HP3C/XTT,J51A,-,-,-	
...3	CNW02	AA39-20032J	LEAD CONNECTOR-ASSY;-,67096-12,S,12P,130	
...3	CNY02	3711-003641	CONNECTOR-HEADER;BOX,12P,1R,2.5mm,STRAIG	
...3	JK101	3722-001163	JACK-VHS;4P,12mm,AU,BLK,N	
...3	JK102	3722-001031	JACK-RCA;3P,3.6MM,#18,AU	
...3	PCB	AA41-10969B	PCB-A/V SIDE;KPT51A/52A,1L,FR-1,245X245X	S.N.A
...3		AA63-10002A	BAND-TIE;-,NYLON66 V2,-,-,L100,NTR,-,-	S.N.A
...3		AA98-60004J	ASSY-SUB,PART;APT51A,A/V,-,ALL	S.N.A
....4		0202-000187	SOLDER-WIRE FLUX;-,RS60S,D1.2,63Sn/37Pb	S.N.A
...3		AA99-20066X	ASSY-PCB SUB,AUTO; AA95-00046D ,V	S.N.A
....4	CP01	2202-000263	C-CERAMIC,MLC-AXIAL;470pF,10%,50V,Y5P,TP	
....4	CP02	2202-000263	C-CERAMIC,MLC-AXIAL;470pF,10%,50V,Y5P,TP	
....4	CP03	2202-000263	C-CERAMIC,MLC-AXIAL;470pF,10%,50V,Y5P,TP	
....4	CP04	2401-000302	C-AL;100uF,20%,25V,GP,TP,6.3x11,5	
....4	CP05	2401-000302	C-AL;100uF,20%,25V,GP,TP,6.3x11,5	
....4	CP06	2401-000302	C-AL;100uF,20%,25V,GP,TP,6.3x11,5	
....4	CP07	2401-000302	C-AL;100uF,20%,25V,GP,TP,6.3x11,5	
....4	CP08	2401-000302	C-AL;100uF,20%,25V,GP,TP,6.3x11,5	
....4	CP09	2202-000121	C-CERAMIC,MLC-AXIAL;100pF,10%,50V,Y5P,TP	
....4	CP10	2202-000121	C-CERAMIC,MLC-AXIAL;100pF,10%,50V,Y5P,TP	
....4	RP01	2001-000273	R-CARBON;100KOHM,5%,1/8W,AA,TP,1.8X3.2M	
....4	RP02	2001-000969	R-CARBON;75OHM,5%,1/8W,AA,TP,1.8X3.2MM	
....4	RP03	2001-000273	R-CARBON;100KOHM,5%,1/8W,AA,TP,1.8X3.2M	
....4	RP04	2001-000969	R-CARBON;75OHM,5%,1/8W,AA,TP,1.8X3.2MM	
....4	RP05	2001-000969	R-CARBON;75OHM,5%,1/8W,AA,TP,1.8X3.2MM	
...3		3301-001201	CORE-FERRITE;AE,230.5x10.25x36mm,1500,28	

ASSY-PCB,SUB

Level	Loc. No.	Code No.	Description ; Specification	Remark
1	*	AA95-00425B	ASSY-PCB,SUB;-,SP53J5HF,J51A,PAL,-,-	
..2	C430	2301-001219	C-FILM,MPE-PPF;3.9nF,5%,1.6KV,TP,29x8.5x	
..2	C431	2306-000326	C-FILM,MPPF;4.7nF,5%,1.6KV,TP,28.5x16x9m	
..2	C432	2306-000267	C-FILM,MPPF;8.2nF,5%,1.6KV,TP,28.5x18.5x	
..2	C436	2306-000235	C-FILM,MPPF;560nF,5%,400V,TP,26*22.5*14,	
..2	C438	2306-000267	C-FILM,MPPF;8.2nF,5%,1.6KV,TP,28.5x18.5x	
..2	C471	2301-001091	C-FILM,MPPF;470nF,5%,400V,TP,26x21.5x14.	
..2	C473	2306-000322	C-FILM,MPPF;12nF,5%,1.6KV,TP,29x20.5x13,	
..2	C474	2306-000326	C-FILM,MPPF;4.7nF,5%,1.6KV,TP,28.5x16x9m	
..2	C477	2301-000213	C-FILM,PEF;220nF,5%,250V,TP,21.5x11,7.5	
..2	C801	2306-000321	C-FILM,MPPF;470NF,5%,275V,TP,-,22.5	
..2	C802	2306-000321	C-FILM,MPPF;470NF,5%,275V,TP,-,22.5	
..2	C812	2401-003465	C-AL;680UF,20%,450V,GP,BK,35X60MM,2	
..2	C831	2306-000323	C-FILM,MPPF;2.2nF,5%,1.6KV,TP,28.5x15.5x	
..2	C862	2401-002225	C-AL;3300uF,20%,50V,WT,BK,22x41,7.5	
..2	C865	2401-000737	C-AL;2200uF,20%,50V,GP,TP,18x35.5,7	
..2	C868	2401-000737	C-AL;2200uF,20%,50V,GP,TP,18x35.5,7	
..2	C875	2401-002251	C-AL;470uF,20%,200V,GP,BK,25x40mm,1	
..2	C876	2401-000787	C-AL;220uF,20%,160V,GP,TP,16x31.5mm	
..2	C891	2201-000987	C-CERAMIC,DISC;2.2nF,20%,400V,Y5U,TP,12.	
..2	C892	2201-000987	C-CERAMIC,DISC;2.2nF,20%,400V,Y5U,TP,12.	
..2	CN201	AA39-00128A	LEAD CONNECTOR-ASSY;,-,-,8P,-,-,-,YBNH25	
..2	CN202	AA39-00115A	LEAD CONNECTOR-ASSY;,-,-,10P,-,-,-,YBNH2	
..2	CN203	3711-003052	CONNECTOR-HEADER;BOX,10P,1R,2.5mm,STRAGH	
..2	CN401	3711-003051	CONNECTOR-HEADER;BOX,8P,1R,2.5mm,STRAGHT	
..2	CN402	3711-003974	CONNECTOR-HEADER;BOX,12P,1R,2.5mm,STRAIG	
..2	CN801	AA39-00116A	LEAD CONNECTOR-ASSY;,-,-,12P,-,-,-,YBNH2	
..2	CN802	3711-003051	CONNECTOR-HEADER;BOX,8P,1R,2.5mm,STRAGHT	
..2	CNW406	AA39-00009A	LEAD CONNECTOR-ASSY;-,YFH800-03,S,3(2)P,	
..2	CNW809	AA39-20061G	LEAD CONNECTOR-ASSY;-,YFH800-03,S,3P,100	
⚠ ..2	D464	0402-000236	DIODE-RECTIFIER;GI824,400V,5A,-,TP	
⚠ ..2	D804	AA96-50310A	ASSY-H/S;-,POWER,AA62-30150C,RBV606,-	
...3		AA62-30150C	HEAT SINK-ES;-,A6063 EXTR,-,WHT,40(24.5)	S.N.A
...3		AA60-30003A	WASHER;-,-,-,T1.5,-,SBHG-1,-	S.N.A
...3		6003-000333	SCREW-TAPTITE;RH,+,2S,M3,L10,ZPC(YEL),SW	S.N.A
...3		0402-000549	DIODE-BRIDGE;RBV606,600V,6A,-,BK	
...3		0205-000129	GREASE-SILICON;SC102,JAPAN	S.N.A
⚠ ..2	D810	0402-000250	DIODE-RECTIFIER;RG4C,1000V,1A,-	
⚠ ..2	D854	AA96-00111C	ASSY-H/S;-,-,AA62-30013L,FML-G12S,-	
...3		0402-000233	DIODE-RECTIFIER;FML-G12S,200V,5A,-,-	
...3		6003-000333	SCREW-TAPTITE;RH,+,2S,M3,L10,ZPC(YEL),SW	S.N.A
...3		AA62-30013L	HEATSINK-ES;-,-,-,-,44/22,-,WHT,-,-,-,-	S.N.A
⚠ ..2	D871	AA96-00032A	ASSY-H/S;-,-,AA62-30173B,FMLG12, FMGG26	
...3		0402-000233	DIODE-RECTIFIER;FML-G12S,200V,5A,-,-	
...3		0402-000231	DIODE-RECTIFIER;FMG-G26S,600V,4A,TO-220F	
...3		AA62-30173B	HEAT-SINK,ES;-,-,T1.0,WHT,-,ALL,-,-,88X2	S.N.A
...3		6003-000333	SCREW-TAPTITE;RH,+,2S,M3,L10,ZPC(YEL),SW	S.N.A
...3		0205-000129	GREASE-SILICON;SC102,JAPAN	S.N.A
⚠ ..2	DZ481	0403-001327	DIODE-ZENER;MTZJ18A,16.22-17.06V,500mW,D	
⚠ ..2	F801	3601-001007	FUSE-CARTRIDGE;250V,6.3A,TIME-LAG,GLASS,	
⚠ ..2	F802	3601-001137	FUSE-AXIAL LEAD;250V,6A,SLOW-BLOW,GLASS,	
⚠ ..2	F804	3601-001007	FUSE-CARTRIDGE;250V,6.3A,TIME-LAG,GLASS,	
⚠ ..2	IC301	AA96-50381A	ASSY-H/S;-,-,AA62-30180B,LA7845,-	
...3		0205-000129	GREASE-SILICON;SC102,JAPAN	S.N.A
...3		1204-000517	IC-VERTIVAL DEF.;LA7845,SIP,7P,-,PLASTIC	
...3		6003-000333	SCREW-TAPTITE;RH,+,2S,M3,L10,ZPC(YEL),SW	S.N.A
...3		AA62-30180B	HEAT SINK-ES;-,A6063 EXTR.,2,WHT,70MM,-,	S.N.A
⚠ ..2	IC421	1203-000165	IC-POSI.ADJUST REG.;78R12,TO-220,3P,-,-,	
⚠ ..2	IC430	1203-000162	IC-POSI.ADJUST REG.;317,TO-220,3P,-,PLAS	
⚠ ..2	IC431	1201-000191	IC-OP AMP;4558,DIP,8P,300MIL,DUAL,20V/mV	
⚠ ..2	IC801	AA96-00035A	ASSY-H/S;-,POWER,AA62-30181P,STR-F6656,	
...3		0205-000129	GREASE-SILICON;SC102,JAPAN	S.N.A
...3		6003-000333	SCREW-TAPTITE;RH,+,2S,M3,L10,ZPC(YEL),SW	S.N.A
...3		AA13-00018A	IC-HYBRID;-,STR-F6656,LF1351,5PIN,-,-	
...3		AA62-30181P	HEAT-SINK,ES;-,-,T1.0,WHITE,SCREW-HOLE(2	S.N.A
⚠ ..2	IC804	1203-001400	IC-POWER PRESCALER;SE110N,T0-220(SIP),3P	
⚠ ..2	IC806	0604-001032	PHOTO-COUPLER;TR,170-260%,300mW,DIP-4,ST	
..2	L431	AA27-30003M	COIL-LINEARLITY;-,5uH,OWA14x15,USRC0.1x6	
..2	L432	AA27-40001U	COIL-HORIZ.WIDTH;-,220UH,DR1420,PI0.12X1	
..2	L482	2701-001033	INDUCTOR-AXIAL;1uH,10%,5x14mm	
..2	L800	AA29-30002L	FILTER-LINE NOISE;-,10mHMIN,5A,AC90~260V	
..2	L801	AA29-30002F	FILTER-LINE NOISE;-,6mH,2.45A,-,-	
..2	L803	AA29-00008A	FILTER-LINE NOISE;35-6MH 3A,-,6MHMIN,3A,	
..2	L854	AA27-10001C	COIL-CHOKE;-,100uH,K,-,5.0A,ST,700UH-K(R	
..2	L860	AA27-10001C	COIL-CHOKE;-,100uH,K,-,5.0A,ST,700UH-K(R	
..2	L862	AA27-10001C	COIL-CHOKE;-,100uH,K,-,5.0A,ST,700UH-K(R	
..2	L872	AA27-10001C	COIL-CHOKE;-,100uH,K,-,5.0A,ST,700UH-K(R	
..2	L874	AA27-10002L	COIL-CHOKE;-,24UH,K,-,2A,-,24UH-K,10X10M	
..2	PCB	AA41-00197B	PCB-SUB;P51A,1L,CEM-1,330x245x1.6T,1A,	S.N.A
⚠ ..2	Q431	AA96-00033C	ASSY H/S;-,H-OUT,AA62-30173C,2SC5144, F	
...3		AA60-30001A	WASHER-PLATE;M3,ID3.5,15X8.5,T1.0,-,SBHG	S.N.A
...3		AA62-30173C	HEAT SINK-ES;-,-,T1.0,WHITE,SCREW-HOLE(2	S.N.A
...3		6003-000333	SCREW-TAPTITE;RH,+,2S,M3,L10,ZPC(YEL),SW	S.N.A
...3		0502-001121	TR-POWER;2SC5144,NPN,200W,TO-3PL,BK,10-	
...3		0402-001296	DIODE-RECTIFIER;FMP-3FU,1.5KV,5A,TO-3PF,	
...3		0205-000129	GREASE-SILICON;SC102,JAPAN	S.N.A
⚠ ..2	Q433	AA96-50407A	ASSY-H/S;-,-,AA62-30154G,KSD73Y,-	
...3		0205-000129	GREASE-SILICON;SC102,JAPAN	S.N.A
...3		0502-000298	TR-POWER;KSD73,NPN,30W,TO-220,-,120-240	
...3		6003-000333	SCREW-TAPTITE;RH,+,2S,M3,L10,ZPC(YEL),SW	S.N.A
...3		AA62-30154G	HEAT SINK-ES;-,A6063 EXTR,-,WHT,50/16,-,	S.N.A
⚠ ..2	Q441	AA96-50383F	ASSY-H/S;-,-,AA62-30180D,2SD921,-	
...3		0205-000129	GREASE-SILICON;SC102,JAPAN	S.N.A
...3		0502-001104	TR-POWER;2SD921,NPN,80W,TO-3P,BK,700-	
...3		6003-000333	SCREW-TAPTITE;RH,+,2S,M3,L10,ZPC(YEL),SW	S.N.A
...3		AA62-30180D	HEAT SINK-ES;-,A6063 EXTR.,2,WHT,50mm,-,	S.N.A
⚠ ..2	Q472	0505-000156	FET-SILICON;IRF620,N,200V,5A,0.8ohm,50W,	S.N.A
⚠ ..2	Q473	AA96-00037A	ASSY-H/S;-,-,AA62-30181N,2SC4125, IRFS6	
...3		0502-001100	TR-POWER;2SC4125,NPN,70W,TO-3PML,BK,8-	
...3		AA62-30181N	HEAT-SINK,ES;-,-,T1.0,WHITE,SCREW-HOLE(2	S.N.A
...3		AA60-30001A	WASHER-PLATE;M3,ID3.5,15X8.5,T1.0,-,SBHG	S.N.A
...3		6003-000333	SCREW-TAPTITE;RH,+,2S,M3,L10,ZPC(YEL),SW	S.N.A
...3		0505-001202	FET-SILICON;IRFS640A,N,200V,9.8A,0.18ohm	S.N.A
...3		0205-000129	GREASE-SILICON;SC102,JAPAN	S.N.A
..2	R440	2008-001091	R-FUSIBLE(S);0.47OHM,10%,1/2W,AC,BK,2.5X	
..2	R442	2008-000189	R-FUSIBLE;0.47ohm,10%,2W,AA,TP,6x15.5mm	
..2	R445	2008-001091	R-FUSIBLE(S);0.47OHM,10%,1/2W,AC,BK,2.5X	
..2	R803	1404-001195	THERMISTOR-NTC;5.1ohm,15%,2900,27mW/C,BK	
..2	R815	2003-002162	R-METAL OXIDE(S);15KOHM,5%,3W,AG,TP,6X16	
..2	R815A	2003-002162	R-METAL OXIDE(S);15KOHM,5%,3W,AG,TP,6X16	
..2	R817	2009-001096	R-METAL PLATE;0.07ohm,5%,5W,CL,BK,5x14x1	
..2	R841	2008-001096	R-FUSIBLE(S);3.3OHM,5%,1/2W,AC,BK,2.5X6.	
⚠ ..2	T431	AA26-50001U	TRANS-HORIZ.DRIVE;-,28mH,105uH,4uH,ER28x	
⚠ ..2	T432	AA26-00053A	TRANS;-,1.2mH,-,-,EER4445,BK,1.2mH,-	
⚠ ..2	T444	AA26-30005A	TRANS-FLYBACK;-,FWZ-50A001,50,108V	
⚠ ..2	T461	AA26-50001V	TRANS-HORIZ.DRIVE;-,6.0mH,113uH,4uH,EI19	
⚠ ..2	T481	AA26-50001W	TRANS-HORIZ.DRIVE;-,830uH,23uH,4uH,EI-30	
⚠ ..2	T802	AA26-00006A	TRANS-SWITCHING;-,90~260V,110V/34V/+-30V	
..2		0202-000187	SOLDER-WIRE FLUX;-,RS60S,D1.2,63Sn/37Pb	S.N.A
..2		AA65-30110A	CLAMP-WIRE;NYLON 66,V2,BLK,PAL TVI,ALL M	S.N.A
..2		0403-001325	DIODE-ZENER;MTZJ15C,14.35-15.09V,500mW,D	
..2		AA65-30109A	CLAMP-FBT;NYLON-66,V2,BLK,-,-,-	S.N.A
..2		AA62-00010A	HEAT SINK;-,-,T1.0,SILVER,H/SINK & SHIEL	S.N.A
..2		AA99-20069B	ASSY-PCB SUB,AUTO; AA95-00425B ,V	S.N.A
...3	C301	2305-000149	C-FILM,MPEF;100nF,5%,100V,TP,12x12.5x6.5	
...3	C302	2201-000292	C-CERAMIC,DISC;1nF,10%,50V,Y5P,TP,5x3.5,	
...3	C303	2305-000149	C-FILM,MPEF;100nF,5%,100V,TP,12x12.5x6.5	
...3	C304	2201-000292	C-CERAMIC,DISC;1nF,10%,50V,Y5P,TP,5x3.5,	
...3	C305	2201-002022	C-CERAMIC,DISC;0.005nF,0.25pF,500V,NP0,T	
...3	C307	2401-000365	C-AL;100uF,20%,50V,WT,TP,10x12.5mm,	
...3	C308	2401-000365	C-AL;100uF,20%,50V,WT,TP,10x12.5mm,	
...3	C309	2305-000285	C-FILM,MPEF;220NF,5%,100V,TP,10.5X5.5X15	
...3	C311	2305-000149	C-FILM,MPEF;100nF,5%,100V,TP,12x12.5x6.5	
...3	C412	2301-000383	C-FILM,PEF;10nF,5%,50V,TP,6x7x3.2mm,5mm	
...3	C413	2401-000360	C-AL;100uF,20%,50V,GP,TP,8x11.5,5	
...3	C417	2401-001397	C-AL;470uF,20%,25V,GP,TP,10x16,5	
...3	C418	2401-000360	C-AL;100uF,20%,50V,GP,TP,8x11.5,5	
...3	C419	2201-000180	C-CERAMIC,DISC;10nF,10%,50V,Y5V,TP,7x3,5	
...3	C426	2401-000360	C-AL;100uF,20%,50V,GP,TP,8x11.5,5	
...3	C427	2401-002300	C-AL;47uF,20%,50V,GP,TP,6.3x11,5	
...3	C428	2306-000122	C-FILM,MPPF;100nF,5%,50V,TP,7.3x4.0x5.0m	
...3	C437	2401-003114	C-AL;4.7uF,20%,250V,WT,TP,10x16,5	
...3	C441	2401-000262	C-AL;100uF,20%,160V,HR,TP,16x25,7.5	
...3	C445	2401-001622	C-AL;6.8uF,20%,50V,BP,TP,16x25mm,7.	
...3	C450	2401-000262	C-AL;100uF,20%,160V,HR,TP,16x25,7.5	
...3	C451	2401-001160	C-AL;33uF,20%,160V,GP,-,16x35mm,7.5	
...3	C452	2201-000132	C-CERAMIC,DISC;0.1nF,10%,500V,Y5P,TP,6.5	
...3	C453	2401-002288	C-AL;470uF,20%,25V,WT,TP,10x20,5	
...3	C454	2401-001429	C-AL;470uF,20%,50V,GP,TP,13x20,5	
...3	C455	2201-000132	C-CERAMIC,DISC;0.1nF,10%,500V,Y5P,TP,6.5	

MEMO

...3	C457	2201-000132	C-CERAMIC,DISC;0.1nF,10%,500V,Y5P,TP,6.5	
...3	C458	2401-002288	C-AL;470uF,20%,25V,WT,TP,10x20,5	
...3	C467	2401-000360	C-AL;100uF,20%,50V,GP,TP,8x11.5,5	
...3	C468	2201-000119	C-CERAMIC,DISC;100nF,+80-20%,50V,Y5V,TP,	
...3	C469	2201-000180	C-CERAMIC,DISC;10nF,10%,50V,Y5V,TP,7x3,5	
...3	C472	2401-000262	C-AL;100uF,20%,160V,HR,TP,16x25,7.5	
...3	C476	2401-000647	C-AL;2.2uF,20%,50V,BP,TP,5x11,5	
...3	C478	2301-000020	C-FILM,PEF;27nF,5%,100V,TP,7.3x4x12.5mm,	
...3	C479	2301-000200	C-FILM,PEF;2.2nF,5%,200V,TP,11.0x6.0x9.0	
...3	C483	2401-000660	C-AL;2.2uF,20%,50V,GP,TP,5x11,5	
...3	C484	2201-000132	C-CERAMIC,DISC;0.1nF,10%,500V,Y5P,TP,6.5	
...3	C809	2201-000551	C-CERAMIC,DISC;0.47nF,10%,1kV,Y5P,TP,6.3	
...3	C814	2201-002041	C-CERAMIC,DISC;0.82nF,10%,2kV,Y5P,TP,9x5	
...3	C815	2201-000406	C-CERAMIC,DISC;0.27nF,10%,2kV,Y5P,TP,6.3	
...3	C816	2201-000332	C-CERAMIC,DISC;2.2nF,20%,250V,Y5U,TP,9x4	
...3	C817	2201-000332	C-CERAMIC,DISC;2.2nF,20%,250V,Y5U,TP,9x4	
...3	C818	2301-001216	C-FILM,PPF;47nF,5%,630V,TP,20x14.5x22,7.	
...3	C819	2201-000332	C-CERAMIC,DISC;2.2nF,20%,250V,Y5U,TP,9x4	
...3	C833	2201-000292	C-CERAMIC,DISC;1nF,10%,50V,Y5P,TP,5x3.5,	
...3	C834	2401-003028	C-AL;100uF,20%,25V,WT,TP,6.3x11,5	
...3	C851	2201-000551	C-CERAMIC,DISC;0.47nF,10%,1kV,Y5P,TP,6.3	
...3	C852	2401-000133	C-AL;1000uF,20%,16V,GP,TP,10x20,5	
...3	C854	2201-000551	C-CERAMIC,DISC;0.47nF,10%,1kV,Y5P,TP,6.3	
...3	C855	2401-003141	C-AL;2200uF,20%,25V,WT,TP,13x25,5mm	
...3	C857	2401-000133	C-AL;1000uF,20%,16V,GP,TP,10x20,5	
...3	C861	2201-000551	C-CERAMIC,DISC;0.47nF,10%,1kV,Y5P,TP,6.3	
...3	C864	2201-000551	C-CERAMIC,DISC;0.47nF,10%,1kV,Y5P,TP,6.3	
...3	C866	2401-000192	C-AL;1000uF,20%,50V,GP,TP,16x25,7.5	
...3	C869	2401-000192	C-AL;1000uF,20%,50V,GP,TP,16x25,7.5	
...3	C871	2201-000551	C-CERAMIC,DISC;0.47nF,10%,1kV,Y5P,TP,6.3	
...3	C872	2401-000703	C-AL;2200uF,20%,25V,GP,-,12.5x25mm,	
...3	C873	2401-001998	C-AL;1000uF,20%,25V,GP,TP,10x20,5mm	
...3	C874	2201-000551	C-CERAMIC,DISC;0.47nF,10%,1kV,Y5P,TP,6.3	
...3	C877	2305-000427	C-FILM,MPEF;47nF,5%,100V,TP,7.5x12.5x3.5	
...3	D302	0402-000546	DIODE-RECTIFIER;TVR10G,400V,1.0A,DO-41,T	
⚠ ...3	D433	0402-000537	DIODE-RECTIFIER;RH1A,600V,0.6A,DO-204AC	
⚠ ...3	D435	0402-000132	DIODE-RECTIFIER;1N4004,400V,1A,DO-41,TP	
⚠ ...3	D436	0401-000005	DIODE-SWITCHING;1N4148,100V,200MA,DO-35,	
⚠ ...3	D438	0402-000546	DIODE-RECTIFIER;TVR10G,400V,1.0A,DO-41,T	
⚠ ...3	D440	0402-000534	DIODE-RECTIFIER;RG10V,400V,1.2A,DO-201,T	
⚠ ...3	D441	0402-000534	DIODE-RECTIFIER;RG10V,400V,1.2A,DO-201,T	
⚠ ...3	D444	0402-000546	DIODE-RECTIFIER;TVR10G,400V,1.0A,DO-41,T	
⚠ ...3	D445	0402-000534	DIODE-RECTIFIER;RG10V,400V,1.2A,DO-201,T	
⚠ ...3	D472	0402-000546	DIODE-RECTIFIER;TVR10G,400V,1.0A,DO-41,T	
⚠ ...3	D474	0402-000546	DIODE-RECTIFIER;TVR10G,400V,1.0A,DO-41,T	
⚠ ...3	D801	1405-000187	VARISTOR;750V,1250A,12.5x7mm,TP	
⚠ ...3	D802	1405-000187	VARISTOR;750V,1250A,12.5x7mm,TP	
⚠ ...3	D834	0402-000546	DIODE-RECTIFIER;TVR10G,400V,1.0A,DO-41,T	
⚠ ...3	D843	0402-000546	DIODE-RECTIFIER;TVR10G,400V,1.0A,DO-41,T	
⚠ ...3	D851	0402-000493	DIODE-RECTIFIER;1R5GU41,400V,1.5A,DO-15L	
...3	DZ301	0403-001328	DIODE-ZENER;MTZJ22A,20.15-21.20V,500mW,D	
...3	DZ304	0403-001327	DIODE-ZENER;MTZJ18A,16.22-17.06V,500mW,D	
...3	DZ305	0403-001329	DIODE-ZENER;MTZJ24B,22.61-23.77V,500mW,D	
...3	DZ306	0403-001167	DIODE-ZENER;MTZJ30D,30V,29.02-30.51V,500	
...3	DZ307	0403-001329	DIODE-ZENER;MTZJ24B,22.61-23.77V,500mW,D	
...3	DZ413	0403-001319	DIODE-ZENER;MTZJ4.7C,4.68-4.93V,500mW,DO	
...3	DZ473	0403-000720	DIODE-ZENER;MTZJ9.1B,9.1V,8.57-9.01V,500	
...3	DZ842	0403-000700	DIODE-ZENER;TZP33A,33V,31-35V,1W,DO-41,T	
...3	DZ858	0403-001325	DIODE-ZENER;MTZJ15C,14.35-15.09V,500mW,D	
...3	F801A	3602-000114	FUSE-HOLDER;-,-,30mohm	S.N.A
...3	F801B	3602-000114	FUSE-HOLDER;-,-,30mohm	S.N.A
...3	F804A	3602-000114	FUSE-HOLDER;-,-,30mohm	S.N.A
...3	F804B	3602-000114	FUSE-HOLDER;-,-,30mohm	S.N.A
⚠ ...3	F805	3601-001086	FUSE-AXIAL LEAD;125V,5A,FAST-ACTING,GLAS	
⚠ ...3	F806	3601-001065	FUSE-AXIAL LEAD;125V,3.5A,FAST-ACTING,CE	
⚠ ...3	F854	3601-001086	FUSE-AXIAL LEAD;125V,5A,FAST-ACTING,GLAS	
⚠ ...3	F855	3601-001086	FUSE-AXIAL LEAD;125V,5A,FAST-ACTING,GLAS	
⚠ ...3	F871	3601-001086	FUSE-AXIAL LEAD;125V,5A,FAST-ACTING,GLAS	
...3	L481	3301-000287	CORE-FERRITE BEAD;AA,3.5x1.0x6.0mm,1500,	
...3	L483	2901-000299	FILTER-EMI ON BOARD;-,6A,UL/CSA,-,9x7.5,	
...3	L492	2701-000115	INDUCTOR-AXIAL;10uH,10%,3x7mm	
...3	L493	2901-000297	FILTER-EMI ON BOARD;-,3A,-,-,3.5x5,TP,-	
...3	L494	3301-000287	CORE-FERRITE BEAD;AA,3.5x1.0x6.0mm,1500,	
...3	L495	2901-000297	FILTER-EMI ON BOARD;-,3A,-,-,3.5x5,TP,-	
...3	L806	2901-000297	FILTER-EMI ON BOARD;-,3A,-,-,3.5x5,TP,-	
...3	L807	2901-000297	FILTER-EMI ON BOARD;-,3A,-,-,3.5x5,TP,-	
...3	L808	3301-000287	CORE-FERRITE BEAD;AA,3.5x1.0x6.0mm,1500,	
...3	L810	2901-000297	FILTER-EMI ON BOARD;-,3A,-,-,3.5x5,TP,-	
...3	L811	2901-000297	FILTER-EMI ON BOARD;-,3A,-,-,3.5x5,TP,-	
...3	L812	2901-000297	FILTER-EMI ON BOARD;-,3A,-,-,3.5x5,TP,-	
...3	L813	2901-000297	FILTER-EMI ON BOARD;-,3A,-,-,3.5x5,TP,-	
...3	L814	3301-000287	CORE-FERRITE BEAD;AA,3.5x1.0x6.0mm,1500,	
...3	L815	2901-000297	FILTER-EMI ON BOARD;-,3A,-,-,3.5x5,TP,-	
...3	L816	2901-000297	FILTER-EMI ON BOARD;-,3A,-,-,3.5x5,TP,-	
...3	L831	3301-000287	CORE-FERRITE BEAD;AA,3.5x1.0x6.0mm,1500,	
...3	L832	3301-000287	CORE-FERRITE BEAD;AA,3.5x1.0x6.0mm,1500,	
...3	L851	2901-000297	FILTER-EMI ON BOARD;-,3A,-,-,3.5x5,TP,-	
...3	L857	3301-000287	CORE-FERRITE BEAD;AA,3.5x1.0x6.0mm,1500,	
...3	L859	3301-000287	CORE-FERRITE BEAD;AA,3.5x1.0x6.0mm,1500,	
...3	Q301	0501-000389	TR-SMALL SIGNAL;KSC815,NPN,400mW,TO-92,T	
...3	Q432	0501-000283	TR-SMALL SIGNAL;KSA539,PNP,400mW,TO-92,T	
...3	R301	2004-001897	R-METAL(S);43.2Kohm,1%,1/2W,AA,TP,2.5x6.	
...3	R302	2004-001897	R-METAL(S);43.2Kohm,1%,1/2W,AA,TP,2.5x6.	
...3	R303	2004-001984	R-METAL(S);26.7Kohm,1%,1/2W,AA,TP,2.4x6.	
...3	R305	2004-001984	R-METAL(S);26.7Kohm,1%,1/2W,AA,TP,2.4x6.	
...3	R306	2003-001036	R-METAL OXIDE(S);3.3ohm,5%,2W,AF,TP,3.9x	
...3	R307	2003-001036	R-METAL OXIDE(S);3.3ohm,5%,2W,AF,TP,3.9x	
...3	R308	2001-000016	R-CARBON(S);1OHM,5%,1/2W,AA,TP,2.4X6.4MM	
...3	R310	2003-002150	R-METAL OXIDE;270OHM,5%,2W,AG,TP,6X16MM	
...3	R312	2001-000290	R-CARBON;10KOHM,5%,1/8W,AA,TP,1.8X3.2MM	
...3	R313	2001-000761	R-CARBON;430OHM,5%,1/8W,AA,TP,1.8X3.2MM	
...3	R314	2001-000761	R-CARBON;430OHM,5%,1/8W,AA,TP,1.8X3.2MM	
...3	R332	2001-001107	R-CARBON(S);220ohm,5%,1/2W,AA,TP,2.4x6.4	
...3	R333	2001-001107	R-CARBON(S);220ohm,5%,1/2W,AA,TP,2.4x6.4	
...3	R334	2001-001107	R-CARBON(S);220ohm,5%,1/2W,AA,TP,2.4x6.4	
...3	R405	2009-001109	R-TEMPERATURE;240ohm,5%,1/4W,AA,TP,2.3x6	
...3	R406	2004-001983	R-METAL(S);2.49Kohm,1%,1/2W,AA,TP,2.4x6.	
...3	R407	2004-001897	R-METAL(S);43.2Kohm,1%,1/2W,AA,TP,2.5x6.	
...3	R408	2004-001402	R-METAL(S);6.8Kohm,1%,1/2W,AA,TP,2.4x6.4	
...3	R409	2001-001178	R-CARBON(S);680OHM,5%,1/2W,AA,TP,2.4X6.4	
...3	R410	2001-000052	R-CARBON(S);3.3KOHM,5%,1/2W,AA,TP,2.4X6.	
...3	R412	2001-000362	R-CARBON;150OHM,5%,1/8W,AA,TP,1.8X3.2MM	
...3	R419	2001-000290	R-CARBON;10KOHM,5%,1/8W,AA,TP,1.8X3.2MM	
...3	R424	2008-000299	R-FUSIBLE(S);47ohm,5%,2W,AF,TP,3.9x10mm	
...3	R426	2003-002153	R-METAL OXIDE;4.7OHM,5%,2W,AG,TP,6X16MM	
...3	R427	2003-002152	R-METAL OXIDE;1OHM,5%,2W,AG,TP,6X16MM	
...3	R427A	2003-002152	R-METAL OXIDE;1OHM,5%,2W,AG,TP,6X16MM	
...3	R428	2002-001017	R-COMPOSITION;1Kohm,10%,1/2W,AA,TP,3.7x9	
...3	R428A	2002-001017	R-COMPOSITION;1Kohm,10%,1/2W,AA,TP,3.7x9	
...3	R429	2003-000586	R-METAL OXIDE(S);22Kohm,5%,2W,AF,TP,4x12	
...3	R430	2003-000586	R-METAL OXIDE(S);22Kohm,5%,2W,AF,TP,4x12	
...3	R433	2001-001155	R-CARBON(S);5.6KOHM,5%,1/2W,AA,TP,2.4X6.	
...3	R434	2001-001093	R-CARBON(S);2.2KOHM,5%,1/2W,AA,TP,2.4x6.	
...3	R441	2008-000189	R-FUSIBLE;0.47ohm,10%,2W,AA,TP,6x15.5mm	
...3	R444	2003-000995	R-METAL OXIDE(S);3.3Kohm,5%,2W,AF,TP,3.9	
...3	R462	2003-002026	R-METAL OXIDE(S);4.7ohm,5%,1W,AF,TP,2.5x	
...3	R463	2003-001024	R-METAL OXIDE(S);150ohm,5%,2W,AF,TP,3.9x	
...3	R464	2003-002158	R-METAL OXIDE;0.68OHM,5%,1W,AG,TP,4.3X12	
...3	R465	2001-001043	R-CARBON(S);0OHM,5%,1/2W,AA,TP,2.4X6.4MM	
...3	R466	2004-001386	R-METAL(S);16.9Kohm,1%,1/2W,AA,TP,2.4x6.	
...3	R467	2004-001986	R-METAL(S);35.7Kohm,1%,1/2W,AA,TP,2.4x6.	
...3	R468	2001-001122	R-CARBON(S);3.9KOHM,5%,1/2W,AA,TP,2.4X6.	
...3	R469	2004-001390	R-METAL(S);1Kohm,2%,1/2W,AA,TP,2.4x6.4mm	
...3	R470	2001-000028	R-CARBON(S);100OHM,5%,1/2W,AA,TP,2.4X6.4	
...3	R471	2004-002011	R-METAL(S);110Kohm,1%,1/2W,AA,TP,2.4x6.4	
...3	R472	2008-000252	R-FUSIBLE(S);0.47ohm,10%,1/2W,AF,TP,2.5x	
...3	R473	2004-001395	R-METAL(S);330Kohm,2%,1/2W,AA,TP,2.4x6.4	
...3	R486	2003-002014	R-METAL OXIDE(S);0.6OHM,5%,2W,AF,TP,3.9X	
...3	R488	2001-000273	R-CARBON;100KOHM,5%,1/8W,AA,TP,1.8X3.2M	
...3	R808	2001-000002	R-CARBON(S);200KOHM,5%,1/2W,AA,TP,6.4X2.	
...3	R808A	2001-000002	R-CARBON(S);200KOHM,5%,1/2W,AA,TP,6.4X2.	
...3	R810	2002-001010	R-COMPOSITION;1.8Mohm,5%,1/2W,AA,TP,3.7x	
...3	R812	2003-002151	R-METAL OXIDE;18KOHM,5%,2W,AG,TP,6X16MM	
...3	R814	2003-002151	R-METAL OXIDE;18KOHM,5%,2W,AG,TP,6X16MM	
...3	R816	2004-004029	R-METAL(S);10Kohm,1%,1/2W,AA,TP,2.5x6.5m	
...3	R825	2002-001010	R-COMPOSITION;1.8Mohm,5%,1/2W,AA,TP,3.7x	
...3	R832	2001-001178	R-CARBON(S);680OHM,5%,1/2W,AA,TP,2.4X6.4	
...3	R834	2001-001097	R-CARBON(S);2.4KOHM,5%,1/2W,AA,TP,2.4X6.	
...3	R837	2001-001097	R-CARBON(S);2.4KOHM,5%,1/2W,AA,TP,2.4X6.	
...3	R838	2001-001097	R-CARBON(S);2.4KOHM,5%,1/2W,AA,TP,2.4X6.	
...3	R855	2001-001196	R-CARBON(S);9.1KOHM,5%,1/2W,AA,TP,2.4X6.	
...3	R856	2001-001155	R-CARBON(S);5.6KOHM,5%,1/2W,AA,TP,2.4X6.	

Level	Loc. No.	Code No.	Description ; Specification	Remark
...3	R857	2001-001155	R-CARBON(S);5.6KOHM,5%,1/2W,AA,TP,2.4X6.	
...3	R871	2001-001088	R-CARBON(S);1KOHM,5%,1/2W,AA,TP,2.4X6.4M	
...3	R872	2001-001088	R-CARBON(S);1KOHM,5%,1/2W,AA,TP,2.4X6.4M	
...3	R873	2001-001097	R-CARBON(S);2.4KOHM,5%,1/2W,AA,TP,2.4X6.	
...3	R891	2002-001012	R-COMPOSITION;8.2Mohm,5%,1/2W,AA,TP,3.7x	
...3	VR471	2103-001024	VR-SEMI;50Kohm,25%,0.3W,TOP	
..2		AA65-30105B	CLAMP-WIRE;NYLON 66,V2,NTR,25MM,ALL MODE	S.N.A
..2		6003-001023	SCREW-TAPTITE;RWH,+,B,M3,L10,ZPC(YEL),SW	S.N.A

ASSY-PCB,CONV MDL

Level	Loc. No.	Code No.	Description ; Specification	Remark
1	*	AA95-00422B	ASSY-PCB,CONV MDL;-,SP43J5HP,J51A,-,-,-	
..2	C163	2305-000289	C-FILM,MPEF;220nF,5%,63V,TP,-,5mm	
..2	CN101	3711-002709	CONNECTOR-HEADER;NOWALL,12P,1R,2.5MM,ANG	
..2	CN102	3711-002709	CONNECTOR-HEADER;NOWALL,12P,1R,2.5MM,ANG	
⚠ ..2	IC113	1203-000641	IC-RESET;7442,TO-92,3P,-,PLASTIC,-0.3/7	
..2		0202-001004	SOLDER-CREAM;SQ-2030M SZH-1,S63A,D0.04,6	S.N.A
..2		0202-000187	SOLDER-WIRE FLUX;-,RS60S,D1.2,63Sn/37Pb	S.N.A
..2		AA63-00143A	SHIELD-CASE;-,SPTE T0.5,T0.5,ALLMIGHT,CO	S.N.A
..2		AA99-20068A	ASSY-PCB SUB,AUTO; AA95-00422B ,V	S.N.A
...3	C101	2404-000275	C-TA,CHIP;100UF,10%,10V,GP,TP,7343	
...3	C102	2404-000275	C-TA,CHIP;100UF,10%,10V,GP,TP,7343	
...3	C103	2404-000256	C-TA,CHIP;47UF,20%,16V,GP,TP,7343	
...3	C104	2203-000218	C-CERAMIC,CHIP;100nF,20%,50V,Y5V,TP,2012	
...3	C105	2203-000858	C-CERAMIC,CHIP;0.039nF,5%,50V,NP0,TP,201	
...3	C106	2203-000218	C-CERAMIC,CHIP;100nF,20%,50V,Y5V,TP,2012	
...3	C107	2203-000716	C-CERAMIC,CHIP;3.3nF,10%,50V,X7R,TP,2012	
...3	C108	2203-000218	C-CERAMIC,CHIP;100nF,20%,50V,Y5V,TP,2012	
...3	C109	2203-000218	C-CERAMIC,CHIP;100nF,20%,50V,Y5V,TP,2012	
...3	C110	2203-000444	C-CERAMIC,CHIP;1nF,10%,50V,X7R,TP,2012,-	
...3	C111	2203-000218	C-CERAMIC,CHIP;100nF,20%,50V,Y5V,TP,2012	
...3	C112	2203-000683	C-CERAMIC,CHIP;0.027nF,5%,50V,NP0,TP,201	
...3	C113	2203-000683	C-CERAMIC,CHIP;0.027nF,5%,50V,NP0,TP,201	
...3	C114	2203-000218	C-CERAMIC,CHIP;100nF,20%,50V,Y5V,TP,2012	
...3	C115	2203-000218	C-CERAMIC,CHIP;100nF,20%,50V,Y5V,TP,2012	
...3	C116	2203-000218	C-CERAMIC,CHIP;100nF,20%,50V,Y5V,TP,2012	
...3	C117	2203-000218	C-CERAMIC,CHIP;100nF,20%,50V,Y5V,TP,2012	
...3	C118	2203-000218	C-CERAMIC,CHIP;100nF,20%,50V,Y5V,TP,2012	
...3	C119	2203-000218	C-CERAMIC,CHIP;100nF,20%,50V,Y5V,TP,2012	
...3	C120	2203-000218	C-CERAMIC,CHIP;100nF,20%,50V,Y5V,TP,2012	
...3	C121	2203-000218	C-CERAMIC,CHIP;100nF,20%,50V,Y5V,TP,2012	
...3	C122	2203-000218	C-CERAMIC,CHIP;100nF,20%,50V,Y5V,TP,2012	
...3	C123	2203-000218	C-CERAMIC,CHIP;100nF,20%,50V,Y5V,TP,2012	
...3	C124	2203-000218	C-CERAMIC,CHIP;100nF,20%,50V,Y5V,TP,2012	
...3	C125	2203-000218	C-CERAMIC,CHIP;100nF,20%,50V,Y5V,TP,2012	
...3	C126	2203-000218	C-CERAMIC,CHIP;100nF,20%,50V,Y5V,TP,2012	
...3	C127	2203-000218	C-CERAMIC,CHIP;100nF,20%,50V,Y5V,TP,2012	
...3	C128	2203-000218	C-CERAMIC,CHIP;100nF,20%,50V,Y5V,TP,2012	
...3	C129	2203-000218	C-CERAMIC,CHIP;100nF,20%,50V,Y5V,TP,2012	
...3	C130	2203-000218	C-CERAMIC,CHIP;100nF,20%,50V,Y5V,TP,2012	
...3	C131	2203-000218	C-CERAMIC,CHIP;100nF,20%,50V,Y5V,TP,2012	
...3	C132	2203-000408	C-CERAMIC,CHIP;0.18nF,5%,50V,NP0,TP,2012	
...3	C133	2404-001098	C-TA,CHIP;1uF,20%,25V,GP,TP,3216,-	
...3	C134	2203-000218	C-CERAMIC,CHIP;100nF,20%,50V,Y5V,TP,2012	
...3	C135	2203-000716	C-CERAMIC,CHIP;3.3nF,10%,50V,X7R,TP,2012	
...3	C136	2203-000218	C-CERAMIC,CHIP;100nF,20%,50V,Y5V,TP,2012	
...3	C137	2203-000716	C-CERAMIC,CHIP;3.3nF,10%,50V,X7R,TP,2012	
...3	C138	2203-000408	C-CERAMIC,CHIP;0.18nF,5%,50V,NP0,TP,2012	
...3	C139	2203-000218	C-CERAMIC,CHIP;100nF,20%,50V,Y5V,TP,2012	
...3	C140	2404-001098	C-TA,CHIP;1uF,20%,25V,GP,TP,3216,-	
...3	C141	2203-000408	C-CERAMIC,CHIP;0.18nF,5%,50V,NP0,TP,2012	
...3	C142	2404-001098	C-TA,CHIP;1uF,20%,25V,GP,TP,3216,-	
...3	C143	2203-000218	C-CERAMIC,CHIP;100nF,20%,50V,Y5V,TP,2012	
...3	C144	2203-000716	C-CERAMIC,CHIP;3.3nF,10%,50V,X7R,TP,2012	
...3	C145	2203-000218	C-CERAMIC,CHIP;100nF,20%,50V,Y5V,TP,2012	
...3	C146	2203-000716	C-CERAMIC,CHIP;3.3nF,10%,50V,X7R,TP,2012	
...3	C147	2203-000408	C-CERAMIC,CHIP;0.18nF,5%,50V,NP0,TP,2012	
...3	C148	2404-001098	C-TA,CHIP;1uF,20%,25V,GP,TP,3216,-	
...3	C149	2203-000218	C-CERAMIC,CHIP;100nF,20%,50V,Y5V,TP,2012	
...3	C150	2203-000218	C-CERAMIC,CHIP;100nF,20%,50V,Y5V,TP,2012	
...3	C151	2203-000408	C-CERAMIC,CHIP;0.18nF,5%,50V,NP0,TP,2012	
...3	C152	2404-001098	C-TA,CHIP;1uF,20%,25V,GP,TP,3216,-	
...3	C153	2203-000218	C-CERAMIC,CHIP;100nF,20%,50V,Y5V,TP,2012	
...3	C154	2203-000716	C-CERAMIC,CHIP;3.3nF,10%,50V,X7R,TP,2012	
...3	C155	2203-000218	C-CERAMIC,CHIP;100nF,20%,50V,Y5V,TP,2012	
...3	C156	2203-000716	C-CERAMIC,CHIP;3.3nF,10%,50V,X7R,TP,2012	
...3	C157	2203-000408	C-CERAMIC,CHIP;0.18nF,5%,50V,NP0,TP,2012	
...3	C158	2404-001098	C-TA,CHIP;1uF,20%,25V,GP,TP,3216,-	
...3	C159	2203-000218	C-CERAMIC,CHIP;100nF,20%,50V,Y5V,TP,2012	
...3	C160	2203-000218	C-CERAMIC,CHIP;100nF,20%,50V,Y5V,TP,2012	
...3	C161	2404-000256	C-TA,CHIP;47UF,20%,16V,GP,TP,7343	
...3	C162	2404-000256	C-TA,CHIP;47UF,20%,16V,GP,TP,7343	
...3	C164	2404-001229	C-TA,CHIP;4.7uF,20%,25V,GP,TP,3528	
...3	C165	2203-000218	C-CERAMIC,CHIP;100nF,20%,50V,Y5V,TP,2012	
...3	C166	2203-000218	C-CERAMIC,CHIP;100nF,20%,50V,Y5V,TP,2012	
...3	C167	2404-000123	C-TA,CHIP;10uF,20%,16V,-,TP,6032,2.9mm	
...3	C168	2203-000218	C-CERAMIC,CHIP;100nF,20%,50V,Y5V,TP,2012	
...3	C169	2203-000218	C-CERAMIC,CHIP;100nF,20%,50V,Y5V,TP,2012	
...3	C170	2203-000218	C-CERAMIC,CHIP;100nF,20%,50V,Y5V,TP,2012	
...3	C171	2404-001098	C-TA,CHIP;1uF,20%,25V,GP,TP,3216,-	
...3	C172	2404-000256	C-TA,CHIP;47UF,20%,16V,GP,TP,7343	
...3	C173	2404-000256	C-TA,CHIP;47UF,20%,16V,GP,TP,7343	
...3	C174	2404-000256	C-TA,CHIP;47UF,20%,16V,GP,TP,7343	
...3	C201	2203-000408	C-CERAMIC,CHIP;0.18nF,5%,50V,NP0,TP,2012	
...3	C202	2203-000408	C-CERAMIC,CHIP;0.18nF,5%,50V,NP0,TP,2012	
...3	C203	2203-000408	C-CERAMIC,CHIP;0.18nF,5%,50V,NP0,TP,2012	
...3	C204	2203-000408	C-CERAMIC,CHIP;0.18nF,5%,50V,NP0,TP,2012	
...3	C205	2203-000408	C-CERAMIC,CHIP;0.18nF,5%,50V,NP0,TP,2012	
...3	C206	2203-000408	C-CERAMIC,CHIP;0.18nF,5%,50V,NP0,TP,2012	
...3	D101	0401-000160	DIODE-SWITCHING;ISS314,30V,100mA,USC,TP	
...3	D102	0401-000160	DIODE-SWITCHING;ISS314,30V,100mA,USC,TP	
...3	DZ101	0403-001016	DIODE-ZENER;RLZ6.2B,6.2V,5.96-6.27V,400m	
...3	DZ102	0403-001016	DIODE-ZENER;RLZ6.2B,6.2V,5.96-6.27V,400m	
...3	DZ104	0403-001016	DIODE-ZENER;RLZ6.2B,6.2V,5.96-6.27V,400m	
...3	DZ105	0403-001016	DIODE-ZENER;RLZ6.2B,6.2V,5.96-6.27V,400m	
...3	DZ106	0403-001016	DIODE-ZENER;RLZ6.2B,6.2V,5.96-6.27V,400m	
...3	DZ107	0403-001016	DIODE-ZENER;RLZ6.2B,6.2V,5.96-6.27V,400m	
...3	DZ108	0403-001016	DIODE-ZENER;RLZ6.2B,6.2V,5.96-6.27V,400m	
...3	DZ109	0403-001016	DIODE-ZENER;RLZ6.2B,6.2V,5.96-6.27V,400m	
...3	DZ110	0403-001016	DIODE-ZENER;RLZ6.2B,6.2V,5.96-6.27V,400m	
...3	DZ111	0403-001016	DIODE-ZENER;RLZ6.2B,6.2V,5.96-6.27V,400m	
...3	DZ112	0403-001016	DIODE-ZENER;RLZ6.2B,6.2V,5.96-6.27V,400m	
...3	DZ113	0403-001016	DIODE-ZENER;RLZ6.2B,6.2V,5.96-6.27V,400m	
...3	DZ114	0403-001016	DIODE-ZENER;RLZ6.2B,6.2V,5.96-6.27V,400m	
...3	DZ115	0403-001016	DIODE-ZENER;RLZ6.2B,6.2V,5.96-6.27V,400m	
...3	DZ116	0403-001016	DIODE-ZENER;RLZ6.2B,6.2V,5.96-6.27V,400m	
...3	DZ117	0403-001284	DIODE-ZENER;RLZ3.3A,3.16-3.38V,500MW,LL-	
...3	EF101	2901-000229	FILTER-EMI SMD;50V,0.3A,-,22000pF,4.5x3.	
...3	EF102	2901-000229	FILTER-EMI SMD;50V,0.3A,-,22000pF,4.5x3.	
...3	EF104	2901-000226	FILTER-EMI SMD;25V,0.3A,-,100pF,3.2x1.25	
...3	EF105	2901-000226	FILTER-EMI SMD;25V,0.3A,-,100pF,3.2x1.25	
...3	EF106	2901-000226	FILTER-EMI SMD;25V,0.3A,-,100pF,3.2x1.25	
...3	EF107	2901-000226	FILTER-EMI SMD;25V,0.3A,-,100pF,3.2x1.25	
...3	EF108	2901-000226	FILTER-EMI SMD;25V,0.3A,-,100pF,3.2x1.25	
...3	EF109	2901-000226	FILTER-EMI SMD;25V,0.3A,-,100pF,3.2x1.25	
...3	EF110	2901-000226	FILTER-EMI SMD;25V,0.3A,-,100pF,3.2x1.25	
...3	EF111	2901-000226	FILTER-EMI SMD;25V,0.3A,-,100pF,3.2x1.25	
...3	EF112	2901-000226	FILTER-EMI SMD;25V,0.3A,-,100pF,3.2x1.25	
...3	EF113	2901-000226	FILTER-EMI SMD;25V,0.3A,-,100pF,3.2x1.25	
...3	EF114	2901-000226	FILTER-EMI SMD;25V,0.3A,-,100pF,3.2x1.25	
...3	EF115	2901-000226	FILTER-EMI SMD;25V,0.3A,-,100pF,3.2x1.25	
...3	EF116	2901-000226	FILTER-EMI SMD;25V,0.3A,-,100pF,3.2x1.25	
⚠ ...3	IC101	AA13-00071A	IC-ASIC;-,SDC91,QFP,208P,CONV CONTROLL	
⚠ ...3	IC102	0801-001043	IC-CMOS LOGIC;74HC4046,PHASE-LOCKED-LOOP	
⚠ ...3	IC103	AA09-00032A	IC-MCU;TSC87251G2D-OTP,TSC87251G2D-OT	
⚠ ...3	IC104	1103-001167	IC-EEPROM;28C64,8KX8BIT,TSOP,28P,-,120NS	
⚠ ...3	IC105	1201-001520	IC-VIDEO AMP;2210,SOP,8P,150MIL,DUAL,7dB	
⚠ ...3	IC106	1201-001504	IC-OP AMP;072,SOP,8P,150MIL,DUAL,-,PLAST	
⚠ ...3	IC107	1201-001504	IC-OP AMP;072,SOP,8P,150MIL,DUAL,-,PLAST	
⚠ ...3	IC108	1201-001504	IC-OP AMP;072,SOP,8P,150MIL,DUAL,-,PLAST	
⚠ ...3	IC109	0801-001156	IC-CMOS LOGIC;74HC4066,BILATERAL SWITCH,	
⚠ ...3	IC110	0801-001156	IC-CMOS LOGIC;74HC4066,BILATERAL SWITCH,	
⚠ ...3	IC111	1001-000105	IC-ANALOG SWITCH;CD4066BM,BILATERAL CMOS	
⚠ ...3	IC112	1001-000105	IC-ANALOG SWITCH;CD4066BM,BILATERAL CMOS	
...3	PCB	AA41-00188D	PCB-CONVERGENCE MODULE;SVP-43J4M,FR-4,4L	S.N.A
...3	Q101	0501-000280	TR-SMALL SIGNAL;KSA1182,PNP,150mW,SOT-23	
...3	Q102	0501-000342	TR-SMALL SIGNAL;KSC1623-Y,NPN,200mW,SOT-	
...3	Q103	0501-000342	TR-SMALL SIGNAL;KSC1623-Y,NPN,200mW,SOT-	
...3	Q104	0501-000280	TR-SMALL SIGNAL;KSA1182,PNP,150mW,SOT-23	
...3	Q105	0501-000342	TR-SMALL SIGNAL;KSC1623-Y,NPN,200mW,SOT-	
...3	Q106	0501-000342	TR-SMALL SIGNAL;KSC1623-Y,NPN,200mW,SOT-	

Level	Loc. No.	Code No.	Description ; Specification	Remark
...3	Q107	0501-000342	TR-SMALL SIGNAL;KSC1623-Y,NPN,200mW,SOT-	
...3	Q108	0501-000280	TR-SMALL SIGNAL;KSA1182,PNP,150mW,SOT-23	
...3	Q109	0505-000257	FET-SILICON;2SK217,N,-,20mA,-,150mW,SOT-	S.N.A
...3	Q110	0505-000257	FET-SILICON;2SK217,N,-,20mA,-,150mW,SOT-	S.N.A
...3	Q111	0505-000257	FET-SILICON;2SK217,N,-,20mA,-,150mW,SOT-	S.N.A
...3	Q112	0505-000257	FET-SILICON;2SK217,N,-,20mA,-,150mW,SOT-	S.N.A
...3	Q113	0505-000257	FET-SILICON;2SK217,N,-,20mA,-,150mW,SOT-	S.N.A
...3	Q114	0505-000257	FET-SILICON;2SK217,N,-,20mA,-,150mW,SOT-	S.N.A
...3	R101	2007-000881	R-CHIP;4.7OHM,5%,1/10W,DA,TP,2012	
...3	R102	2007-000881	R-CHIP;4.7OHM,5%,1/10W,DA,TP,2012	
...3	R103	2007-000881	R-CHIP;4.7OHM,5%,1/10W,DA,TP,2012	
...3	R104	2007-000881	R-CHIP;4.7OHM,5%,1/10W,DA,TP,2012	
...3	R105	2007-000415	R-CHIP;15OHM,5%,1/10W,DA,TP,2012	
...3	R106	2007-000947	R-CHIP;47OHM,5%,1/10W,DA,TP,2012	
...3	R107	2007-000282	R-CHIP;100KOHM,5%,1/10W,DA,TP,2012	
...3	R108	2007-000872	R-CHIP;4.7KOHM,5%,1/10W,DA,TP,2012	
...3	R109	2007-000493	R-CHIP;2.2KOHM,5%,1/10W,DA,TP,2012	
...3	R110	2007-000221	R-CHIP;1.2KOHM,5%,1/10W,DA,TP,2012	
...3	R111	2007-000380	R-CHIP;13KOHM,5%,1/10W,DA,TP,2012	
...3	R112	2007-000468	R-CHIP;1KOHM,5%,1/10W,DA,TP,2012	
...3	R113	2007-001097	R-CHIP;62KOHM,5%,1/10W,DA,TP,2012	
...3	R114	2007-000468	R-CHIP;1KOHM,5%,1/10W,DA,TP,2012	
...3	R116	2007-000468	R-CHIP;1KOHM,5%,1/10W,DA,TP,2012	
...3	R117	2007-000468	R-CHIP;1KOHM,5%,1/10W,DA,TP,2012	
...3	R118	2007-000468	R-CHIP;1KOHM,5%,1/10W,DA,TP,2012	
...3	R119	2007-000468	R-CHIP;1KOHM,5%,1/10W,DA,TP,2012	
...3	R120	2007-000401	R-CHIP;150OHM,5%,1/10W,DA,TP,2012	
...3	R121	2007-000023	R-CHIP;120OHM,5%,1/10W,DA,TP,2012	
...3	R122	2007-000468	R-CHIP;1KOHM,5%,1/10W,DA,TP,2012	
...3	R123	2007-000401	R-CHIP;150OHM,5%,1/10W,DA,TP,2012	
...3	R124	2007-000468	R-CHIP;1KOHM,5%,1/10W,DA,TP,2012	
...3	R125	2007-000401	R-CHIP;150OHM,5%,1/10W,DA,TP,2012	
...3	R126	2007-000401	R-CHIP;150OHM,5%,1/10W,DA,TP,2012	
...3	R127	2007-000401	R-CHIP;150OHM,5%,1/10W,DA,TP,2012	
...3	R128	2007-000290	R-CHIP;100OHM,5%,1/10W,DA,TP,2012	
...3	R129	2007-000465	R-CHIP;1KOHM,1%,1/10W,DA,TP,2012	
...3	R130	2007-000868	R-CHIP;4.7KOHM,1%,1/10W,DA,TP,2012	
...3	R131	2007-000981	R-CHIP;5.6KOHM,5%,1/10W,DA,TP,2012	
...3	R132	2007-000465	R-CHIP;1KOHM,1%,1/10W,DA,TP,2012	
...3	R133	2007-000868	R-CHIP;4.7KOHM,1%,1/10W,DA,TP,2012	
...3	R134	2007-000981	R-CHIP;5.6KOHM,5%,1/10W,DA,TP,2012	
...3	R135	2007-000290	R-CHIP;100OHM,5%,1/10W,DA,TP,2012	
...3	R136	2007-000290	R-CHIP;100OHM,5%,1/10W,DA,TP,2012	
...3	R137	2007-000465	R-CHIP;1KOHM,1%,1/10W,DA,TP,2012	
...3	R138	2007-000868	R-CHIP;4.7KOHM,1%,1/10W,DA,TP,2012	
...3	R139	2007-000981	R-CHIP;5.6KOHM,5%,1/10W,DA,TP,2012	
...3	R140	2007-000465	R-CHIP;1KOHM,1%,1/10W,DA,TP,2012	
...3	R141	2007-000868	R-CHIP;4.7KOHM,1%,1/10W,DA,TP,2012	
...3	R142	2007-000981	R-CHIP;5.6KOHM,5%,1/10W,DA,TP,2012	
...3	R143	2007-000290	R-CHIP;100OHM,5%,1/10W,DA,TP,2012	
...3	R144	2007-000290	R-CHIP;100OHM,5%,1/10W,DA,TP,2012	
...3	R145	2007-000465	R-CHIP;1KOHM,1%,1/10W,DA,TP,2012	
...3	R146	2007-000868	R-CHIP;4.7KOHM,1%,1/10W,DA,TP,2012	
...3	R147	2007-000981	R-CHIP;5.6KOHM,5%,1/10W,DA,TP,2012	
...3	R148	2007-000465	R-CHIP;1KOHM,1%,1/10W,DA,TP,2012	
...3	R149	2007-000868	R-CHIP;4.7KOHM,1%,1/10W,DA,TP,2012	
...3	R150	2007-000981	R-CHIP;5.6KOHM,5%,1/10W,DA,TP,2012	
...3	R151	2007-000290	R-CHIP;100OHM,5%,1/10W,DA,TP,2012	
...3	R152	2007-000282	R-CHIP;100KOHM,5%,1/10W,DA,TP,2012	
...3	R153	2007-000872	R-CHIP;4.7KOHM,5%,1/10W,DA,TP,2012	
...3	R154	2007-000774	R-CHIP;33KOHM,5%,1/10W,DA,TP,2012	
...3	R155	2007-000300	R-CHIP;10KOHM,5%,1/10W,DA,TP,2012	
...3	R156	2007-001055	R-CHIP;6.2KOHM,5%,1/10W,DA,TP,2012	
...3	R157	2007-000671	R-CHIP;2KOHM,5%,1/10W,DA,TP,2012	
...3	R158	2007-000468	R-CHIP;1KOHM,5%,1/10W,DA,TP,2012	
...3	R159	2007-001166	R-CHIP;75OHM,5%,1/10W,DA,TP,2012	
...3	R160	2007-000766	R-CHIP;330OHM,5%,1/10W,DA,TP,2012	
...3	R161	2007-000290	R-CHIP;100OHM,5%,1/10W,DA,TP,2012	
...3	R162	2007-000290	R-CHIP;100OHM,5%,1/10W,DA,TP,2012	
...3	R163	2007-000290	R-CHIP;100OHM,5%,1/10W,DA,TP,2012	
...3	R164	2007-000468	R-CHIP;1KOHM,5%,1/10W,DA,TP,2012	
...3	R165	2007-000468	R-CHIP;1KOHM,5%,1/10W,DA,TP,2012	
...3	R166	2007-000468	R-CHIP;1KOHM,5%,1/10W,DA,TP,2012	
...3	R167	2007-000468	R-CHIP;1KOHM,5%,1/10W,DA,TP,2012	
...3	R168	2007-000468	R-CHIP;1KOHM,5%,1/10W,DA,TP,2012	
...3	R169	2007-000703	R-CHIP;3.6KOHM,5%,1/10W,DA,TP,2012	

Level	Loc. No.	Code No.	Description ; Specification	Remark
...3	R170	2007-000468	R-CHIP;1KOHM,5%,1/10W,DA,TP,2012	
...3	R171	2007-000221	R-CHIP;1.2KOHM,5%,1/10W,DA,TP,2012	
...3	R172	2007-000642	R-CHIP;270OHM,5%,1/10W,DA,TP,2012	
...3	R173	2007-000030	R-CHIP;560OHM,5%,1/10W,DA,TP,2012	
...3	R174	2007-000030	R-CHIP;560OHM,5%,1/10W,DA,TP,2012	
...3	R175	2007-000282	R-CHIP;100KOHM,5%,1/10W,DA,TP,2012	
...3	R176	2007-000872	R-CHIP;4.7KOHM,5%,1/10W,DA,TP,2012	
...3	R177	2007-000872	R-CHIP;4.7KOHM,5%,1/10W,DA,TP,2012	
...3	R178	2007-000728	R-CHIP;300OHM,5%,1/10W,DA,TP,2012	
...3	R179	2007-000728	R-CHIP;300OHM,5%,1/10W,DA,TP,2012	
...3	R180	2007-000728	R-CHIP;300OHM,5%,1/10W,DA,TP,2012	
...3	R181	2007-000728	R-CHIP;300OHM,5%,1/10W,DA,TP,2012	
...3	R182	2007-000728	R-CHIP;300OHM,5%,1/10W,DA,TP,2012	
...3	R183	2007-000728	R-CHIP;300OHM,5%,1/10W,DA,TP,2012	
...3	R184	2007-000830	R-CHIP;39KOHM,5%,1/10W,DA,TP,2012	
...3	R201	2007-000029	R-CHIP;0OHM,5%,1/10W,DA,TP,2012	
...3	R203	2007-000565	R-CHIP;220KOHM,5%,1/10W,DA,TP,2012	
...3	R204	2007-000565	R-CHIP;220KOHM,5%,1/10W,DA,TP,2012	
...3	R205	2007-000565	R-CHIP;220KOHM,5%,1/10W,DA,TP,2012	
...3	R206	2007-000565	R-CHIP;220KOHM,5%,1/10W,DA,TP,2012	
...3	R207	2007-000565	R-CHIP;220KOHM,5%,1/10W,DA,TP,2012	
...3	R208	2007-000565	R-CHIP;220KOHM,5%,1/10W,DA,TP,2012	
...3	X101	2801-003860	CRYSTAL-SMD;24MHz,30ppm,28-ABV,20pF,50oh	

ASSY-PCB,TERMINAL

1	*	AA95-00219E	ASSY-PCB,TERMINAL;-,SP43J5HF,J51A,-,-,2	
..2	CNT01	3711-003630	CONNECTOR-HEADER;BOX,32P,2R,2.54mm,ANGLE	
..2	CNT02	3711-003630	CONNECTOR-HEADER;BOX,32P,2R,2.54mm,ANGLE	
..2	CNT03	3711-003601	CONNECTOR-HEADER;BOX,12P,1R,2.5mm,ANGLE,	
⚠ ..2	IC703	0904-001121	IC-I/O SUPPORT CHIP;8574,8BIT,DIP,16P,30	
⚠ ..2	IC704	1001-001022	IC-ANALOG SWITCH;TDA8601,BLANKING,DIP,16	
⚠ ..2	IC705	0801-000213	IC-CMOS LOGIC;4052,MULTIPLEXER,DIP,16P,3	
..2	JKV01	3722-000498	JACK-SCART;21P,-,SN,BLK,NO	
..2	JKV02	3722-001486	JACK-RCA;3P/9P,3.5mm,NI,BLK,-	
..2	JKV03	3722-001382	JACK-RCA;5P(9P),3.4MM,NI,R/W/G/BLUE,-	
..2	JKV04	3722-001350	JACK-RCA;7P/9P,3.4MM,NI,BLK,-	
..2	JKV05	3701-001013	CONNECTOR-DSUB;15P,3R,FEMALE,STRAIGHT,AU	
..2	JKV06	3701-001013	CONNECTOR-DSUB;15P,3R,FEMALE,STRAIGHT,AU	
..2	JKV07	3722-000544	JACK-VHS;4P,11.5mm,AG,BLK,N	
..2	JKV08	3722-000498	JACK-SCART;21P,-,SN,BLK,NO	
..2	RN701	2011-000160	R-NETWORK;10Kohm,5%,1/8W,A,SIP,9P,TP	
..2		AA99-20082V	ASSY-PCB SUB,AUTO; AA95-00219E ,V	S.N.A
...3	C701	2401-002009	C-AL;100uF,20%,16V,GP,TP,6.3x7,5	
...3	C702	2203-000218	C-CERAMIC,CHIP;100nF,20%,50V,Y5V,TP,2012	
...3	C703	2401-002009	C-AL;100uF,20%,16V,GP,TP,6.3x7,5	
...3	C704	2203-000818	C-CERAMIC,CHIP;0.033nF,5%,50V,NP0,TP,201	
...3	C705	2203-000818	C-CERAMIC,CHIP;0.033nF,5%,50V,NP0,TP,201	
...3	C706	2203-000979	C-CERAMIC,CHIP;47nF,10%,50V,X7R,TP,2012	
...3	C707	2203-000979	C-CERAMIC,CHIP;47nF,10%,50V,X7R,TP,2012	
...3	C708	2203-000979	C-CERAMIC,CHIP;47nF,10%,50V,X7R,TP,2012	
...3	C709	2203-000979	C-CERAMIC,CHIP;47nF,10%,50V,X7R,TP,2012	
...3	C710	2203-000979	C-CERAMIC,CHIP;47nF,10%,50V,X7R,TP,2012	
...3	C711	2203-000979	C-CERAMIC,CHIP;47nF,10%,50V,X7R,TP,2012	
...3	C712	2203-000218	C-CERAMIC,CHIP;100nF,20%,50V,Y5V,TP,2012	
...3	C713	2203-000979	C-CERAMIC,CHIP;47nF,10%,50V,X7R,TP,2012	
...3	C714	2203-000979	C-CERAMIC,CHIP;47nF,10%,50V,X7R,TP,2012	
...3	C715	2203-000979	C-CERAMIC,CHIP;47nF,10%,50V,X7R,TP,2012	
...3	C716	2401-002009	C-AL;100uF,20%,16V,GP,TP,6.3x7,5	
...3	C717	2203-000218	C-CERAMIC,CHIP;100nF,20%,50V,Y5V,TP,2012	
...3	C718	2203-000979	C-CERAMIC,CHIP;47nF,10%,50V,X7R,TP,2012	
...3	C719	2203-000979	C-CERAMIC,CHIP;47nF,10%,50V,X7R,TP,2012	
...3	C720	2203-000979	C-CERAMIC,CHIP;47nF,10%,50V,X7R,TP,2012	
...3	C721	2203-000979	C-CERAMIC,CHIP;47nF,10%,50V,X7R,TP,2012	
...3	C722	2203-000979	C-CERAMIC,CHIP;47nF,10%,50V,X7R,TP,2012	
...3	C723	2203-000218	C-CERAMIC,CHIP;100nF,20%,50V,Y5V,TP,2012	
...3	C724	2203-000979	C-CERAMIC,CHIP;47nF,10%,50V,X7R,TP,2012	
...3	C725	2203-000218	C-CERAMIC,CHIP;100nF,20%,50V,Y5V,TP,2012	
...3	C726	2203-000218	C-CERAMIC,CHIP;100nF,20%,50V,Y5V,TP,2012	
...3	C727	2203-000979	C-CERAMIC,CHIP;47nF,10%,50V,X7R,TP,2012	
...3	C730	2401-002299	C-AL;4.7uF,20%,50V,GP,TP,5x7,5	
...3	C731	2401-002299	C-AL;4.7uF,20%,50V,GP,TP,5x7,5	
...3	C732	2203-000444	C-CERAMIC,CHIP;1nF,10%,50V,X7R,TP,2012,-	
...3	C733	2203-000444	C-CERAMIC,CHIP;1nF,10%,50V,X7R,TP,2012,-	

Level	Loc. No.	Code No.	Description ; Specification	Remark
...3	C734	2203-000444	C-CERAMIC,CHIP;1nF,10%,50V,X7R,TP,2012,-	
...3	C735	2203-000444	C-CERAMIC,CHIP;1nF,10%,50V,X7R,TP,2012,-	
...3	C736	2203-000444	C-CERAMIC,CHIP;1nF,10%,50V,X7R,TP,2012,-	
...3	C737	2203-000444	C-CERAMIC,CHIP;1nF,10%,50V,X7R,TP,2012,-	
...3	C740	2401-001840	C-AL;100uF,20%,16V,GP,TP,6.3x11,5	
...3	C741	2203-000218	C-CERAMIC,CHIP;100nF,20%,50V,Y5V,TP,2012	
...3	C742	2401-001840	C-AL;100uF,20%,16V,GP,TP,6.3x11,5	
...3	C743	2203-000218	C-CERAMIC,CHIP;100nF,20%,50V,Y5V,TP,2012	
...3	C744	2203-000575	C-CERAMIC,CHIP;220NF,10%,25V,X7R,TP,2012	
...3	C745	2203-000575	C-CERAMIC,CHIP;220NF,10%,25V,X7R,TP,2012	
...3	C746	2203-000575	C-CERAMIC,CHIP;220NF,10%,25V,X7R,TP,2012	
...3	C747	2203-000575	C-CERAMIC,CHIP;220NF,10%,25V,X7R,TP,2012	
...3	C748	2203-000575	C-CERAMIC,CHIP;220NF,10%,25V,X7R,TP,2012	
...3	C749	2203-000575	C-CERAMIC,CHIP;220NF,10%,25V,X7R,TP,2012	
...3	C760	2401-000667	C-AL;2.2uF,20%,50V,WT,TP,5x11,5	
...3	C761	2401-000667	C-AL;2.2uF,20%,50V,WT,TP,5x11,5	
...3	C762	2401-000667	C-AL;2.2uF,20%,50V,WT,TP,5x11,5	
...3	C763	2401-000667	C-AL;2.2uF,20%,50V,WT,TP,5x11,5	
...3	C764	2401-000667	C-AL;2.2uF,20%,50V,WT,TP,5x11,5	
...3	C765	2401-000667	C-AL;2.2uF,20%,50V,WT,TP,5x11,5	
...3	C766	2401-000667	C-AL;2.2uF,20%,50V,WT,TP,5x11,5	
...3	C767	2401-000667	C-AL;2.2uF,20%,50V,WT,TP,5x11,5	
...3	C768	2203-000979	C-CERAMIC,CHIP;47nF,10%,50V,X7R,TP,2012	
...3	C769	2203-000979	C-CERAMIC,CHIP;47nF,10%,50V,X7R,TP,2012	
...3	C770	2203-000683	C-CERAMIC,CHIP;0.027nF,5%,50V,NP0,TP,201	
...3	C771	2203-000683	C-CERAMIC,CHIP;0.027nF,5%,50V,NP0,TP,201	
...3	C772	2203-000683	C-CERAMIC,CHIP;0.027nF,5%,50V,NP0,TP,201	
...3	C773	2203-000239	C-CERAMIC,CHIP;0.1nF,5%,50V,NP0,TP,2012	
...3	C774	2203-000239	C-CERAMIC,CHIP;0.1nF,5%,50V,NP0,TP,2012	
...3	C775	2203-000444	C-CERAMIC,CHIP;1nF,10%,50V,X7R,TP,2012,-	
...3	C776	2203-000444	C-CERAMIC,CHIP;1nF,10%,50V,X7R,TP,2012,-	
...3	C777	2401-001496	C-AL;47uF,20%,16V,GP,TP,5x7,5	
...3	C780	2401-000360	C-AL;100uF,20%,50V,GP,TP,8x11.5,5	
...3	C782	2401-000471	C-AL;10uF,20%,50V,BP,TP,5x11,5mm	
...3	C783	2401-000471	C-AL;10uF,20%,50V,BP,TP,5x11,5mm	
...3	DZ701	0403-000314	DIODE-ZENER;RLZJ9.1B,9.1V,8.80-9.30V,400	
...3	DZ702	0403-000314	DIODE-ZENER;RLZJ9.1B,9.1V,8.80-9.30V,400	
...3	DZ703	0403-000314	DIODE-ZENER;RLZJ9.1B,9.1V,8.80-9.30V,400	
...3	DZ704	0403-001117	DIODE-ZENER;RLZ12B,5%,500mW,LL-34,TP	
...3	DZ705	0403-000620	DIODE-ZENER;RLZ5.6B,5.6V,5.45-5.73V,400m	
⚠ ...3	IC701	1001-001030	IC-VIDEO SWITCH;TDA6920X,-,SOP,28P,300MI	
⚠ ...3	IC702	1001-001030	IC-VIDEO SWITCH;TDA6920X,-,SOP,28P,300MI	
...3	J701	2007-000029	R-CHIP;0OHM,5%,1/10W,DA,TP,2012	
...3	J702	2007-000029	R-CHIP;0OHM,5%,1/10W,DA,TP,2012	
...3	L701	2702-001094	INDUCTOR-RADIAL;10uH,10%,6x4mm	
...3	L702	2702-001094	INDUCTOR-RADIAL;10uH,10%,6x4mm	
...3	L703	2702-001094	INDUCTOR-RADIAL;10uH,10%,6x4mm	
...3	L704	2702-001094	INDUCTOR-RADIAL;10uH,10%,6x4mm	
...3	L705	2702-001094	INDUCTOR-RADIAL;10uH,10%,6x4mm	
...3	L706	2702-001094	INDUCTOR-RADIAL;10uH,10%,6x4mm	
...3	L707	2702-001094	INDUCTOR-RADIAL;10uH,10%,6x4mm	
...3	L708	2702-001094	INDUCTOR-RADIAL;10uH,10%,6x4mm	
...3	L709	2702-001094	INDUCTOR-RADIAL;10uH,10%,6x4mm	
...3	L710	2702-001094	INDUCTOR-RADIAL;10uH,10%,6x4mm	
...3	L719	2702-001094	INDUCTOR-RADIAL;10uH,10%,6x4mm	
...3	L720	2702-001094	INDUCTOR-RADIAL;10uH,10%,6x4mm	
...3	L721	2702-001094	INDUCTOR-RADIAL;10uH,10%,6x4mm	
...3	L722	2702-001094	INDUCTOR-RADIAL;10uH,10%,6x4mm	
...3	L723	2702-001094	INDUCTOR-RADIAL;10uH,10%,6x4mm	
...3	L724	2702-001094	INDUCTOR-RADIAL;10uH,10%,6x4mm	
...3	L725	2702-001094	INDUCTOR-RADIAL;10uH,10%,6x4mm	
...3	L726	2702-001094	INDUCTOR-RADIAL;10uH,10%,6x4mm	
...3	PCB	AA41-00076B	PCB-AV TERMINAL;SP43J5HF,FR-4,2L,B,1.6T,	S.N.A
...3	Q701	0501-000727	TR-SMALL SIGNAL;BC848C,NPN,310mW,SOT-23,	
...3	Q702	0501-000727	TR-SMALL SIGNAL;BC848C,NPN,310mW,SOT-23,	
...3	Q703	0501-000727	TR-SMALL SIGNAL;BC848C,NPN,310mW,SOT-23,	
...3	Q704	0501-000727	TR-SMALL SIGNAL;BC848C,NPN,310mW,SOT-23,	
...3	Q705	0501-000727	TR-SMALL SIGNAL;BC848C,NPN,310mW,SOT-23,	
...3	Q706	0501-000727	TR-SMALL SIGNAL;BC848C,NPN,310mW,SOT-23,	
...3	Q707	0501-000727	TR-SMALL SIGNAL;BC848C,NPN,310mW,SOT-23,	
...3	Q708	0501-000727	TR-SMALL SIGNAL;BC848C,NPN,310mW,SOT-23,	
...3	Q709	0501-000727	TR-SMALL SIGNAL;BC848C,NPN,310mW,SOT-23,	
...3	Q710	0501-000727	TR-SMALL SIGNAL;BC848C,NPN,310mW,SOT-23,	
...3	Q711	0501-000727	TR-SMALL SIGNAL;BC848C,NPN,310mW,SOT-23,	
...3	Q712	0501-000727	TR-SMALL SIGNAL;BC848C,NPN,310mW,SOT-23,	
...3	Q713	0501-000727	TR-SMALL SIGNAL;BC848C,NPN,310mW,SOT-23,	
...3	R701	2007-000290	R-CHIP;100OHM,5%,1/10W,DA,TP,2012	

Level	Loc. No.	Code No.	Description ; Specification	Remark
...3	R702	2007-000300	R-CHIP;10KOHM,5%,1/10W,DA,TP,2012	
...3	R703	2007-000468	R-CHIP;1KOHM,5%,1/10W,DA,TP,2012	
...3	R704	2007-000511	R-CHIP;2.4KOHM,5%,1/10W,DA,TP,2012	
...3	R705	2007-001166	R-CHIP;75OHM,5%,1/10W,DA,TP,2012	
...3	R706	2007-001166	R-CHIP;75OHM,5%,1/10W,DA,TP,2012	
...3	R708	2007-000290	R-CHIP;100OHM,5%,1/10W,DA,TP,2012	
...3	R709	2007-000290	R-CHIP;100OHM,5%,1/10W,DA,TP,2012	
...3	R710	2007-000290	R-CHIP;100OHM,5%,1/10W,DA,TP,2012	
...3	R711	2007-001166	R-CHIP;75OHM,5%,1/10W,DA,TP,2012	
...3	R712	2007-000290	R-CHIP;100OHM,5%,1/10W,DA,TP,2012	
...3	R713	2007-000290	R-CHIP;100OHM,5%,1/10W,DA,TP,2012	
...3	R714	2007-000290	R-CHIP;100OHM,5%,1/10W,DA,TP,2012	
...3	R715	2007-000290	R-CHIP;100OHM,5%,1/10W,DA,TP,2012	
...3	R716	2007-000300	R-CHIP;10KOHM,5%,1/10W,DA,TP,2012	
...3	R717	2007-000401	R-CHIP;150OHM,5%,1/10W,DA,TP,2012	
...3	R718	2007-000300	R-CHIP;10KOHM,5%,1/10W,DA,TP,2012	
...3	R719	2007-000468	R-CHIP;1KOHM,5%,1/10W,DA,TP,2012	
...3	R720	2007-000511	R-CHIP;2.4KOHM,5%,1/10W,DA,TP,2012	
...3	R721	2007-000290	R-CHIP;100OHM,5%,1/10W,DA,TP,2012	
...3	R722	2007-001166	R-CHIP;75OHM,5%,1/10W,DA,TP,2012	
...3	R723	2007-000290	R-CHIP;100OHM,5%,1/10W,DA,TP,2012	
...3	R724	2007-000290	R-CHIP;100OHM,5%,1/10W,DA,TP,2012	
...3	R725	2007-001166	R-CHIP;75OHM,5%,1/10W,DA,TP,2012	
...3	R726	2007-001166	R-CHIP;75OHM,5%,1/10W,DA,TP,2012	
...3	R727	2007-001166	R-CHIP;75OHM,5%,1/10W,DA,TP,2012	
...3	R728	2007-001166	R-CHIP;75OHM,5%,1/10W,DA,TP,2012	
...3	R729	2007-001166	R-CHIP;75OHM,5%,1/10W,DA,TP,2012	
...3	R730	2007-000282	R-CHIP;100KOHM,5%,1/10W,DA,TP,2012	
...3	R731	2007-000282	R-CHIP;100KOHM,5%,1/10W,DA,TP,2012	
...3	R732	2007-000282	R-CHIP;100KOHM,5%,1/10W,DA,TP,2012	
...3	R733	2007-000282	R-CHIP;100KOHM,5%,1/10W,DA,TP,2012	
...3	R734	2007-000941	R-CHIP;47KOHM,5%,1/10W,DA,TP,2012	
...3	R735	2007-000941	R-CHIP;47KOHM,5%,1/10W,DA,TP,2012	
...3	R736	2007-001166	R-CHIP;75OHM,5%,1/10W,DA,TP,2012	
...3	R737	2007-000766	R-CHIP;330OHM,5%,1/10W,DA,TP,2012	
...3	R740	2007-000468	R-CHIP;1KOHM,5%,1/10W,DA,TP,2012	
...3	R741	2007-000468	R-CHIP;1KOHM,5%,1/10W,DA,TP,2012	
...3	R742	2007-000468	R-CHIP;1KOHM,5%,1/10W,DA,TP,2012	
...3	R743	2007-000468	R-CHIP;1KOHM,5%,1/10W,DA,TP,2012	
...3	R744	2007-000468	R-CHIP;1KOHM,5%,1/10W,DA,TP,2012	
...3	R745	2007-000468	R-CHIP;1KOHM,5%,1/10W,DA,TP,2012	
...3	R746	2007-000468	R-CHIP;1KOHM,5%,1/10W,DA,TP,2012	
...3	R748	2007-000872	R-CHIP;4.7KOHM,5%,1/10W,DA,TP,2012	
...3	R749	2007-000029	R-CHIP;0OHM,5%,1/10W,DA,TP,2012	
...3	R750	2007-000572	R-CHIP;220OHM,5%,1/10W,DA,TP,2012	
...3	R751	2007-000029	R-CHIP;0OHM,5%,1/10W,DA,TP,2012	
...3	R752	2007-000572	R-CHIP;220OHM,5%,1/10W,DA,TP,2012	
...3	R753	2007-000029	R-CHIP;0OHM,5%,1/10W,DA,TP,2012	
...3	R754	2007-000572	R-CHIP;220OHM,5%,1/10W,DA,TP,2012	
...3	R755	2007-000029	R-CHIP;0OHM,5%,1/10W,DA,TP,2012	
...3	R756	2007-000964	R-CHIP;5.1KOHM,5%,1/10W,DA,TP,2012	
...3	R757	2007-000468	R-CHIP;1KOHM,5%,1/10W,DA,TP,2012	
...3	R758	2007-000872	R-CHIP;4.7KOHM,5%,1/10W,DA,TP,2012	
...3	R759	2007-000872	R-CHIP;4.7KOHM,5%,1/10W,DA,TP,2012	
...3	R760	2007-000290	R-CHIP;100OHM,5%,1/10W,DA,TP,2012	
...3	R761	2007-000221	R-CHIP;1.2KOHM,5%,1/10W,DA,TP,2012	
...3	R762	2007-000290	R-CHIP;100OHM,5%,1/10W,DA,TP,2012	
...3	R763	2007-000290	R-CHIP;100OHM,5%,1/10W,DA,TP,2012	
...3	R764	2007-000221	R-CHIP;1.2KOHM,5%,1/10W,DA,TP,2012	
...3	R765	2007-000290	R-CHIP;100OHM,5%,1/10W,DA,TP,2012	
...3	R766	2007-000290	R-CHIP;100OHM,5%,1/10W,DA,TP,2012	
...3	R767	2007-000290	R-CHIP;100OHM,5%,1/10W,DA,TP,2012	
...3	R768	2007-000290	R-CHIP;100OHM,5%,1/10W,DA,TP,2012	
...3	R769	2007-000290	R-CHIP;100OHM,5%,1/10W,DA,TP,2012	
...3	R770	2007-000766	R-CHIP;330OHM,5%,1/10W,DA,TP,2012	
...3	R771	2007-001166	R-CHIP;75OHM,5%,1/10W,DA,TP,2012	
...3	R772	2007-001166	R-CHIP;75OHM,5%,1/10W,DA,TP,2012	
...3	R773	2007-001166	R-CHIP;75OHM,5%,1/10W,DA,TP,2012	
...3	R774	2007-001166	R-CHIP;75OHM,5%,1/10W,DA,TP,2012	
...3	R775	2007-001166	R-CHIP;75OHM,5%,1/10W,DA,TP,2012	
...3	R776	2007-001166	R-CHIP;75OHM,5%,1/10W,DA,TP,2012	
...3	R777	2007-000781	R-CHIP;33OHM,5%,1/10W,DA,TP,2012	
...3	R778	2007-000781	R-CHIP;33OHM,5%,1/10W,DA,TP,2012	
...3	R779	2007-001100	R-CHIP;62OHM,5%,1/10W,DA,TP,2012	
...3	R780	2007-001100	R-CHIP;62OHM,5%,1/10W,DA,TP,2012	
...3	R781	2007-001100	R-CHIP;62OHM,5%,1/10W,DA,TP,2012	
...3	R782	2007-000300	R-CHIP;10KOHM,5%,1/10W,DA,TP,2012	

Level	Loc. No.	Code No.	Description ; Specification	Remark
...3	R783	2007-000300	R-CHIP;10KOHM,5%,1/10W,DA,TP,2012	
...3	R784	2007-000300	R-CHIP;10KOHM,5%,1/10W,DA,TP,2012	
...3	R785	2007-000872	R-CHIP;4.7KOHM,5%,1/10W,DA,TP,2012	
...3	R786	2007-000290	R-CHIP;100OHM,5%,1/10W,DA,TP,2012	
...3	R787	2007-000290	R-CHIP;100OHM,5%,1/10W,DA,TP,2012	
...3	R788	2007-000468	R-CHIP;1KOHM,5%,1/10W,DA,TP,2012	
...3	R791	2007-000290	R-CHIP;100OHM,5%,1/10W,DA,TP,2012	
...3	R792	2007-000290	R-CHIP;100OHM,5%,1/10W,DA,TP,2012	
...3	R793	2007-000290	R-CHIP;100OHM,5%,1/10W,DA,TP,2012	
...3	R794	2007-000290	R-CHIP;100OHM,5%,1/10W,DA,TP,2012	
...3	R795	2007-001155	R-CHIP;750OHM,5%,1/10W,DA,TP,2012	
...3	R796	2007-000282	R-CHIP;100KOHM,5%,1/10W,DA,TP,2012	
...3	R797	2007-001155	R-CHIP;750OHM,5%,1/10W,DA,TP,2012	
...3	R798	2007-000282	R-CHIP;100KOHM,5%,1/10W,DA,TP,2012	
...3	R799	2007-000468	R-CHIP;1KOHM,5%,1/10W,DA,TP,2012	
...3	R800	2007-001166	R-CHIP;75OHM,5%,1/10W,DA,TP,2012	
...3	R801	2007-001166	R-CHIP;75OHM,5%,1/10W,DA,TP,2012	
...3	R802	2007-001166	R-CHIP;75OHM,5%,1/10W,DA,TP,2012	
...3	R803	2007-000328	R-CHIP;11KOHM,5%,1/10W,DA,TP,2012	
...3	R804	2007-000328	R-CHIP;11KOHM,5%,1/10W,DA,TP,2012	
...3	R805	2007-000001	R-CHIP;68KOHM,5%,1/10W,DA,TP,2012	
...3	R806	2007-000001	R-CHIP;68KOHM,5%,1/10W,DA,TP,2012	
...3	R807	2007-000001	R-CHIP;68KOHM,5%,1/10W,DA,TP,2012	
...3	R808	2007-000001	R-CHIP;68KOHM,5%,1/10W,DA,TP,2012	
...3	R809	2007-000001	R-CHIP;68KOHM,5%,1/10W,DA,TP,2012	
...3	R810	2007-000001	R-CHIP;68KOHM,5%,1/10W,DA,TP,2012	
...3	R811	2007-000001	R-CHIP;68KOHM,5%,1/10W,DA,TP,2012	
...3	R812	2007-000001	R-CHIP;68KOHM,5%,1/10W,DA,TP,2012	
...3	R813	2007-000300	R-CHIP;10KOHM,5%,1/10W,DA,TP,2012	
...3	R814	2007-000300	R-CHIP;10KOHM,5%,1/10W,DA,TP,2012	
...3	R815	2007-000300	R-CHIP;10KOHM,5%,1/10W,DA,TP,2012	
...3	R816	2007-000774	R-CHIP;33KOHM,5%,1/10W,DA,TP,2012	
...3	R817	2007-000615	R-CHIP;24KOHM,5%,1/10W,DA,TP,2012	
...3	R818	2007-000774	R-CHIP;33KOHM,5%,1/10W,DA,TP,2012	
...3	R819	2007-000615	R-CHIP;24KOHM,5%,1/10W,DA,TP,2012	
..2		AA65-30105A	CLAMP-WIRE;NYLON 66,V2,NTR,15MM,ALL MODE	S.N.A
..2		0202-001004	SOLDER-CREAM;SQ-2030M SZH-1,S63A,D0.04,6	S.N.A
..2		0202-000187	SOLDER-WIRE FLUX;-,RS60S,D1.2,63Sn/37Pb	S.N.A

ASSY CABINET BOT

1	*	AA91-00232C	ASSY CABINET BOT;-,VO,JERSEY SP200G SAMS	
..2		AA60-00064A	SPACER-JERSEY;43J5,JERSEY,-,-,-,GRAY,-,-	S.N.A
..2		AA64-00673A	BADGE-BRAND;AL,SAMSUNG,-,L72,-,PJT,-	
..2		AA64-00283B	CABINET-BOTTOM;-,43J5,JERSEY SP-200G D/G	S.N.A
..2		AA61-20295A	HOLDER-PIN;-,SPT555JHD,ABS,HB,BLK,-	S.N.A

ASSY TERMINAL BOARD

1	*	AA91-00158W	ASSY TERMINAL BOARD;-,HIPS,VO,BLK,J51A T	
..2		AA63-00045B	TERMINAL-BOARD,ANT;-,HIPS,-,PCJ533R,-	S.N.A
..2		AA64-00182U	INLAY BACK;SP53J5HF,J51A TURKEY,PS SHEET	S.N.A

ASSY CABINET

1	*	AA90-00185V	ASSY CABINET;43J5,SP43J5HFX/SED	S.N.A
..2	AC+BCM	AA60-10011A	SCREW-TAPTITE;HH,+,PC,M4,L12,ZPC(BLK),SW	S.N.A
..2	BCM+CM	6006-001090	SCREW-ASS'Y TAPP;WW,HEX,+,M6,L28.0,ZPC(Y	S.N.A
..2	BM+CBT	6003-001026	SCREW-TAPTITE;RH,+,B,M4,L15,ZPC(BLK),SWR	S.N.A
..2	CBT+CM	6005-001003	SCREW-WOOD;HH,+,M4,L20,ZPC(BLK),SWRCH18A	S.N.A
..2	CBW+CM	6005-001003	SCREW-WOOD;HH,+,M4,L20,ZPC(BLK),SWRCH18A	S.N.A
..2	CBW+HC	6005-001003	SCREW-WOOD;HH,+,M4,L20,ZPC(BLK),SWRCH18A	S.N.A
..2	CBW+TB	AA60-10011A	SCREW-TAPTITE;HH,+,PC,M4,L12,ZPC(BLK),SW	S.N.A
..2	CW+CM	6005-001003	SCREW-WOOD;HH,+,M4,L20,ZPC(BLK),SWRCH18A	S.N.A
..2	DB+CM	6005-001003	SCREW-WOOD;HH,+,M4,L20,ZPC(BLK),SWRCH18A	S.N.A
..2	FOC+CM	6003-001023	SCREW-TAPTITE;RWH,+,B,M3,L10,ZPC(YEL),SW	S.N.A
..2	HC+CM	6005-001003	SCREW-WOOD;HH,+,M4,L20,ZPC(BLK),SWRCH18A	S.N.A
..2	HS+CM	AA60-00021A	SCREW-WOOD;RH,+,M3.5,L22,ZPC(BLK),SWRCH1	S.N.A
..2	HV+BCM	AA60-10011A	SCREW-TAPTITE;HH,+,PC,M4,L12,ZPC(BLK),SW	S.N.A
..2		AA26-30006E	TRANS-FLYBACK;-,FWZ-50A001B(S),50KV,-	
..2		AA67-20025A	MIRROR-BACK SURFACE;43',GLASS,3.0,-,BSM,	
..2		AA67-00030A	SUN-SCREEN;-,43NEW,H/C,A/S,PMMA,T=93%,T2	
..2		AA67-00028A	SCREEN-TINT;-,43NEW,-,PMMA,TINT=10%,T3.0	
..2		AA65-30008A	CLAMP-CORD;PE,HB,BLK,-,-,-	S.N.A
..2		AA91-00241A	ASSY-BRACKET,MAIN;-,-,SECC T1.6 7,53J5	
...3	BMSBMM	AA60-10011A	SCREW-TAPTITE;HH,+,PC,M4,L12,ZPC(BLK),SW	S.N.A
...3		AA61-00152B	BRACKET-MAIN,M;-,7 PROJECTION,SECC,-,-,	
...3		AA61-00153B	BRACKET-MAIN,S;-,7 PROJECTION,SECC,-,-,	
..2		AA64-60449B	INLAY-COVER;SP-434JMF,PS,T0.5,149.3X69.5	
..2		AA61-20285A	HOLDER-BOX;-,3456,PP,VO,WHT,-	S.N.A
..2		AA61-11008A	BRACKET-MIRROR,S;-,SPT431J,SECC,T1.0,-,-	S.N.A
..2		AA61-11007B	BRACKET-MIRROR;-,SVP-434JA,SECC,T1.0,BLK	
..2		AA61-10361A	BRACKET-MIRROR;-,S5288,SECC-1,T1.0,-,-,-	S.N.A
..2		AA61-00185J	HOLDER-SCREEN,15T;-,43J5,ABS,HB,BLK,-	
..2		AA60-00036B	SPACER-COVER,DUST;SPONGE,T2,-,690X400,PJ	
..2		AA63-00021E	SPACER-MIRROR;PVC,-,BLK,L870,SP-434JMF,-	
..2		AA64-30433A	CABINET-BACK,T;-,S4388,-,HIPS,HB,BLK,-,-	
..2		AA64-00626C	CABINET-BACK,BOARD;-,53J5,-,HIPS,V0,BLK,	
..2		AA64-00579B	CABINET-FRONT,WOOD;-,43J5,-,MDF,-,-,T3,-	
..2		AA63-60002W	SPACER-FELT;FELT,T0.5,BLK,30X10,-,-	S.N.A
..2		AA63-10007C	BAND-PP;-,-,-,W18,-,CLEAR,1G,-	S.N.A
..2		AA63-00021G	SPACER-MIRROR;PVC,-,BLK,L420,524J,434J,-	
..2		AA63-00021F	SPACER-MIRROR;PVC,-,BLK,L612,SP-434JMF,-	

ASSY CHASSIS PART

1	*	AA90-00103E	ASSY CHASSIS PART;J51A FES,43J5	S.N.A
..2	CON+HC	6003-001023	SCREW-TAPTITE;RWH,+,B,M3,L10,ZPC(YEL),SW	S.N.A
..2	DF+FBT	6003-001023	SCREW-TAPTITE;RWH,+,B,M3,L10,ZPC(YEL),SW	S.N.A
..2	DF+HC	6003-001023	SCREW-TAPTITE;RWH,+,B,M3,L10,ZPC(YEL),SW	S.N.A
..2	PM+HC	6003-001023	SCREW-TAPTITE;RWH,+,B,M3,L10,ZPC(YEL),SW	S.N.A
..2	TBA+AV	6003-001026	SCREW-TAPTITE;RH,+,B,M4,L15,ZPC(BLK),SWR	S.N.A
..2	TBA+HC	6003-001023	SCREW-TAPTITE;RWH,+,B,M3,L10,ZPC(YEL),SW	S.N.A
..2	TBA+SC	6003-001026	SCREW-TAPTITE;RH,+,B,M4,L15,ZPC(BLK),SWR	S.N.A
..2		AA60-10011A	SCREW-TAPTITE;HH,+,PC,M4,L12,ZPC(BLK),SW	S.N.A
..2		AA61-00051B	HOLDER-CHASSIS;-,PCJ533R,ABS,VO,GRAY,E-2	S.N.A

ASSY-CRT-(B)

1	*	AA94-00996A	ASSY-CRT-(B);P16LFM00BMB(U),+380MG,7,BA	
..2		AA61-00057C	HOLDER-CAP;-,7 PROJECTION,PC,-,CLEAR,-	S.N.A
..2		AA39-00018A	LEAD CONNECTOR-ASSY;-,YFH800-01,YRH187RH	S.N.A
..2		AA67-10037A	LENS;43INCH,SSM-75RS-43,-,SEKINOS,C	
..2		AA67-10036A	LENS-ASSY;43INCH,SSM-75RS-43,-,SEKINOS,C	
..2		AA64-00208B	CASE-COUPLER,B;-,PROJECTION,7,ALDC,-,BL	S.N.A
..2		AA91-00103C	ASSY-WIRE,CRT;-,-,7CRT,PROJECTION	S.N.A
...3		AA61-00053B	BRACKET-WIRE;-,PROJECTION,SECC-1,T1.6,-,	S.N.A
...3		AA61-00054B	BRACKET-EARTH;-,PROJECTION,PBS,-,-,-,-	S.N.A
...3		AA61-00055C	BRACKET-CRT,WIRE;-,PJT,SUS304 1/8H,-,-,-	S.N.A
..2		AA26-30006F	TRANS-FLYBACK;-,FWZ-50A001C,55,30KV	
..2		AA63-00061B	SPACER-CAP;EPDM,-,BLK,-,PROJECTION,-	
..2		AA63-00091C	SPACER-CLENS;SILICON,-,GRAY,-,PROJECTION	S.N.A
..2		AA63-00060C	SPACER-CRT;SILICON,-,GRAY,7,PROJECTION,	S.N.A
..2		AA63-60025A	SPACER-DY;NEOPRENE,-,BLK,V0,S4388,-	S.N.A
..2		AA27-50005C	DEFLECTION-YOKE;-,DPD-4392AL,43'/PJTCRT,	
..2		AA03-10021N	CRT-MONO;-,P16LFM00BMB(U),-,7,90deg,90	
..2		AA27-60003C	MAGNET-CONVERGENCE;-,JH92LTU-SC-20,29.1m	
..2		AA63-10002A	BAND-TIE;-,NYLON66 V2,-,-,L100,NTR,-,-	S.N.A
..2		AA63-00099A	SPACER-FELT;PJT,-,BLK,-,30X30	S.N.A
..2		AA63-00076A	SPACER-LENS;FELT ,T1.0,BROWN,7CRT,PROJE	S.N.A
..2		AA61-00056B	BRACKET-LENS;-,PROJECTION,SECC,T1.6,-,-,	S.N.A
..2		AA60-10011A	SCREW-TAPTITE;HH,+,PC,M4,L12,ZPC(BLK),SW	S.N.A

Level	Loc. No.	Code No.	Description ; Specification	Remark

ASSY-CRT-(G)

1	*	AA94-00995A	ASSY-CRT-(G);P16LFM00HLA(AU),+380MG,7,B	
..2		AA61-00057C	HOLDER-CAP;-,7 PROJECTION,PC,-,CLEAR,-	S.N.A
..2		AA39-00018A	LEAD CONNECTOR-ASSY;-,YFH800-01,YRH187RH	S.N.A
..2		AA67-10039A	LENS;-,SSM-75RS-43,-,GRN C-ELEMENT	
..2		AA67-10036A	LENS-ASSY;43INCH,SSM-75RS-43,-,SEKINOS,C	
..2		AA64-00207B	CASE-COUPLER,G;-,PROJECTION,7,ALDC8,-,B	S.N.A
..2		AA91-00103C	ASSY-WIRE,CRT;-,-,7CRT,PROJECTION	S.N.A
...3		AA61-00053B	BRACKET-WIRE;-,PROJECTION,SECC-1,T1.6,-,	S.N.A
...3		AA61-00054B	BRACKET-EARTH;-,PROJECTION,PBS,-,-,-,-	S.N.A
...3		AA61-00055C	BRACKET-CRT,WIRE;-,PJT,SUS304 1/8H,-,-,-	S.N.A
..2		AA26-30006F	TRANS-FLYBACK;-,FWZ-50A001C,55,30KV	
..2		AA63-00061B	SPACER-CAP;EPDM,-,BLK,-,PROJECTION,-	
..2		AA63-00060C	SPACER-CRT;SILICON,-,GRAY,7,PROJECTION,	S.N.A
..2		AA63-00091C	SPACER-CLENS;SILICON,-,GRAY,-,PROJECTION	S.N.A
..2		AA63-60025A	SPACER-DY;NEOPRENE,-,BLK,V0,S4388,-	S.N.A
⚠ ..2		AA27-50005C	DEFLECTION-YOKE;-,DPD-4392AL,43'/PJTCRT,	
⚠ ..2		AA03-10021L	CRT-MONO;P16LFM00HHA(MU),-,7 inch,-,-,-	
..2		AA27-00003B	MAGNET-CONVERGENCE;-,JH92LT-029,29.1MM	
..2		AA63-10002A	BAND-TIE;-,NYLON66 V2,-,-,L100,NTR,-,-	S.N.A
..2		AA63-00099A	SPACER-FELT;PJT,-,BLK,-,30X30	S.N.A
..2		AA63-00076A	SPACER-LENS;FELT ,T1.0,BROWN,7CRT,PROJE	S.N.A
..2		AA61-00056B	BRACKET-LENS;-,PROJECTION,SECC,T1.6,-,-,	S.N.A
..2		AA60-10011A	SCREW-TAPTITE;HH,+,PC,M4,L12,ZPC(BLK),SW	S.N.A

ASSY-CRT-(R)

1	*	AA94-00994A	ASSY-CRT-(R);P16LFM00RFA(AU),+380MG,7,B	
..2		AA61-00057C	HOLDER-CAP;-,7 PROJECTION,PC,-,CLEAR,-	S.N.A
..2		AA39-00018A	LEAD CONNECTOR-ASSY;-,YFH800-01,YRH187RH	S.N.A
..2		AA67-10038A	LENS;43INCH,SSM-75RS-43,-,SEKINOS,R	
..2		AA67-10036A	LENS-ASSY;43INCH,SSM-75RS-43,-,SEKINOS,C	
..2		AA64-00206B	CASE-COUPLER,R;-,PROJECTION,-,ALDC8,-,BL	S.N.A
..2		AA91-00103C	ASSY-WIRE,CRT;-,-,7CRT,PROJECTION	S.N.A
...3		AA61-00053B	BRACKET-WIRE;-,PROJECTION,SECC-1,T1.6,-,	S.N.A
...3		AA61-00054B	BRACKET-EARTH;-,PROJECTION,PBS,-,-,-,-	S.N.A
...3		AA61-00055C	BRACKET-CRT,WIRE;-,PJT,SUS304 1/8H,-,-,-	S.N.A
..2		AA26-30006F	TRANS-FLYBACK;-,FWZ-50A001C,55,30KV	
..2		AA63-00061B	SPACER-CAP;EPDM,-,BLK,-,PROJECTION,-	
..2		AA63-00091C	SPACER-CLENS;SILICON,-,GRAY,-,PROJECTION	S.N.A
..2		AA63-00060C	SPACER-CRT;SILICON,-,GRAY,7,PROJECTION,	S.N.A
..2		AA63-60025A	SPACER-DY;NEOPRENE,-,BLK,V0,S4388,-	S.N.A
⚠ ..2		AA27-50005C	DEFLECTION-YOKE;-,DPD-4392AL,43'/PJTCRT,	
⚠ ..2		AA03-10021K	CRT-MONO;-,P16LFM00RFA(AU),-,7,90deg,9	
..2		AA27-00003B	MAGNET-CONVERGENCE;-,JH92LT-029,29.1MM	
..2		AA63-10002A	BAND-TIE;-,NYLON66 V2,-,-,L100,NTR,-,-	S.N.A
..2		AA63-00099A	SPACER-FELT;PJT,-,BLK,-,30X30	S.N.A
..2		AA63-00076A	SPACER-LENS;FELT ,T1.0,BROWN,7CRT,PROJE	S.N.A
..2		AA61-00056B	BRACKET-LENS;-,PROJECTION,SECC,T1.6,-,-,	S.N.A
..2		AA60-10011A	SCREW-TAPTITE;HH,+,PC,M4,L12,ZPC(BLK),SW	S.N.A

ASSY-CABINET,MID

1	*	AA91-00442A	ASSY-CABINET,MID;-,WOOD,KBM21-58 ,43J5	
..2	BF+CM	AA60-10051B	SCREW-WOOD;RH,+,M3.5,L11,ZPC(YEL),SWRCH1	S.N.A
..2	CABMID	AA60-10050X	SCREW-WOOD;FH,+,M3.5,L32,ZPC(YEL),SWRCH1	S.N.A
..2	CABMID	AA63-00105D	SPACER-FELT;FELT,T2.0,-,-,-,-	S.N.A
..2	CABMID	AA61-00097A	HOLDER-WIRE;-,-,NYLON 6/6,-,NTR,-	S.N.A
..2	CABMID	AA63-00105C	SPACER-FELT;FELT,T2.0,-,-,-,-	S.N.A
..2	CABMID	AA66-40011A	ROLLER-PAPER;PAPER,OD36,L80,T3,-,SP4388P	S.N.A
..2	CABMID	AA65-30115A	CLAMP-WIRE;FE,-,BLK,2X150,PRJT,-	
..2	CAS+CM	6002-000214	SCREW-TAPPING;TH,+,1,M4.0,L16,ZPC(BLK),M	S.N.A
..2	SPK	AA60-00043A	SPACER-SPEAKER;FELT,T2,-,-,43J5,-	
..2	SPK+CM	AA60-10051A	SCREW-WOOD;PH,+,M4,L16,ZPC(BLK),SWRCH18A	S.N.A
..2		AA61-20136A	HOLDER-MASK,PIN;-,S4388,NYLON,-,BLK,#066	S.N.A
..2		AA63-00066C	SPACER-DUAL,LOCK;#250,-,-,11X20,-,-	S.N.A
..2		AA63-00193B	COVER-AIRVENT;-,533R,-,HIPS,VO,BLK,-,-	S.N.A
..2		AA64-00467C	CABINET-LEG,B;-,43J5,SV704P,ABS,HB,BLK,T	
..2		AA64-01279A	CABINET MIDDLE;43J5,KMB21-58 ,WOOD,-,-	
..2		AA61-10387A	BRACKET-GRILLE;-,SVP-462J,SECC-1,T0.5,-,	S.N.A
..2		3001-000279	SPEAKER;30W,8ohm,91dB,20Hz	
..2		3001-001107	SPEAKER;20W,8ohm,95dB,1300Hz	
..2		AA39-00042A	LEAD CONNECTOR-ASSY;-,-,-,-,-,-,-,-,-,RE	
..2		AA39-20505U	LEAD CONNECTOR-ASSY,,-,-,4P,-,-,-,YSH250	
..2		AA61-00094B	HOLDER-RAIL;-,PCJ533R,ABS,HB,BLK,240	S.N.A
..2		AA61-00185B	HOLDER-SCREEN,15T;-,43J2,43J5,ABS,HB,BLK	
..2		AA61-00185C	HOLDER-SCREEN,15T;-,43J2,43J5,ABS,HB,BLK	
..2		AA61-00458A	CASTER;-,-,TP4015-05 NYL,OH47,-,-,SR4	S.N.A

ASSY CABINET MASK

1	*	AA91-00395A	ASSY CABINET MASK;-,HB,BLK,S704+B702 TAN	
..2		AA64-01164B	CABINET-MASK,SIDE;43J5,S704+B702,ABS,HB,	
...3		AA64-01164A	CABINET-MASK,SIDE;43J5,L653 APCHUL,ABS,H	S.N.A
..2		AA64-01161E	CABINET-MASK,BOT;43J5HF,S704+B702 DOLBY,	
...3		AA64-01161A	CABINET-MASK;43J5,L872 APCHUL,ABS,HB,BLK	S.N.A
..2		AA64-01161D	CABINET-MASK,TOP;43J5HF,S704+B702 TANTUS	
...3		AA64-01161A	CABINET-MASK;43J5,L872 APCHUL,ABS,HB,BLK	S.N.A
..2		AA63-00063A	SPACER-DUAL,LOCK;#400,-,-,19X19,SVP-614J	S.N.A
..2		AA61-00441B	HOLDER-CORNER;E2 ALL,ABS,BLK,HB,-,S704+B	S.N.A

ASSY ACCESSORY

1	*	AA94-02817A	ASSY ACCESSORY;SP53J5HFX/SED,J51A,SWISS	S.N.A
..2		AA68-01137A	MANUAL USERS;SP43J5HF/53J5HF,-,GER,-,W/P	S.N.A
..2		AA69-30009C	BAG-SHEET;LDPE,T0.08,W150,L120,-,-,-	S.N.A
..2		AA68-00856A	MANUAL USERS;J51A,W/P100(G),44P,B5,1,ENG	S.N.A
..2		AA61-20126A	HOLDER-LEG;-,-,ABS,HB,BLK,-	S.N.A
..2		AA39-40001B	CABLE-RCA;-,RCA,1500mm,0.12/10,RED/WHT/Y	

REMOCON

1	*	AA59-00100A	REMOCON;-,TM57,KS88P0416S,53,L/GRAY,S/	

7-2 SP43J5HFX/RAD

ASSY PCB MAIN(OPT)

Level	Loc. No.	Code No.	Description ; Specification	Remark
1	*	AA94-03113M	ASSY PCB MAIN(OPT);SP43J5HFX/RAD,J51A,NE	
..2	C664	2401-001068	C-AL;3300uF,20%,50V,GP,BK,22x40,10	
..2	C665	2401-000737	C-AL;2200uF,20%,50V,GP,TP,18x35.5,7	
..2	CN201	3711-003051	CONNECTOR-HEADER;BOX,8P,1R,2.5mm,STRAGHT	
..2	CN202	3711-003052	CONNECTOR-HEADER;BOX,10P,1R,2.5mm,STRAGH	
..2	CN501	3711-003051	CONNECTOR-HEADER;BOX,8P,1R,2.5mm,STRAGHT	
..2	CN801	3711-003974	CONNECTOR-HEADER;BOX,12P,1R,2.5mm,STRAIG	
..2	CNT01	3710-001208	CONNECTOR-SOCKET;32P,2R,2.54mm,STRAIGHT,	
..2	CNT02	3710-001208	CONNECTOR-SOCKET;32P,2R,2.54mm,STRAIGHT,	
..2	CNY01	3711-003973	CONNECTOR-HEADER;BOX,11P,1R,2.5mm,STRAIG	
..2	CS803	2401-003370	C-AL;47uF,20%,450V,GP,BK,16X35.5,7.	
⚠ ..2	DS801	0402-000102	DIODE-BRIDGE;D2SB60,600V,1.5A,-	
..2	H001	AA40-10006S	TUNER-F/S;TECC2949PG30A(S),PAL-B/G,TR,18	
⚠ ..2	IC101	AA96-00110C	ASSY-H/S;-,-,AA62-30013K,SI-3090C,-	
...3		1203-000577	IC-VOLTAGE REGUATOR;3090,ZIP,5P,-,PLASTI	
...3		6003-000333	SCREW-TAPTITE;RH,+,2S,M3,L10,ZPC(YEL),SW	S.N.A
...3		AA62-30013K	HEATSINK-ES;-,-,-,-,44/18,-,WHT,A6063 EX	
⚠ ..2	IC102	AA96-00110A	ASSY-H/S;-,-,AA62-30013K,SI-3050C,-	
...3		1203-000203	IC-POSI.ADJUST REG.;3050,TO-220,5P,-,PLA	
...3		6003-000333	SCREW-TAPTITE;RH,+,2S,M3,L10,ZPC(YEL),SW	S.N.A
...3		AA62-30013K	HEATSINK-ES;-,-,-,-,44/18,-,WHT,A6063 EX	
⚠ ..2	IC103	1204-001276	IC-SOUND PROCESSOR;TDA9810,DIP,24P,400MI	
⚠ ..2	IC502	AA96-00110A	ASSY-H/S;-,-,AA62-30013K,SI-3050C,-	
⚠ ..2	IC503	AA96-00110A	ASSY-H/S;-,-,AA62-30013K,SI-3050C,-	
⚠ ..2	IC504	AA96-00110A	ASSY-H/S;-,-,AA62-30013K,SI-3050C,-	
⚠ ..2	IC665	AA96-00038A	ASSY-H/S;-,SOUND AMP,AA62-30173E,TDA726	
...3		0205-000129	GREASE-SILICON;SC102,JAPAN	S.N.A
...3		1201-001026	IC-POWER AMP;7265,ZIP,11P,19.6MIL,DUAL,1	
...3		6003-000333	SCREW-TAPTITE;RH,+,2S,M3,L10,ZPC(YEL),SW	S.N.A
...3		AA62-30173E	HEAT-SINK,ES;-,-,T1.0,WHITE,SCREW-HOLE(1	S.N.A
..2	IF/CAB	AA39-30007B	IF-CABLE;-,T,150mm,1365#26	
..2	L201	AA27-10001C	COIL-CHOKE;-,100uH,K,-,5.0A,ST,700UH-K(R	
..2	L603	AA29-00004A	FILTER-LINE NOISE;-,20UH,3A,AC80-260V,TQ	
..2	QZ107	AA96-50162F	ASSY-H/S;-,POWER,AA62-30013E,2SA1011,30	
...3		0502-000131	TR-POWER;2SA1011-D,PNP,1.2W,TO-220,-,60	
...3		6003-000333	SCREW-TAPTITE;RH,+,2S,M3,L10,ZPC(YEL),SW	S.N.A
...3		AA62-30013E	HEAT-SINK,ES;-,A6063 EXTR,-,-,30(21) T02	S.N.A
..2	QZ108	AA96-50162G	ASSY-H/S;-,AMP,AA62-30013E,2SC2344,30MM	
...3		0502-000153	TR-POWER;2SC2344-D,NPN,1.2W,TO-220,-,60	
...3		6003-000333	SCREW-TAPTITE;RH,+,2S,M3,L10,ZPC(YEL),SW	S.N.A
...3		AA62-30013E	HEAT-SINK,ES;-,A6063 EXTR,-,-,30(21) T02	S.N.A
..2	R913	2001-000786	R-CARBON;47KOHM,5%,1/8W,AA,TP,1.8X3.2MM	
..2	RL801	3501-001053	RELAY-POWER;5VDC,530MW,10A,1FORMA,15MS,5	
..2	TS801	AA26-00019A	TRANS-SWITCHING;-,AC80~260V,-,US,-,4MH,B	
..2	X901	2801-003224	CRYSTAL-UNIT;32.768KHZ,20PPM,28-AAY,12.5	
..2		AA95-00519E	ASSY-PCB,PROSCAN;-,SP53J5HF,J51A,-,-,-	
...3	CNP901	3711-003543	CONNECTOR-HEADER;NOWALL,16P,1R,2.54MM,AN	
...3	CNP902	3711-001283	CONNECTOR-HEADER;NOWALL,14P,1R,2.5mm,ANG	
...3	CNP903	3711-001283	CONNECTOR-HEADER;NOWALL,14P,1R,2.5mm,ANG	
...3	CNP904	3711-001283	CONNECTOR-HEADER;NOWALL,14P,1R,2.5mm,ANG	
...3	XP601	2801-003811	CRYSTAL-UNIT;24.576MHZ,20PPM,28-AAM,30PF	
...3		AA99-20079H	ASSY-PCB SUB,AUTO; AA95-00519E ,V	S.N.A
....4	CP101	2203-000938	C-CERAMIC,CHIP;0.47nF,5%,50V,NP0,TP,2012	
....4	CP102	2203-000938	C-CERAMIC,CHIP;0.47nF,5%,50V,NP0,TP,2012	
....4	CP103	2203-000761	C-CERAMIC,CHIP;330nF,10%,16V,X7R,TP,2012	
....4	CP104	2203-000761	C-CERAMIC,CHIP;330nF,10%,16V,X7R,TP,2012	
....4	CP106	2203-000444	C-CERAMIC,CHIP;1nF,10%,50V,X7R,TP,2012,-	
....4	CP109	2203-000218	C-CERAMIC,CHIP;100nF,20%,50V,Y5V,TP,2012	
....4	CP110	2401-001496	C-AL;47uF,20%,16V,GP,TP,5x7,5	
....4	CP111	2203-000979	C-CERAMIC,CHIP;47nF,10%,50V,X7R,TP,2012	
....4	CP112	2401-000486	C-AL;10uF,20%,50V,GP,TP,6.3x7mm,5	
....4	CP113	2203-001172	C-CERAMIC,CHIP;0.006nF,0.25pF,50V,NP0,TP	
....4	CP114	2203-001172	C-CERAMIC,CHIP;0.006nF,0.25pF,50V,NP0,TP	
....4	CP115	2203-000218	C-CERAMIC,CHIP;100nF,20%,50V,Y5V,TP,2012	
....4	CP116	2401-002009	C-AL;100uF,20%,16V,GP,TP,6.3x7,5	
....4	CP117	2203-000218	C-CERAMIC,CHIP;100nF,20%,50V,Y5V,TP,2012	
....4	CP118	2401-002009	C-AL;100uF,20%,16V,GP,TP,6.3x7,5	
....4	CP119	2203-000218	C-CERAMIC,CHIP;100nF,20%,50V,Y5V,TP,2012	
....4	CP120	2203-001002	C-CERAMIC,CHIP;0.047nF,5%,50V,NP0,TP,201	
....4	CP121	2203-001002	C-CERAMIC,CHIP;0.047nF,5%,50V,NP0,TP,201	
....4	CP122	2203-000761	C-CERAMIC,CHIP;330nF,10%,16V,X7R,TP,2012	
....4	CP126	2203-000218	C-CERAMIC,CHIP;100nF,20%,50V,Y5V,TP,2012	
....4	CP127	2401-002009	C-AL;100uF,20%,16V,GP,TP,6.3x7,5	
....4	CP128	2401-002009	C-AL;100uF,20%,16V,GP,TP,6.3x7,5	
....4	CP129	2203-000218	C-CERAMIC,CHIP;100nF,20%,50V,Y5V,TP,2012	
....4	CP130	2401-002009	C-AL;100uF,20%,16V,GP,TP,6.3x7,5	
....4	CP131	2203-000218	C-CERAMIC,CHIP;100nF,20%,50V,Y5V,TP,2012	
....4	CP132	2401-000486	C-AL;10uF,20%,50V,GP,TP,6.3x7mm,5	
....4	CP133	2203-000218	C-CERAMIC,CHIP;100nF,20%,50V,Y5V,TP,2012	
....4	CP135	2203-000575	C-CERAMIC,CHIP;220NF,10%,25V,X7R,TP,2012	
....4	CP137	2203-000218	C-CERAMIC,CHIP;100nF,20%,50V,Y5V,TP,2012	
....4	CP139	2203-000575	C-CERAMIC,CHIP;220NF,10%,25V,X7R,TP,2012	
....4	CP141	2203-000218	C-CERAMIC,CHIP;100nF,20%,50V,Y5V,TP,2012	
....4	CP142	2203-000938	C-CERAMIC,CHIP;0.47nF,5%,50V,NP0,TP,2012	
....4	CP143	2203-000938	C-CERAMIC,CHIP;0.47nF,5%,50V,NP0,TP,2012	
....4	CP144	2203-000938	C-CERAMIC,CHIP;0.47nF,5%,50V,NP0,TP,2012	
....4	CP145	2203-000761	C-CERAMIC,CHIP;330nF,10%,16V,X7R,TP,2012	
....4	CP301	2203-000218	C-CERAMIC,CHIP;100nF,20%,50V,Y5V,TP,2012	
....4	CP302	2203-000218	C-CERAMIC,CHIP;100nF,20%,50V,Y5V,TP,2012	
....4	CP303	2203-000218	C-CERAMIC,CHIP;100nF,20%,50V,Y5V,TP,2012	
....4	CP304	2203-000218	C-CERAMIC,CHIP;100nF,20%,50V,Y5V,TP,2012	
....4	CP305	2401-001496	C-AL;47uF,20%,16V,GP,TP,5x7,5	
....4	CP306	2203-000218	C-CERAMIC,CHIP;100nF,20%,50V,Y5V,TP,2012	
....4	CP307	2401-001496	C-AL;47uF,20%,16V,GP,TP,5x7,5	
....4	CP308	2203-000218	C-CERAMIC,CHIP;100nF,20%,50V,Y5V,TP,2012	
....4	CP309	2401-001496	C-AL;47uF,20%,16V,GP,TP,5x7,5	
....4	CP310	2203-000218	C-CERAMIC,CHIP;100nF,20%,50V,Y5V,TP,2012	
....4	CP311	2401-001496	C-AL;47uF,20%,16V,GP,TP,5x7,5	
....4	CP312	2203-000218	C-CERAMIC,CHIP;100nF,20%,50V,Y5V,TP,2012	
....4	CP313	2203-000218	C-CERAMIC,CHIP;100nF,20%,50V,Y5V,TP,2012	
....4	CP314	2203-000218	C-CERAMIC,CHIP;100nF,20%,50V,Y5V,TP,2012	
....4	CP315	2203-000218	C-CERAMIC,CHIP;100nF,20%,50V,Y5V,TP,2012	
....4	CP316	2203-000218	C-CERAMIC,CHIP;100nF,20%,50V,Y5V,TP,2012	
....4	CP317	2203-000218	C-CERAMIC,CHIP;100nF,20%,50V,Y5V,TP,2012	
....4	CP401	2203-000218	C-CERAMIC,CHIP;100nF,20%,50V,Y5V,TP,2012	
....4	CP402	2203-000218	C-CERAMIC,CHIP;100nF,20%,50V,Y5V,TP,2012	
....4	CP403	2401-002009	C-AL;100uF,20%,16V,GP,TP,6.3x7,5	
....4	CP404	2203-000218	C-CERAMIC,CHIP;100nF,20%,50V,Y5V,TP,2012	
....4	CP405	2203-000218	C-CERAMIC,CHIP;100nF,20%,50V,Y5V,TP,2012	
....4	CP406	2203-000142	C-CERAMIC,CHIP;1.5nF,10%,50V,X7R,TP,2012	
....4	CP407	2203-000239	C-CERAMIC,CHIP;0.1nF,5%,50V,NP0,TP,2012	
....4	CP408	2203-000218	C-CERAMIC,CHIP;100nF,20%,50V,Y5V,TP,2012	
....4	CP409	2203-000555	C-CERAMIC,CHIP;0.02nF,5%,50V,NP0,TP,2012	
....4	CP410	2203-000218	C-CERAMIC,CHIP;100nF,20%,50V,Y5V,TP,2012	
....4	CP411	2203-000218	C-CERAMIC,CHIP;100nF,20%,50V,Y5V,TP,2012	
....4	CP412	2203-000555	C-CERAMIC,CHIP;0.02nF,5%,50V,NP0,TP,2012	
....4	CP413	2203-000555	C-CERAMIC,CHIP;0.02nF,5%,50V,NP0,TP,2012	
....4	CP414	2203-000218	C-CERAMIC,CHIP;100nF,20%,50V,Y5V,TP,2012	
....4	CP415	2203-000218	C-CERAMIC,CHIP;100nF,20%,50V,Y5V,TP,2012	
....4	CP416	2203-000218	C-CERAMIC,CHIP;100nF,20%,50V,Y5V,TP,2012	
....4	CP417	2203-000218	C-CERAMIC,CHIP;100nF,20%,50V,Y5V,TP,2012	
....4	CP418	2404-001020	C-TA,CHIP;10uF,20%,10V,GP,TP,3216,3.2	
....4	CP419	2404-001020	C-TA,CHIP;10uF,20%,10V,GP,TP,3216,3.2	
....4	CP420	2404-001020	C-TA,CHIP;10uF,20%,10V,GP,TP,3216,3.2	
....4	CP501	2203-000925	C-CERAMIC,CHIP;470NF,+80-20%,50V,Y5V,TP,	
....4	CP502	2203-000925	C-CERAMIC,CHIP;470NF,+80-20%,50V,Y5V,TP,	
....4	CP503	2203-000925	C-CERAMIC,CHIP;470NF,+80-20%,50V,Y5V,TP,	
....4	CP504	2203-000925	C-CERAMIC,CHIP;470NF,+80-20%,50V,Y5V,TP,	
....4	CP505	2203-000925	C-CERAMIC,CHIP;470NF,+80-20%,50V,Y5V,TP,	
....4	CP506	2401-001496	C-AL;47uF,20%,16V,GP,TP,5x7,5	
....4	CP507	2203-000218	C-CERAMIC,CHIP;100nF,20%,50V,Y5V,TP,2012	
....4	CP508	2203-000925	C-CERAMIC,CHIP;470NF,+80-20%,50V,Y5V,TP,	
....4	CP509	2203-000925	C-CERAMIC,CHIP;470NF,+80-20%,50V,Y5V,TP,	
....4	CP510	2203-000925	C-CERAMIC,CHIP;470NF,+80-20%,50V,Y5V,TP,	
....4	CP511	2203-000925	C-CERAMIC,CHIP;470NF,+80-20%,50V,Y5V,TP,	
....4	CP512	2203-000925	C-CERAMIC,CHIP;470NF,+80-20%,50V,Y5V,TP,	
....4	CP513	2203-000925	C-CERAMIC,CHIP;470NF,+80-20%,50V,Y5V,TP,	
....4	CP514	2203-000925	C-CERAMIC,CHIP;470NF,+80-20%,50V,Y5V,TP,	
....4	CP515	2203-000925	C-CERAMIC,CHIP;470NF,+80-20%,50V,Y5V,TP,	
....4	CP516	2203-000925	C-CERAMIC,CHIP;470NF,+80-20%,50V,Y5V,TP,	
....4	CP517	2203-000925	C-CERAMIC,CHIP;470NF,+80-20%,50V,Y5V,TP,	

Level	Loc. No.	Code No.	Description ; Specification	Remark
....4	CP518	2401-000598	C-AL;1uF,20%,50V,GP,TP,4x7,5	
....4	CP519	2203-000925	C-CERAMIC,CHIP;470NF,+80-20%,50V,Y5V,TP,	
....4	CP520	2203-000925	C-CERAMIC,CHIP;470NF,+80-20%,50V,Y5V,TP,	
....4	CP521	2203-000925	C-CERAMIC,CHIP;470NF,+80-20%,50V,Y5V,TP,	
....4	CP522	2203-000925	C-CERAMIC,CHIP;470NF,+80-20%,50V,Y5V,TP,	
....4	CP523	2203-000925	C-CERAMIC,CHIP;470NF,+80-20%,50V,Y5V,TP,	
....4	CP524	2203-000260	C-CERAMIC,CHIP;10nF,10%,50V,X7R,TP,2012	
....4	CP525	2203-000218	C-CERAMIC,CHIP;100nF,20%,50V,Y5V,TP,2012	
....4	CP527	2203-000218	C-CERAMIC,CHIP;100nF,20%,50V,Y5V,TP,2012	
....4	CP528	2401-001496	C-AL;47uF,20%,16V,GP,TP,5x7,5	
....4	CP529	2203-000575	C-CERAMIC,CHIP;220NF,10%,25V,X7R,TP,2012	
....4	CP530	2203-000575	C-CERAMIC,CHIP;220NF,10%,25V,X7R,TP,2012	
....4	CP531	2203-000575	C-CERAMIC,CHIP;220NF,10%,25V,X7R,TP,2012	
....4	CP532	2203-000925	C-CERAMIC,CHIP;470NF,+80-20%,50V,Y5V,TP,	
....4	CP533	2401-000486	C-AL;10uF,20%,50V,GP,TP,6.3x7mm,5	
....4	CP534	2203-000260	C-CERAMIC,CHIP;10nF,10%,50V,X7R,TP,2012	
....4	CP535	2203-000260	C-CERAMIC,CHIP;10nF,10%,50V,X7R,TP,2012	
....4	CP536	2203-000260	C-CERAMIC,CHIP;10nF,10%,50V,X7R,TP,2012	
....4	CP537	2203-000260	C-CERAMIC,CHIP;10nF,10%,50V,X7R,TP,2012	
....4	CP538	2203-000260	C-CERAMIC,CHIP;10nF,10%,50V,X7R,TP,2012	
....4	CP539	2203-000260	C-CERAMIC,CHIP;10nF,10%,50V,X7R,TP,2012	
....4	CP540	2401-000486	C-AL;10uF,20%,50V,GP,TP,6.3x7mm,5	
....4	CP541	2203-001002	C-CERAMIC,CHIP;0.047nF,5%,50V,NP0,TP,201	
....4	CP542	2203-001002	C-CERAMIC,CHIP;0.047nF,5%,50V,NP0,TP,201	
....4	CP545	2203-000925	C-CERAMIC,CHIP;470NF,+80-20%,50V,Y5V,TP,	
....4	CP546	2203-000260	C-CERAMIC,CHIP;10nF,10%,50V,X7R,TP,2012	
....4	CP547	2203-000260	C-CERAMIC,CHIP;10nF,10%,50V,X7R,TP,2012	
....4	CP548	2203-000260	C-CERAMIC,CHIP;10nF,10%,50V,X7R,TP,2012	
....4	CP549	2203-000218	C-CERAMIC,CHIP;100nF,20%,50V,Y5V,TP,2012	
....4	CP550	2203-000218	C-CERAMIC,CHIP;100nF,20%,50V,Y5V,TP,2012	
....4	CP551	2203-000218	C-CERAMIC,CHIP;100nF,20%,50V,Y5V,TP,2012	
....4	CP552	2401-001496	C-AL;47uF,20%,16V,GP,TP,5x7,5	
....4	CP553	2203-000218	C-CERAMIC,CHIP;100nF,20%,50V,Y5V,TP,2012	
....4	CP554	2203-000218	C-CERAMIC,CHIP;100nF,20%,50V,Y5V,TP,2012	
....4	CP555	2203-000218	C-CERAMIC,CHIP;100nF,20%,50V,Y5V,TP,2012	
....4	CP556	2203-000218	C-CERAMIC,CHIP;100nF,20%,50V,Y5V,TP,2012	
....4	CP559	2203-000218	C-CERAMIC,CHIP;100nF,20%,50V,Y5V,TP,2012	
....4	CP601	2203-001088	C-CERAMIC,CHIP;0.005nF,0.25pF,50V,NP0,TP	
....4	CP602	2203-001088	C-CERAMIC,CHIP;0.005nF,0.25pF,50V,NP0,TP	
....4	CP603	2203-000925	C-CERAMIC,CHIP;470NF,+80-20%,50V,Y5V,TP,	
....4	CP604	2203-000938	C-CERAMIC,CHIP;0.47nF,5%,50V,NP0,TP,2012	
....4	CP605	2203-000444	C-CERAMIC,CHIP;1nF,10%,50V,X7R,TP,2012,-	
....4	CP607	2203-000218	C-CERAMIC,CHIP;100nF,20%,50V,Y5V,TP,2012	
....4	CP609	2203-000218	C-CERAMIC,CHIP;100nF,20%,50V,Y5V,TP,2012	
....4	CP610	2203-000218	C-CERAMIC,CHIP;100nF,20%,50V,Y5V,TP,2012	
....4	CP611	2203-000444	C-CERAMIC,CHIP;1nF,10%,50V,X7R,TP,2012,-	
....4	CP612	2203-000444	C-CERAMIC,CHIP;1nF,10%,50V,X7R,TP,2012,-	
....4	CP613	2203-000444	C-CERAMIC,CHIP;1nF,10%,50V,X7R,TP,2012,-	
....4	CP614	2203-000218	C-CERAMIC,CHIP;100nF,20%,50V,Y5V,TP,2012	
....4	CP615	2203-000218	C-CERAMIC,CHIP;100nF,20%,50V,Y5V,TP,2012	
....4	CP616	2203-001002	C-CERAMIC,CHIP;0.047nF,5%,50V,NP0,TP,201	
....4	CP617	2203-000218	C-CERAMIC,CHIP;100nF,20%,50V,Y5V,TP,2012	
....4	CP618	2203-000239	C-CERAMIC,CHIP;0.1nF,5%,50V,NP0,TP,2012	
....4	CP619	2203-000218	C-CERAMIC,CHIP;100nF,20%,50V,Y5V,TP,2012	
....4	CP620	2203-000218	C-CERAMIC,CHIP;100nF,20%,50V,Y5V,TP,2012	
....4	CP621	2203-000239	C-CERAMIC,CHIP;0.1nF,5%,50V,NP0,TP,2012	
....4	CP622	2203-000142	C-CERAMIC,CHIP;1.5nF,10%,50V,X7R,TP,2012	
....4	CP623	2203-000218	C-CERAMIC,CHIP;100nF,20%,50V,Y5V,TP,2012	
....4	CP624	2401-001496	C-AL;47uF,20%,16V,GP,TP,5x7,5	
....4	CP625	2203-000218	C-CERAMIC,CHIP;100nF,20%,50V,Y5V,TP,2012	
....4	CP626	2401-002009	C-AL;100uF,20%,16V,GP,TP,6.3x7,5	
....4	CP627	2203-000218	C-CERAMIC,CHIP;100nF,20%,50V,Y5V,TP,2012	
....4	CP628	2401-002009	C-AL;100uF,20%,16V,GP,TP,6.3x7,5	
....4	CP629	2203-000218	C-CERAMIC,CHIP;100nF,20%,50V,Y5V,TP,2012	
....4	CP630	2203-000218	C-CERAMIC,CHIP;100nF,20%,50V,Y5V,TP,2012	
....4	CP631	2401-000598	C-AL;1uF,20%,50V,GP,TP,4x7,5	
....4	CP901	2404-001229	C-TA,CHIP;4.7uF,20%,25V,GP,TP,3528	
....4	CP902	2203-000218	C-CERAMIC,CHIP;100nF,20%,50V,Y5V,TP,2012	
....4	CP904	2203-001088	C-CERAMIC,CHIP;0.005nF,0.25pF,50V,NP0,TP	
....4	CP905	2203-000925	C-CERAMIC,CHIP;470NF,+80-20%,50V,Y5V,TP,	
....4	CP906	2203-000495	C-CERAMIC,CHIP;2.2nF,10%,50V,X7R,TP,2012	
....4	DP501	0403-001117	DIODE-ZENER;RLZ12B,5%,500mW,LL-34,TP	
....4	DP502	0403-001117	DIODE-ZENER;RLZ12B,5%,500mW,LL-34,TP	
....4	DP503	0403-001117	DIODE-ZENER;RLZ12B,5%,500mW,LL-34,TP	
....4	DP504	0403-000620	DIODE-ZENER;RLZ5.6B,5.6V,5.45-5.73V,400m	
....4	DP505	0403-000620	DIODE-ZENER;RLZ5.6B,5.6V,5.45-5.73V,400m	
....4	DP601	0401-000133	DIODE-SWITCHING;RLS4148,100V,200mA,SOD-8	

Level	Loc. No.	Code No.	Description ; Specification	Remark
....4	DP602	0403-000620	DIODE-ZENER;RLZ5.6B,5.6V,5.45-5.73V,400m	
....4	DP603	0401-000133	DIODE-SWITCHING;RLS4148,100V,200mA,SOD-8	
....4	DP604	0401-000160	DIODE-SWITCHING;ISS314,30V,100mA,USC,TP	
....4	DP605	0401-000160	DIODE-SWITCHING;ISS314,30V,100mA,USC,TP	
....4	DP606	0401-000133	DIODE-SWITCHING;RLS4148,100V,200mA,SOD-8	
....4	DP607	0403-000620	DIODE-ZENER;RLZ5.6B,5.6V,5.45-5.73V,400m	
....4	DP901	0401-000133	DIODE-SWITCHING;RLS4148,100V,200mA,SOD-8	
....4	DP902	0401-000133	DIODE-SWITCHING;RLS4148,100V,200mA,SOD-8	
....4	DP903	0401-000133	DIODE-SWITCHING;RLS4148,100V,200mA,SOD-8	
....4	DP904	0401-000133	DIODE-SWITCHING;RLS4148,100V,200mA,SOD-8	
....4	FP101	2901-001120	FILTER-EMI SMD;25V,100mA,-,-,3.2x1.6x1,T	
....4	FP102	2901-001120	FILTER-EMI SMD;25V,100mA,-,-,3.2x1.6x1,T	
....4	FP301	2901-001120	FILTER-EMI SMD;25V,100mA,-,-,3.2x1.6x1,T	
....4	FP901	2901-000226	FILTER-EMI SMD;25V,0.3A,-,100pF,3.2x1.25	
....4	FP902	2901-000226	FILTER-EMI SMD;25V,0.3A,-,100pF,3.2x1.25	
....4	FP903	2901-000226	FILTER-EMI SMD;25V,0.3A,-,100pF,3.2x1.25	
....4	FP904	2901-000226	FILTER-EMI SMD;25V,0.3A,-,100pF,3.2x1.25	
....4	FP905	2901-000226	FILTER-EMI SMD;25V,0.3A,-,100pF,3.2x1.25	
....4	FP906	2901-000226	FILTER-EMI SMD;25V,0.3A,-,100pF,3.2x1.25	
....4	FP907	2901-000226	FILTER-EMI SMD;25V,0.3A,-,100pF,3.2x1.25	
....4	FP908	2901-000226	FILTER-EMI SMD;25V,0.3A,-,100pF,3.2x1.25	
⚠ 4	ICP101	1204-001362	IC-VIDEO PROCESS;VPC3215C-B8,PLCC,43P,-,	
⚠ 4	ICP103	1205-001172	IC-INTERFACE;CIP3250A-B1,PLCC,68P,-,PLAS	
⚠ 4	ICP301	1204-001623	IC-VERTICAL PROCESSO;SDA9400,QFP,64P,-,P	
⚠ 4	ICP302	1203-001419	IC-VOLTAGE REGULATOR;4931,TO-252,3P,6.6x	
⚠ 4	ICP401	1002-001045	IC-D/A CONVERTER;9280,8BIT,PLCC,68P,-,-,	
⚠ 4	ICP501	1204-001550	IC-VIDEO PROCESS;CXA2101AQ,QFP,80P,-,PLA	
⚠ 4	ICP601	1204-001372	IC-HOR./VER.PROCESSO;SDA9361,QFP,44P,-,P	
⚠ 4	ICP901	1202-000001	IC-VOLTAGE COMP;7533,TO-92,3P,-,SINGLE,	
....4	LP101	3301-001324	CORE-FERRITE BEAD;AB,15OHM,2X1.25X0.9MM,	S.N.A
....4	LP102	3301-001324	CORE-FERRITE BEAD;AB,15OHM,2X1.25X0.9MM,	S.N.A
....4	LP103	3301-001324	CORE-FERRITE BEAD;AB,15OHM,2X1.25X0.9MM,	S.N.A
....4	LP105	3301-001324	CORE-FERRITE BEAD;AB,15OHM,2X1.25X0.9MM,	S.N.A
....4	LP106	3301-001324	CORE-FERRITE BEAD;AB,15OHM,2X1.25X0.9MM,	S.N.A
....4	LP107	3301-001324	CORE-FERRITE BEAD;AB,15OHM,2X1.25X0.9MM,	S.N.A
....4	LP301	3301-001324	CORE-FERRITE BEAD;AB,15OHM,2X1.25X0.9MM,	S.N.A
....4	LP302	3301-001324	CORE-FERRITE BEAD;AB,15OHM,2X1.25X0.9MM,	S.N.A
....4	LP303	3301-001324	CORE-FERRITE BEAD;AB,15OHM,2X1.25X0.9MM,	S.N.A
....4	LP401	3301-001324	CORE-FERRITE BEAD;AB,15OHM,2X1.25X0.9MM,	S.N.A
....4	LP402	3301-001324	CORE-FERRITE BEAD;AB,15OHM,2X1.25X0.9MM,	S.N.A
....4	LP403	3301-001324	CORE-FERRITE BEAD;AB,15OHM,2X1.25X0.9MM,	S.N.A
....4	LP404	3301-001324	CORE-FERRITE BEAD;AB,15OHM,2X1.25X0.9MM,	S.N.A
....4	LP601	3301-001324	CORE-FERRITE BEAD;AB,15OHM,2X1.25X0.9MM,	S.N.A
....4	LP602	3301-001324	CORE-FERRITE BEAD;AB,15OHM,2X1.25X0.9MM,	S.N.A
....4	LP603	2703-001717	INDUCTOR-SMD;1.2uH,5%,3.2x2.5x2.2mm	
....4	LP901	3301-001186	CORE-FERRITE BEAD;AB,600ohm,3.2x1.6x1.3m	S.N.A
....4	LP902	3301-001186	CORE-FERRITE BEAD;AB,600ohm,3.2x1.6x1.3m	S.N.A
....4	LP903	3301-001324	CORE-FERRITE BEAD;AB,15OHM,2X1.25X0.9MM,	S.N.A
....4	LP904	3301-001184	CORE-FERRITE BEAD;AB,1.3kohm,4.5x3.2x1.3	S.N.A
....4	LP905	3301-001184	CORE-FERRITE BEAD;AB,1.3kohm,4.5x3.2x1.3	S.N.A
....4	LP906	3301-001184	CORE-FERRITE BEAD;AB,1.3kohm,4.5x3.2x1.3	S.N.A
....4	QP501	0501-000280	TR-SMALL SIGNAL;KSA1182,PNP,150mW,SOT-23	
....4	QP502	0501-000344	TR-SMALL SIGNAL;KSC1623-G,NPN,200mW,SOT-	
....4	QP503	0501-000344	TR-SMALL SIGNAL;KSC1623-G,NPN,200mW,SOT-	
....4	QP504	0501-000280	TR-SMALL SIGNAL;KSA1182,PNP,150mW,SOT-23	
....4	QP505	0501-000280	TR-SMALL SIGNAL;KSA1182,PNP,150mW,SOT-23	
....4	QP506	0501-000280	TR-SMALL SIGNAL;KSA1182,PNP,150mW,SOT-23	
....4	QP508	0501-000344	TR-SMALL SIGNAL;KSC1623-G,NPN,200mW,SOT-	
....4	QP602	0501-000344	TR-SMALL SIGNAL;KSC1623-G,NPN,200mW,SOT-	
....4	QP902	0501-000280	TR-SMALL SIGNAL;KSA1182,PNP,150mW,SOT-23	
....4	RP101	2007-000029	R-CHIP;0OHM,5%,1/10W,DA,TP,2012	
....4	RP102	2007-000947	R-CHIP;47OHM,5%,1/10W,DA,TP,2012	
....4	RP106	2007-000290	R-CHIP;100OHM,5%,1/10W,DA,TP,2012	
....4	RP112	2007-000290	R-CHIP;100OHM,5%,1/10W,DA,TP,2012	
....4	RP113	2007-000290	R-CHIP;100OHM,5%,1/10W,DA,TP,2012	
....4	RP114	2007-000290	R-CHIP;100OHM,5%,1/10W,DA,TP,2012	
....4	RP115	2007-000290	R-CHIP;100OHM,5%,1/10W,DA,TP,2012	
....4	RP117	2007-000029	R-CHIP;0OHM,5%,1/10W,DA,TP,2012	
....4	RP134	2007-000290	R-CHIP;100OHM,5%,1/10W,DA,TP,2012	
....4	RP135	2007-000290	R-CHIP;100OHM,5%,1/10W,DA,TP,2012	
....4	RP136	2011-000585	R-NETWORK;47ohm,5%,63mW,L,CHIP,8P,TP	
....4	RP137	2011-000585	R-NETWORK;47ohm,5%,63mW,L,CHIP,8P,TP	
....4	RP138	2011-000585	R-NETWORK;47ohm,5%,63mW,L,CHIP,8P,TP	
....4	RP139	2011-000585	R-NETWORK;47ohm,5%,63mW,L,CHIP,8P,TP	
....4	RP140	2011-000585	R-NETWORK;47ohm,5%,63mW,L,CHIP,8P,TP	
....4	RP141	2011-000585	R-NETWORK;47ohm,5%,63mW,L,CHIP,8P,TP	
....4	RP142	2011-000585	R-NETWORK;47ohm,5%,63mW,L,CHIP,8P,TP	

Level	Loc. No.	Code No.	Description ; Specification	Remark
....4	RP143	2011-000585	R-NETWORK;47ohm,5%,63mW,L,CHIP,8P,TP	
....4	RP153	2007-000401	R-CHIP;150OHM,5%,1/10W,DA,TP,2012	
....4	RP154	2007-000308	R-CHIP;10OHM,5%,1/10W,DA,TP,2012	
....4	RP155	2007-000947	R-CHIP;47OHM,5%,1/10W,DA,TP,2012	
....4	RP156	2007-000947	R-CHIP;47OHM,5%,1/10W,DA,TP,2012	
....4	RP157	2007-000947	R-CHIP;47OHM,5%,1/10W,DA,TP,2012	
....4	RP159	2007-001166	R-CHIP;75OHM,5%,1/10W,DA,TP,2012	
....4	RP161	2007-000290	R-CHIP;100OHM,5%,1/10W,DA,TP,2012	
....4	RP301	2007-000290	R-CHIP;100OHM,5%,1/10W,DA,TP,2012	
....4	RP302	2007-000290	R-CHIP;100OHM,5%,1/10W,DA,TP,2012	
....4	RP303	2007-000290	R-CHIP;100OHM,5%,1/10W,DA,TP,2012	
....4	RP304	2007-000290	R-CHIP;100OHM,5%,1/10W,DA,TP,2012	
....4	RP305	2007-000290	R-CHIP;100OHM,5%,1/10W,DA,TP,2012	
....4	RP401	2011-000585	R-NETWORK;47ohm,5%,63mW,L,CHIP,8P,TP	
....4	RP402	2011-000585	R-NETWORK;47ohm,5%,63mW,L,CHIP,8P,TP	
....4	RP403	2011-000585	R-NETWORK;47ohm,5%,63mW,L,CHIP,8P,TP	
....4	RP404	2011-000585	R-NETWORK;47ohm,5%,63mW,L,CHIP,8P,TP	
....4	RP405	2007-000290	R-CHIP;100OHM,5%,1/10W,DA,TP,2012	
....4	RP406	2007-000290	R-CHIP;100OHM,5%,1/10W,DA,TP,2012	
....4	RP407	2007-000290	R-CHIP;100OHM,5%,1/10W,DA,TP,2012	
....4	RP408	2007-001055	R-CHIP;6.2KOHM,5%,1/10W,DA,TP,2012	
....4	RP409	2007-000401	R-CHIP;150OHM,5%,1/10W,DA,TP,2012	
....4	RP411	2007-001166	R-CHIP;75OHM,5%,1/10W,DA,TP,2012	
....4	RP412	2007-001166	R-CHIP;75OHM,5%,1/10W,DA,TP,2012	
....4	RP413	2007-000401	R-CHIP;150OHM,5%,1/10W,DA,TP,2012	
....4	RP415	2007-001166	R-CHIP;75OHM,5%,1/10W,DA,TP,2012	
....4	RP416	2007-001166	R-CHIP;75OHM,5%,1/10W,DA,TP,2012	
....4	RP417	2007-000380	R-CHIP;13KOHM,5%,1/10W,DA,TP,2012	
....4	RP418	2007-000401	R-CHIP;150OHM,5%,1/10W,DA,TP,2012	
....4	RP419	2007-001166	R-CHIP;75OHM,5%,1/10W,DA,TP,2012	
....4	RP421	2007-001166	R-CHIP;75OHM,5%,1/10W,DA,TP,2012	
....4	RP422	2007-000300	R-CHIP;10KOHM,5%,1/10W,DA,TP,2012	
....4	RP423	2007-000401	R-CHIP;150OHM,5%,1/10W,DA,TP,2012	
....4	RP501	2007-000029	R-CHIP;0OHM,5%,1/10W,DA,TP,2012	
....4	RP502	2007-000029	R-CHIP;0OHM,5%,1/10W,DA,TP,2012	
....4	RP503	2007-000029	R-CHIP;0OHM,5%,1/10W,DA,TP,2012	
....4	RP504	2007-000030	R-CHIP;560OHM,5%,1/10W,DA,TP,2012	
....4	RP505	2007-000572	R-CHIP;220OHM,5%,1/10W,DA,TP,2012	
....4	RP506	2007-000493	R-CHIP;2.2KOHM,5%,1/10W,DA,TP,2012	
....4	RP507	2007-001166	R-CHIP;75OHM,5%,1/10W,DA,TP,2012	
....4	RP509	2007-000931	R-CHIP;470OHM,5%,1/10W,DA,TP,2012	
....4	RP510	2007-000938	R-CHIP;47KOHM,1%,1/10W,DA,TP,2012	
....4	RP513	2007-000290	R-CHIP;100OHM,5%,1/10W,DA,TP,2012	
....4	RP514	2007-000210	R-CHIP;1.1KOHM,5%,1/10W,DA,TP,2012	
....4	RP515	2007-000468	R-CHIP;1KOHM,5%,1/10W,DA,TP,2012	
....4	RP516	2007-000468	R-CHIP;1KOHM,5%,1/10W,DA,TP,2012	
....4	RP517	2007-000290	R-CHIP;100OHM,5%,1/10W,DA,TP,2012	
....4	RP518	2007-000210	R-CHIP;1.1KOHM,5%,1/10W,DA,TP,2012	
....4	RP519	2007-000290	R-CHIP;100OHM,5%,1/10W,DA,TP,2012	
....4	RP521	2007-000210	R-CHIP;1.1KOHM,5%,1/10W,DA,TP,2012	
....4	RP522	2007-000290	R-CHIP;100OHM,5%,1/10W,DA,TP,2012	
....4	RP523	2007-000210	R-CHIP;1.1KOHM,5%,1/10W,DA,TP,2012	
....4	RP524	2007-000290	R-CHIP;100OHM,5%,1/10W,DA,TP,2012	
....4	RP525	2007-000290	R-CHIP;100OHM,5%,1/10W,DA,TP,2012	
....4	RP526	2007-000210	R-CHIP;1.1KOHM,5%,1/10W,DA,TP,2012	
....4	RP527	2007-000290	R-CHIP;100OHM,5%,1/10W,DA,TP,2012	
....4	RP528	2007-000290	R-CHIP;100OHM,5%,1/10W,DA,TP,2012	
....4	RP529	2007-000210	R-CHIP;1.1KOHM,5%,1/10W,DA,TP,2012	
....4	RP530	2007-000290	R-CHIP;100OHM,5%,1/10W,DA,TP,2012	
....4	RP537	2007-000689	R-CHIP;3.3MOHM,5%,1/10W,DA,TP,2012	
....4	RP542	2007-000290	R-CHIP;100OHM,5%,1/10W,DA,TP,2012	
....4	RP543	2007-000290	R-CHIP;100OHM,5%,1/10W,DA,TP,2012	
....4	RP544	2007-000029	R-CHIP;0OHM,5%,1/10W,DA,TP,2012	
....4	RP546	2007-000290	R-CHIP;100OHM,5%,1/10W,DA,TP,2012	
....4	RP547	2007-000290	R-CHIP;100OHM,5%,1/10W,DA,TP,2012	
....4	RP549	2007-000671	R-CHIP;2KOHM,5%,1/10W,DA,TP,2012	
....4	RP550	2007-000290	R-CHIP;100OHM,5%,1/10W,DA,TP,2012	
....4	RP553	2007-000290	R-CHIP;100OHM,5%,1/10W,DA,TP,2012	
....4	RP554	2007-000290	R-CHIP;100OHM,5%,1/10W,DA,TP,2012	
....4	RP555	2007-000582	R-CHIP;22KOHM,1%,1/10W,DA,TP,2012	
....4	RP556	2007-000290	R-CHIP;100OHM,5%,1/10W,DA,TP,2012	
....4	RP560	2007-000468	R-CHIP;1KOHM,5%,1/10W,DA,TP,2012	
....4	RP562	2007-000468	R-CHIP;1KOHM,5%,1/10W,DA,TP,2012	
....4	RP565	2007-000029	R-CHIP;0OHM,5%,1/10W,DA,TP,2012	
....4	RP566	2007-000029	R-CHIP;0OHM,5%,1/10W,DA,TP,2012	
....4	RP567	2007-000029	R-CHIP;0OHM,5%,1/10W,DA,TP,2012	

Level	Loc. No.	Code No.	Description ; Specification	Remark
....4	RP568	2007-000029	R-CHIP;0OHM,5%,1/10W,DA,TP,2012	
....4	RP569	2007-000029	R-CHIP;0OHM,5%,1/10W,DA,TP,2012	
....4	RP570	2007-000300	R-CHIP;10KOHM,5%,1/10W,DA,TP,2012	
....4	RP571	2007-000290	R-CHIP;100OHM,5%,1/10W,DA,TP,2012	
....4	RP601	2007-000290	R-CHIP;100OHM,5%,1/10W,DA,TP,2012	
....4	RP602	2007-000290	R-CHIP;100OHM,5%,1/10W,DA,TP,2012	
....4	RP603	2007-001208	R-CHIP;82KOHM,5%,1/10W,DA,TP,2012	
....4	RP604	2007-000947	R-CHIP;47OHM,5%,1/10W,DA,TP,2012	
....4	RP605	2007-000518	R-CHIP;2.7KOHM,5%,1/10W,DA,TP,2012	
....4	RP606	2007-000518	R-CHIP;2.7KOHM,5%,1/10W,DA,TP,2012	
....4	RP609	2007-000872	R-CHIP;4.7KOHM,5%,1/10W,DA,TP,2012	
....4	RP611	2007-000468	R-CHIP;1KOHM,5%,1/10W,DA,TP,2012	
....4	RP613	2007-000941	R-CHIP;47KOHM,5%,1/10W,DA,TP,2012	
....4	RP614	2007-000001	R-CHIP;68KOHM,5%,1/10W,DA,TP,2012	
....4	RP619	2007-000468	R-CHIP;1KOHM,5%,1/10W,DA,TP,2012	
....4	RP620	2007-000947	R-CHIP;47OHM,5%,1/10W,DA,TP,2012	
....4	RP621	2007-000947	R-CHIP;47OHM,5%,1/10W,DA,TP,2012	
....4	RP622	2007-000468	R-CHIP;1KOHM,5%,1/10W,DA,TP,2012	
....4	RP623	2007-000822	R-CHIP;390OHM,5%,1/10W,DA,TP,2012	
....4	RP624	2007-000290	R-CHIP;100OHM,5%,1/10W,DA,TP,2012	
....4	RP625	2007-000872	R-CHIP;4.7KOHM,5%,1/10W,DA,TP,2012	
....4	RP626	2007-000931	R-CHIP;470OHM,5%,1/10W,DA,TP,2012	
....4	RP627	2007-000872	R-CHIP;4.7KOHM,5%,1/10W,DA,TP,2012	
....4	RP628	2007-000267	R-CHIP;1.8KOHM,5%,1/10W,DA,TP,2012	
....4	RP629	2007-000872	R-CHIP;4.7KOHM,5%,1/10W,DA,TP,2012	
....4	RP630	2007-000468	R-CHIP;1KOHM,5%,1/10W,DA,TP,2012	
....4	RP631	2007-000872	R-CHIP;4.7KOHM,5%,1/10W,DA,TP,2012	
....4	RP709	2007-000029	R-CHIP;0OHM,5%,1/10W,DA,TP,2012	
....4	RP719	2007-000029	R-CHIP;0OHM,5%,1/10W,DA,TP,2012	
....4	RP727	2007-000029	R-CHIP;0OHM,5%,1/10W,DA,TP,2012	
....4	RP735	2007-000029	R-CHIP;0OHM,5%,1/10W,DA,TP,2012	
....4	RP736	2007-000029	R-CHIP;0OHM,5%,1/10W,DA,TP,2012	
....4	RP737	2007-000029	R-CHIP;0OHM,5%,1/10W,DA,TP,2012	
....4	RP738	2007-000029	R-CHIP;0OHM,5%,1/10W,DA,TP,2012	
....4	RP901	2007-000290	R-CHIP;100OHM,5%,1/10W,DA,TP,2012	
....4	RP904	2007-000029	R-CHIP;0OHM,5%,1/10W,DA,TP,2012	
....4	RP907	2007-000290	R-CHIP;100OHM,5%,1/10W,DA,TP,2012	
....4	RP908	2007-000290	R-CHIP;100OHM,5%,1/10W,DA,TP,2012	
....4	RP912	2007-000290	R-CHIP;100OHM,5%,1/10W,DA,TP,2012	
....4	RP913	2007-000290	R-CHIP;100OHM,5%,1/10W,DA,TP,2012	
....4	RP914	2007-000290	R-CHIP;100OHM,5%,1/10W,DA,TP,2012	
....4	RP915	2007-000290	R-CHIP;100OHM,5%,1/10W,DA,TP,2012	
....4	RP916	2007-000290	R-CHIP;100OHM,5%,1/10W,DA,TP,2012	
....4	RP917	2007-000290	R-CHIP;100OHM,5%,1/10W,DA,TP,2012	
....4	RP918	2007-000290	R-CHIP;100OHM,5%,1/10W,DA,TP,2012	
....4	RP920	2007-000290	R-CHIP;100OHM,5%,1/10W,DA,TP,2012	
....4	RP921	2007-000290	R-CHIP;100OHM,5%,1/10W,DA,TP,2012	
....4	RP924	2007-000029	R-CHIP;0OHM,5%,1/10W,DA,TP,2012	
....4	RP925	2007-000290	R-CHIP;100OHM,5%,1/10W,DA,TP,2012	
....4	RP926	2007-000290	R-CHIP;100OHM,5%,1/10W,DA,TP,2012	
....4	RP927	2007-000290	R-CHIP;100OHM,5%,1/10W,DA,TP,2012	
....4	RP929	2007-000029	R-CHIP;0OHM,5%,1/10W,DA,TP,2012	
....4	RP931	2007-000029	R-CHIP;0OHM,5%,1/10W,DA,TP,2012	
....4	RP933	2007-000029	R-CHIP;0OHM,5%,1/10W,DA,TP,2012	
....4	RP935	2007-000029	R-CHIP;0OHM,5%,1/10W,DA,TP,2012	
....4	RP936	2007-000468	R-CHIP;1KOHM,5%,1/10W,DA,TP,2012	
....4	RP943	2007-000468	R-CHIP;1KOHM,5%,1/10W,DA,TP,2012	
....4	RP944	2007-000941	R-CHIP;47KOHM,5%,1/10W,DA,TP,2012	
....4	RP945	2007-000290	R-CHIP;100OHM,5%,1/10W,DA,TP,2012	
....4	RP980	2007-000029	R-CHIP;0OHM,5%,1/10W,DA,TP,2012	
....4	XP101	2801-003432	CRYSTAL-UNIT;20.25MHZ,30PPM,28-AAM,13PF,	
....4		AA41-00233B	PCB-PROSCAN;SVP-53J5P,FR-4,4L,B,1.6T,245	S.N.A
...3		AA63-40272A	SHIELD-CASE;-,SPTE,T0.5,-,CX724AHD	S.N.A
..2		AA95-00529A	ASSY-PCB,PIP;-,SP43J5HP,J51A,-,-,-	
...3	CNP01	3711-002709	CONNECTOR-HEADER;NOWALL,12P,1R,2.5MM,ANG	
...3	CNP03	3711-002709	CONNECTOR-HEADER;NOWALL,12P,1R,2.5MM,ANG	
⚠ ...3	ICP101	1204-000530	IC-PAL/NTSC DECODER;TDA9160A,DIP,32P,400	
⚠ ...3	ICP102	1204-000560	IC-DEMODULATOR;TDA9815,DIP,32P,400MIL,PL	
...3	RP126	2103-000665	VR-SEMI;20Kohm,25%,1/5W,SIDE	
...3	TP101	AA26-10004E	TRANS-IF;-,7MG,VIF,-,7mm,8pF,116.7MHz,S	
...3	ZP102	2904-000253	FILTER-SAW AV;38.9MHz,DIP10K,ST,18dB,B/G	
...3		AA99-20066Z	ASSY-PCB SUB,AUTO; AA95-00529A ,V	S.N.A
....4	CP101	2203-000221	C-CERAMIC,CHIP;100nF,20%,50V,Y5V,TP,3216	
....4	CP102	2401-000922	C-AL;22uF,20%,16V,GP,TP,5x5,5	
....4	CP103	2203-000429	C-CERAMIC,CHIP;0.018nF,5%,50V,NP0,TP,201	
....4	CP104	2203-000218	C-CERAMIC,CHIP;100nF,20%,50V,Y5V,TP,2012	

Level	Loc. No.	Code No.	Description ; Specification	Remark
....4	CP105	2203-000717	C-CERAMIC,CHIP;3.3nF,10%,50V,X7R,TP,3216	
....4	CP106	2203-000221	C-CERAMIC,CHIP;100nF,20%,50V,Y5V,TP,3216	
....4	CP107	2203-000221	C-CERAMIC,CHIP;100nF,20%,50V,Y5V,TP,3216	
....4	CP108	2203-000221	C-CERAMIC,CHIP;100nF,20%,50V,Y5V,TP,3216	
....4	CP109	2401-001840	C-AL;100uF,20%,16V,GP,TP,6.3x11,5	
....4	CP110	2203-000221	C-CERAMIC,CHIP;100nF,20%,50V,Y5V,TP,3216	
....4	CP111	2203-000716	C-CERAMIC,CHIP;3.3nF,10%,50V,X7R,TP,2012	
....4	CP112	2401-000660	C-AL;2.2uF,20%,50V,GP,TP,5x11,5	
....4	CP114	2203-000221	C-CERAMIC,CHIP;100nF,20%,50V,Y5V,TP,3216	
....4	CP115	2203-000221	C-CERAMIC,CHIP;100nF,20%,50V,Y5V,TP,3216	
....4	CP116	2203-000753	C-CERAMIC,CHIP;330nF,+80-20%,50V,Y5V,TP,	
....4	CP117	2401-002144	C-AL;47uF,20%,16V,GP,TP,5x11,5	
....4	CP118	2203-000221	C-CERAMIC,CHIP;100nF,20%,50V,Y5V,TP,3216	
....4	CP119	2201-000692	C-CERAMIC,DISC;0.008nF,0.5pF,50V,UJ,TP,4	
....4	CP120	2203-000578	C-CERAMIC,CHIP;220nF,20%,50V,Y5V,TP,3216	
....4	CP121	2401-000660	C-AL;2.2uF,20%,50V,GP,TP,5x11,5	
....4	CP123	2203-000260	C-CERAMIC,CHIP;10nF,10%,50V,X7R,TP,2012	
....4	CP124	2401-000660	C-AL;2.2uF,20%,50V,GP,TP,5x11,5	
....4	CP125	2203-000260	C-CERAMIC,CHIP;10nF,10%,50V,X7R,TP,2012	
....4	CP126	2401-001840	C-AL;100uF,20%,16V,GP,TP,6.3x11,5	
....4	CP127	2203-000221	C-CERAMIC,CHIP;100nF,20%,50V,Y5V,TP,3216	
....4	CP129	2203-000260	C-CERAMIC,CHIP;10nF,10%,50V,X7R,TP,2012	
....4	CP130	2203-000239	C-CERAMIC,CHIP;0.1nF,5%,50V,NP0,TP,2012	
....4	CP131	2201-000692	C-CERAMIC,DISC;0.008nF,0.5pF,50V,UJ,TP,4	
....4	CP132	2203-000239	C-CERAMIC,CHIP;0.1nF,5%,50V,NP0,TP,2012	
....4	CP133	2203-000221	C-CERAMIC,CHIP;100nF,20%,50V,Y5V,TP,3216	
....4	CP134	2401-001840	C-AL;100uF,20%,16V,GP,TP,6.3x11,5	
....4	CP135	2401-002144	C-AL;47uF,20%,16V,GP,TP,5x11,5	
....4	CP136	2203-000260	C-CERAMIC,CHIP;10nF,10%,50V,X7R,TP,2012	
....4	CP137	2203-000938	C-CERAMIC,CHIP;0.47nF,5%,50V,NP0,TP,2012	
....4	CP142	2401-000199	C-AL;1000uF,20%,6.3V,GP,TP,10x12.5,	
....4	CP143	2401-002144	C-AL;47uF,20%,16V,GP,TP,5x11,5	
....4	CP144	2203-000221	C-CERAMIC,CHIP;100nF,20%,50V,Y5V,TP,3216	
....4	CP145	2203-000221	C-CERAMIC,CHIP;100nF,20%,50V,Y5V,TP,3216	
....4	CP201	2203-000325	C-CERAMIC,CHIP;12nF,10%,50V,X7R,TP,3216,	
....4	CP203	2401-002144	C-AL;47uF,20%,16V,GP,TP,5x11,5	
....4	CP204	2203-000221	C-CERAMIC,CHIP;100nF,20%,50V,Y5V,TP,3216	
....4	CP205	2401-001840	C-AL;100uF,20%,16V,GP,TP,6.3x11,5	
....4	CP206	2203-000221	C-CERAMIC,CHIP;100nF,20%,50V,Y5V,TP,3216	
....4	CP207	2401-001840	C-AL;100uF,20%,16V,GP,TP,6.3x11,5	
....4	CP208	2203-000221	C-CERAMIC,CHIP;100nF,20%,50V,Y5V,TP,3216	
....4	CP209	2401-001914	C-AL;1uF,20%,50V,BP,TP,5x11,5	
....4	CP210	2401-001840	C-AL;100uF,20%,16V,GP,TP,6.3x11,5	
....4	CP211	2401-000603	C-AL;1uF,20%,50V,GP,TP,5x11,5	
....4	CP213	2401-000603	C-AL;1uF,20%,50V,GP,TP,5x11,5	
....4	CP214	2203-000578	C-CERAMIC,CHIP;220nF,20%,50V,Y5V,TP,3216	
....4	CP215	2401-000603	C-AL;1uF,20%,50V,GP,TP,5x11,5	
....4	CP216	2203-000221	C-CERAMIC,CHIP;100nF,20%,50V,Y5V,TP,3216	
....4	CP217	2203-000578	C-CERAMIC,CHIP;220nF,20%,50V,Y5V,TP,3216	
....4	CP218	2203-002085	C-CERAMIC,CHIP;56nF,10%,50V,X7R,TP,2012,	
....4	CP219	2203-000495	C-CERAMIC,CHIP;2.2nF,10%,50V,X7R,TP,2012	
....4	CP220	2203-000578	C-CERAMIC,CHIP;220nF,20%,50V,Y5V,TP,3216	
....4	CP221	2203-000221	C-CERAMIC,CHIP;100nF,20%,50V,Y5V,TP,3216	
....4	CP301	2401-001840	C-AL;100uF,20%,16V,GP,TP,6.3x11,5	
....4	CP302	2203-000221	C-CERAMIC,CHIP;100nF,20%,50V,Y5V,TP,3216	
....4	CP303	2401-001840	C-AL;100uF,20%,16V,GP,TP,6.3x11,5	
....4	CP304	2203-000221	C-CERAMIC,CHIP;100nF,20%,50V,Y5V,TP,3216	
....4	CP305	2203-000389	C-CERAMIC,CHIP;0.015nF,5%,50V,NP0,TP,201	
....4	CP306	2203-000389	C-CERAMIC,CHIP;0.015nF,5%,50V,NP0,TP,201	
....4	DP101	0401-000160	DIODE-SWITCHING;ISS314,30V,100mA,USC,TP	
....4	DP103	0403-000720	DIODE-ZENER;MTZJ9.1B,9.1V,8.57-9.01V,500	
....4	DP105	0401-000160	DIODE-SWITCHING;ISS314,30V,100mA,USC,TP	
....4	DP201	0403-000334	DIODE-ZENER;UZ2.7BSA,2.7V,2.54-2.75V,500	
⚠ 4	ICP103	AA13-20004A	IC-HYBRID;-,PAP102T,SIP,6P,PRE-AMP,TP	
⚠ 4	ICP105	1204-000635	IC-PICTURE PROCESS;SDA9189X,SOP,32P,350M	
⚠ 4	ICP201	1002-000206	IC-A/D CONVERTER;SDA9187-2X,6BIT,SOP,28P	
....4	LP102	2701-000219	INDUCTOR-AXIAL;820nH,10%,2.5x3.4mm	
....4	LP103	2701-000114	INDUCTOR-AXIAL;10uH,10%,2.5x3.4mm	
....4	LP104	2701-000114	INDUCTOR-AXIAL;10uH,10%,2.5x3.4mm	
....4	LP105	2701-000114	INDUCTOR-AXIAL;10uH,10%,2.5x3.4mm	
....4	LP201	2701-000197	INDUCTOR-AXIAL;5.6uH,10%,2.5x3.4mm	
....4	LP301	2701-000114	INDUCTOR-AXIAL;10uH,10%,2.5x3.4mm	
....4	PCB	AA41-11003A	PCB-PIP;SCT53A,2L,FR-4,330x245x1.6T,A6	S.N.A
....4	QP104	0501-000342	TR-SMALL SIGNAL;KSC1623-Y,NPN,200mW,SOT-	
....4	QP105	0501-000342	TR-SMALL SIGNAL;KSC1623-Y,NPN,200mW,SOT-	
....4	QP106	0501-000342	TR-SMALL SIGNAL;KSC1623-Y,NPN,200mW,SOT-	
....4	QP201	0501-000342	TR-SMALL SIGNAL;KSC1623-Y,NPN,200mW,SOT-	

Level	Loc. No.	Code No.	Description ; Specification	Remark
....4	QP202	0501-000342	TR-SMALL SIGNAL;KSC1623-Y,NPN,200mW,SOT-	
....4	QP203	0501-000280	TR-SMALL SIGNAL;KSA1182,PNP,150mW,SOT-23	
....4	QP204	0501-000342	TR-SMALL SIGNAL;KSC1623-Y,NPN,200mW,SOT-	
....4	QP205	0501-000342	TR-SMALL SIGNAL;KSC1623-Y,NPN,200mW,SOT-	
....4	QP206	0501-000342	TR-SMALL SIGNAL;KSC1623-Y,NPN,200mW,SOT-	
....4	QP302	0501-000342	TR-SMALL SIGNAL;KSC1623-Y,NPN,200mW,SOT-	
....4	QP303	0501-000280	TR-SMALL SIGNAL;KSA1182,PNP,150mW,SOT-23	
....4	QP304	0501-000280	TR-SMALL SIGNAL;KSA1182,PNP,150mW,SOT-23	
....4	QP305	0501-000280	TR-SMALL SIGNAL;KSA1182,PNP,150mW,SOT-23	
....4	RC129	2007-000586	R-CHIP;22KOHM,5%,1/10W,DA,TP,2012	
....4	RP101	2007-001208	R-CHIP;82KOHM,5%,1/10W,DA,TP,2012	
....4	RP104	2007-000468	R-CHIP;1KOHM,5%,1/10W,DA,TP,2012	
....4	RP105	2007-000328	R-CHIP;11KOHM,5%,1/10W,DA,TP,2012	
....4	RP106	2007-000774	R-CHIP;33KOHM,5%,1/10W,DA,TP,2012	
....4	RP107	2007-000409	R-CHIP;15KOHM,5%,1/10W,DA,TP,2012	
....4	RP108	2007-000493	R-CHIP;2.2KOHM,5%,1/10W,DA,TP,2012	
....4	RP109	2007-000830	R-CHIP;39KOHM,5%,1/10W,DA,TP,2012	
....4	RP110	2007-000300	R-CHIP;10KOHM,5%,1/10W,DA,TP,2012	
....4	RP111	2007-000872	R-CHIP;4.7KOHM,5%,1/10W,DA,TP,2012	
....4	RP112	2007-000931	R-CHIP;470OHM,5%,1/10W,DA,TP,2012	
....4	RP113	2007-000774	R-CHIP;33KOHM,5%,1/10W,DA,TP,2012	
....4	RP114	2007-000290	R-CHIP;100OHM,5%,1/10W,DA,TP,2012	
....4	RP115	2007-000290	R-CHIP;100OHM,5%,1/10W,DA,TP,2012	
....4	RP116	2007-000493	R-CHIP;2.2KOHM,5%,1/10W,DA,TP,2012	
....4	RP118	2001-000117	R-CARBON(S);68OHM,5%,1/2W,AA,TP,2.4X6.4M	
....4	RP119	2007-000282	R-CHIP;100KOHM,5%,1/10W,DA,TP,2012	
....4	RP122	2007-000300	R-CHIP;10KOHM,5%,1/10W,DA,TP,2012	
....4	RP123	2007-000941	R-CHIP;47KOHM,5%,1/10W,DA,TP,2012	
....4	RP124	2007-000941	R-CHIP;47KOHM,5%,1/10W,DA,TP,2012	
....4	RP125	2007-000401	R-CHIP;150OHM,5%,1/10W,DA,TP,2012	
....4	RP127	2007-000030	R-CHIP;560OHM,5%,1/10W,DA,TP,2012	
....4	RP128	2007-000941	R-CHIP;47KOHM,5%,1/10W,DA,TP,2012	
....4	RP130	2007-000872	R-CHIP;4.7KOHM,5%,1/10W,DA,TP,2012	
....4	RP131	2007-000586	R-CHIP;22KOHM,5%,1/10W,DA,TP,2012	
....4	RP132	2007-000468	R-CHIP;1KOHM,5%,1/10W,DA,TP,2012	
....4	RP135	2007-000468	R-CHIP;1KOHM,5%,1/10W,DA,TP,2012	
....4	RP136	2007-000872	R-CHIP;4.7KOHM,5%,1/10W,DA,TP,2012	
....4	RP137	2007-001039	R-CHIP;56KOHM,5%,1/10W,DA,TP,2012	
....4	RP138	2007-000586	R-CHIP;22KOHM,5%,1/10W,DA,TP,2012	
....4	RP140	2007-000029	R-CHIP;0OHM,5%,1/10W,DA,TP,2012	
....4	RP201	2007-001039	R-CHIP;56KOHM,5%,1/10W,DA,TP,2012	
....4	RP202	2007-000401	R-CHIP;150OHM,5%,1/10W,DA,TP,2012	
....4	RP203	2007-000703	R-CHIP;3.6KOHM,5%,1/10W,DA,TP,2012	
....4	RP204	2007-000593	R-CHIP;22OHM,5%,1/10W,DA,TP,2012	
....4	RP205	2007-000477	R-CHIP;1MOHM,5%,1/10W,DA,TP,2012	
....4	RP206	2007-000931	R-CHIP;470OHM,5%,1/10W,DA,TP,2012	
....4	RP207	2007-001009	R-CHIP;51KOHM,5%,1/10W,DA,TP,2012	
....4	RP208	2007-000774	R-CHIP;33KOHM,5%,1/10W,DA,TP,2012	
....4	RP209	2007-000401	R-CHIP;150OHM,5%,1/10W,DA,TP,2012	
....4	RP210	2007-000221	R-CHIP;1.2KOHM,5%,1/10W,DA,TP,2012	
....4	RP211	2007-001001	R-CHIP;510OHM,5%,1/10W,DA,TP,2012	
....4	RP212	2007-000931	R-CHIP;470OHM,5%,1/10W,DA,TP,2012	
....4	RP213	2007-000872	R-CHIP;4.7KOHM,5%,1/10W,DA,TP,2012	
....4	RP215	2007-000872	R-CHIP;4.7KOHM,5%,1/10W,DA,TP,2012	
....4	RP216	2007-000872	R-CHIP;4.7KOHM,5%,1/10W,DA,TP,2012	
....4	RP217	2007-000409	R-CHIP;15KOHM,5%,1/10W,DA,TP,2012	
....4	RP301	2007-000290	R-CHIP;100OHM,5%,1/10W,DA,TP,2012	
....4	RP303	2007-000468	R-CHIP;1KOHM,5%,1/10W,DA,TP,2012	
....4	RP304	2007-000290	R-CHIP;100OHM,5%,1/10W,DA,TP,2012	
....4	RP307	2007-000518	R-CHIP;2.7KOHM,5%,1/10W,DA,TP,2012	
....4	RP308	2007-000401	R-CHIP;150OHM,5%,1/10W,DA,TP,2012	
....4	RP309	2007-000931	R-CHIP;470OHM,5%,1/10W,DA,TP,2012	
....4	RP310	2007-000931	R-CHIP;470OHM,5%,1/10W,DA,TP,2012	
....4	RP311	2007-000931	R-CHIP;470OHM,5%,1/10W,DA,TP,2012	
....4	RP312	2007-000300	R-CHIP;10KOHM,5%,1/10W,DA,TP,2012	
....4	RP313	2007-001155	R-CHIP;750OHM,5%,1/10W,DA,TP,2012	
....4	RP314	2007-001155	R-CHIP;750OHM,5%,1/10W,DA,TP,2012	
....4	RP315	2007-001155	R-CHIP;750OHM,5%,1/10W,DA,TP,2012	
....4	RP316	2001-001146	R-CARBON(S);4.7OHM,5%,1/2W,AA,TP,2.4X6.4	
....4	RP317	2001-001146	R-CARBON(S);4.7OHM,5%,1/2W,AA,TP,2.4X6.4	
....4	XP101	2801-000235	CRYSTAL-UNIT;3.579545MHz,40ppm,28-AAM,S,	
....4	XP102	2801-000274	CRYSTAL-UNIT;4.433619MHZ,30PPM,28-AAM,20	
....4	XP301	2802-000121	RESONATOR-CERAMIC;20.48MHz,0.5%,TP,10.0x	
...3		AA63-40013A	SHIELD-CASE;-,SPTE,T0.5,SCT51A,WZ74,-	S.N.A
...3		0202-000187	SOLDER-WIRE FLUX;-,RS60S,D1.2,63Sn/37Pb	S.N.A
..2		AA95-00644A	ASSY-PCB,TTX;-,SP43J5HF,J51A,-,-,ENG VER	
...3	CNT01	3711-002709	CONNECTOR-HEADER;NOWALL,12P,1R,2.5MM,ANG	

Level	Loc. No.	Code No.	Description ; Specification	Remark
...3	CNT02	3711-002707	CONNECTOR-HEADER;NOWALL,9P,1R,2.5mm,ANGL	
⚠ ...3	ICT01	AA13-00046A	IC-MCU;SDA545x-OTP 13B,OTP,ST,64K,-,D	
⚠ ...3	ICT02	1103-001197	IC-EEPROM;24C04-PC C,256X8Bit,DIP,8P,300	
⚠ ...3	ICT04	1001-000223	IC-VIDEO SWITCH;TEA5114A,-,DIP,16P,334MI	
...3	XT01	2801-000724	CRYSTAL-UNIT;6MHz,50ppm,28-AAM,20pF,40oh	
...3		AA99-20079Q	ASSY-PCB SUB,AUTO; AA99-30187G ,V	S.N.A
....4	CT01	2401-002009	C-AL;100uF,20%,16V,GP,TP,6.3x7,5	
....4	CT02	2203-000218	C-CERAMIC,CHIP;100nF,20%,50V,Y5V,TP,2012	
....4	CT03	2203-000218	C-CERAMIC,CHIP;100nF,20%,50V,Y5V,TP,2012	
....4	CT04	2203-000818	C-CERAMIC,CHIP;0.033nF,5%,50V,NP0,TP,201	
....4	CT05	2203-000818	C-CERAMIC,CHIP;0.033nF,5%,50V,NP0,TP,201	
....4	CT06	2401-000486	C-AL;10uF,20%,50V,GP,TP,6.3x7mm,5	
....4	CT07	2203-000802	C-CERAMIC,CHIP;33nF,10%,50V,X7R,TP,2012	
....4	CT08	2401-002009	C-AL;100uF,20%,16V,GP,TP,6.3x7,5	
....4	CT09	2203-000218	C-CERAMIC,CHIP;100nF,20%,50V,Y5V,TP,2012	
....4	CT10	2203-000260	C-CERAMIC,CHIP;10nF,10%,50V,X7R,TP,2012	
....4	CT12	2203-000802	C-CERAMIC,CHIP;33nF,10%,50V,X7R,TP,2012	
....4	CT13	2401-002009	C-AL;100uF,20%,16V,GP,TP,6.3x7,5	
....4	CT14	2203-000218	C-CERAMIC,CHIP;100nF,20%,50V,Y5V,TP,2012	
....4	CT15	2203-000575	C-CERAMIC,CHIP;220NF,10%,25V,X7R,TP,2012	
....4	CT16	2203-000575	C-CERAMIC,CHIP;220NF,10%,25V,X7R,TP,2012	
....4	CT17	2203-000575	C-CERAMIC,CHIP;220NF,10%,25V,X7R,TP,2012	
....4	CT18	2203-000575	C-CERAMIC,CHIP;220NF,10%,25V,X7R,TP,2012	
....4	CT19	2203-000575	C-CERAMIC,CHIP;220NF,10%,25V,X7R,TP,2012	
....4	CT20	2203-000575	C-CERAMIC,CHIP;220NF,10%,25V,X7R,TP,2012	
....4	CT21	2401-000302	C-AL;100uF,20%,25V,GP,TP,6.3x11,5	
....4	CT22	2203-000218	C-CERAMIC,CHIP;100nF,20%,50V,Y5V,TP,2012	
....4	CT23	2401-002009	C-AL;100uF,20%,16V,GP,TP,6.3x7,5	
....4	CT24	2203-000218	C-CERAMIC,CHIP;100nF,20%,50V,Y5V,TP,2012	
....4	DZT01	0403-001016	DIODE-ZENER;RLZ6.2B,6.2V,5.96-6.27V,400m	
....4	DZT02	0403-001117	DIODE-ZENER;RLZ12B,5%,500mW,LL-34,TP	
⚠ 4	ICT03	1203-000515	IC-VOL. DETECTOR;7042,TO-92,3P,177MIL,PL	
⚠ 4	ICT05	0801-000410	IC-CMOS LOGIC;74HC32,OR GATE,SOP,14P,150	
....4	JT03	2007-000029	R-CHIP;0OHM,5%,1/10W,DA,TP,2012	
....4	LT01	2702-001094	INDUCTOR-RADIAL;10uH,10%,6x4mm	
....4	LT02	2702-001094	INDUCTOR-RADIAL;10uH,10%,6x4mm	
....4	LT03	2702-001094	INDUCTOR-RADIAL;10uH,10%,6x4mm	
....4	LT04	2702-001094	INDUCTOR-RADIAL;10uH,10%,6x4mm	
....4	LT05	2702-001094	INDUCTOR-RADIAL;10uH,10%,6x4mm	
....4	PCB	AA41-00276A	PCB-TTX;SP43J5MF,FR-4,2L,A,1.6T,180x24	S.N.A
....4	RT01	2007-000290	R-CHIP;100OHM,5%,1/10W,DA,TP,2012	
....4	RT02	2007-000290	R-CHIP;100OHM,5%,1/10W,DA,TP,2012	
....4	RT03	2007-000290	R-CHIP;100OHM,5%,1/10W,DA,TP,2012	
....4	RT04	2007-000300	R-CHIP;10KOHM,5%,1/10W,DA,TP,2012	
....4	RT05	2007-000300	R-CHIP;10KOHM,5%,1/10W,DA,TP,2012	
....4	RT06	2007-000300	R-CHIP;10KOHM,5%,1/10W,DA,TP,2012	
....4	RT07	2007-000872	R-CHIP;4.7KOHM,5%,1/10W,DA,TP,2012	
....4	RT08	2007-000872	R-CHIP;4.7KOHM,5%,1/10W,DA,TP,2012	
....4	RT09	2007-000872	R-CHIP;4.7KOHM,5%,1/10W,DA,TP,2012	
....4	RT10	2007-000300	R-CHIP;10KOHM,5%,1/10W,DA,TP,2012	
....4	RT11	2007-000300	R-CHIP;10KOHM,5%,1/10W,DA,TP,2012	
....4	RT12	2007-000941	R-CHIP;47KOHM,5%,1/10W,DA,TP,2012	
....4	RT13	2007-000518	R-CHIP;2.7KOHM,5%,1/10W,DA,TP,2012	
....4	RT14	2007-000653	R-CHIP;27KOHM,5%,1/10W,DA,TP,2012	
....4	RT15	2007-000477	R-CHIP;1MOHM,5%,1/10W,DA,TP,2012	
....4	RT16	2007-000290	R-CHIP;100OHM,5%,1/10W,DA,TP,2012	
....4	RT18	2007-000300	R-CHIP;10KOHM,5%,1/10W,DA,TP,2012	
....4	RT22	2007-000300	R-CHIP;10KOHM,5%,1/10W,DA,TP,2012	
....4	RT26	2007-000290	R-CHIP;100OHM,5%,1/10W,DA,TP,2012	
....4	RT27	2007-000290	R-CHIP;100OHM,5%,1/10W,DA,TP,2012	
....4	RT28	2007-000290	R-CHIP;100OHM,5%,1/10W,DA,TP,2012	
....4	RT29	2007-000290	R-CHIP;100OHM,5%,1/10W,DA,TP,2012	
....4	RT30	2007-000290	R-CHIP;100OHM,5%,1/10W,DA,TP,2012	
....4	RT31	2007-000572	R-CHIP;220OHM,5%,1/10W,DA,TP,2012	
....4	RT32	2007-000728	R-CHIP;300OHM,5%,1/10W,DA,TP,2012	
....4	RT33	2007-000572	R-CHIP;220OHM,5%,1/10W,DA,TP,2012	
....4	RT34	2007-000728	R-CHIP;300OHM,5%,1/10W,DA,TP,2012	
....4	RT35	2007-000572	R-CHIP;220OHM,5%,1/10W,DA,TP,2012	
....4	RT36	2007-000728	R-CHIP;300OHM,5%,1/10W,DA,TP,2012	
...3		0202-000187	SOLDER-WIRE FLUX;-,RS60S,D1.2,63Sn/37Pb	S.N.A
...3		0202-001004	SOLDER-CREAM;SQ-2030M SZH-1,S63A,D0.04,6	S.N.A
...3		AA63-40014A	SHIELD-CASE,T;-,SPTE,T0.5,SCT51A,-	S.N.A
..2		AA99-30200U	ASSY-PCB ROBOT; AA94-03113M ,ER	S.N.A
...3	CS810	2201-000446	C-CERAMIC,DISC;3.3nF,20%,400V,Y5U,TP,15x	
...3	CS811	2201-000446	C-CERAMIC,DISC;3.3nF,20%,400V,Y5U,TP,15x	
...3	FI101	2904-000253	FILTER-SAW AV;38.9MHz,DIP10K,ST,18dB,B/G	

Level	Loc. No.	Code No.	Description ; Specification	Remark
...3	FI102	2904-001010	FILTER-SAW AV;32.9~33.4MHz,SIP5P,ST,14.4	
...3	H002	AA40-10006T	TUNER-F/S;TECC2849PG29A(S),PAL-B/G,TR,18	
⚠ ...3	IC501	AA96-00111L	ASSY-H/S;-,-,AA62-30013L,KA78R12,-	
....4		1203-000165	IC-POSI.ADJUST REG.;78R12,TO-220,3P,-,-,	
....4		6003-000333	SCREW-TAPTITE;RH,+,2S,M3,L10,ZPC(YEL),SW	S.N.A
....4		AA62-30013L	HEATSINK-ES;-,-,-,-,44/22,-,WHT,-,-,-,-	S.N.A
⚠ ...3	IC807	AA96-50147A	ASSY-H/S;-,TR,AA62-30012B,KA7805A,-	S.N.A
....4		1203-000274	IC-POSI.FIXED REG.;7805,TO-220,3P,-,PLAS	
....4		6003-000333	SCREW-TAPTITE;RH,+,2S,M3,L10,ZPC(YEL),SW	S.N.A
....4		AA62-30012B	HEAT SINK-ES;-,A6063 EXTR,-,-,45(16) T02	S.N.A
⚠ ...3	IC901	AA09-00093A	IC MICOM;Z9035612PSC-R50P3,SP43J5HF,52P	
⚠ ...3	IC902	1103-001106	IC-EEPROM;C81DC,1028x8Bit,DIP,8P,300MIL,	
⚠ ...3	ICS801	AA13-00024A	IC-HYBRID;-,TNY253P,-,8PIN,-,-	
⚠ ...3	ICS802	0604-001032	PHOTO-COUPLER;TR,170-260%,300mW,DIP-4,ST	
...3		AA99-10195V	ASSY-PCB MAIN,AUTO; AA99-30200U ,V	S.N.A
....4	C103	2201-000119	C-CERAMIC,DISC;100nF,+80-20%,50V,Y5V,TP,	
....4	C104	2401-001840	C-AL;100uF,20%,16V,GP,TP,6.3x11,5	
....4	C105	2401-000302	C-AL;100uF,20%,25V,GP,TP,6.3x11,5	
....4	C107	2305-000665	C-FILM,MPEF;100nF,5%,63V,TP,7.5x4.0x5.0m	
....4	C109	2201-000119	C-CERAMIC,DISC;100nF,+80-20%,50V,Y5V,TP,	
....4	C110	2401-001840	C-AL;100uF,20%,16V,GP,TP,6.3x11,5	
....4	C119	2201-000119	C-CERAMIC,DISC;100nF,+80-20%,50V,Y5V,TP,	
....4	C121	2305-000665	C-FILM,MPEF;100nF,5%,63V,TP,7.5x4.0x5.0m	
....4	C125	2401-000603	C-AL;1uF,20%,50V,GP,TP,5x11,5	
....4	C126	2201-000119	C-CERAMIC,DISC;100nF,+80-20%,50V,Y5V,TP,	
....4	C130	2201-000119	C-CERAMIC,DISC;100nF,+80-20%,50V,Y5V,TP,	
....4	C131	2305-000665	C-FILM,MPEF;100nF,5%,63V,TP,7.5x4.0x5.0m	
....4	C132	2305-000665	C-FILM,MPEF;100nF,5%,63V,TP,7.5x4.0x5.0m	
....4	C133	2401-001363	C-AL;470uF,20%,16V,GP,TP,10x12.5,5	
....4	C134	2401-002273	C-AL;220uF,20%,25V,HR,TP,10x20mm,5m	
....4	C135	2401-000287	C-AL;100uF,20%,16V,WT,TP,6.3x11,5	
....4	C136	2401-000027	C-AL;4.7uF,20%,50V,GP,TP,5x11,5	
....4	C137	2401-002212	C-AL;10uF,20%,25V,WT,TP,5x11,5	
....4	C138	2305-000665	C-FILM,MPEF;100nF,5%,63V,TP,7.5x4.0x5.0m	
....4	C139	2201-000180	C-CERAMIC,DISC;10nF,10%,50V,Y5V,TP,7x3,5	
....4	C140	2201-000292	C-CERAMIC,DISC;1nF,10%,50V,Y5P,TP,5x3.5,	
....4	C141	2201-000292	C-CERAMIC,DISC;1nF,10%,50V,Y5P,TP,5x3.5,	
....4	C142	2305-000289	C-FILM,MPEF;220nF,5%,63V,TP,-,5mm	
....4	C143	2401-000667	C-AL;2.2uF,20%,50V,WT,TP,5x11,5	
....4	C144	2201-000180	C-CERAMIC,DISC;10nF,10%,50V,Y5V,TP,7x3,5	
....4	C145	2305-000665	C-FILM,MPEF;100nF,5%,63V,TP,7.5x4.0x5.0m	
....4	C146	2305-000665	C-FILM,MPEF;100nF,5%,63V,TP,7.5x4.0x5.0m	
....4	C147	2401-000660	C-AL;2.2uF,20%,50V,GP,TP,5x11,5	
....4	C148	2305-000665	C-FILM,MPEF;100nF,5%,63V,TP,7.5x4.0x5.0m	
....4	C149	2401-000947	C-AL;22uF,20%,35V,GP,TP,5x11,5	
....4	C180	2401-002300	C-AL;47uF,20%,50V,GP,TP,6.3x11,5	
....4	C185	2401-001363	C-AL;470uF,20%,16V,GP,TP,10x12.5,5	
....4	C191	2401-002619	C-AL;47uF,20%,25V,GP,TP,5x11,5	
....4	C501	2305-000665	C-FILM,MPEF;100nF,5%,63V,TP,7.5x4.0x5.0m	
....4	C502	2401-001397	C-AL;470uF,20%,25V,GP,TP,10x16,5	
....4	C503	2305-000665	C-FILM,MPEF;100nF,5%,63V,TP,7.5x4.0x5.0m	
....4	C504	2401-000832	C-AL;220uF,20%,25V,GP,TP,8x11.5,5	
....4	C505	2305-000665	C-FILM,MPEF;100nF,5%,63V,TP,7.5x4.0x5.0m	
....4	C506	2401-002594	C-AL;220uF,20%,16V,GP,TP,8x11.5,5	
....4	C507	2305-000665	C-FILM,MPEF;100nF,5%,63V,TP,7.5x4.0x5.0m	
....4	C508	2401-002286	C-AL;470uF,20%,16V,WT,TP,10x12.5,5	
....4	C509	2305-000665	C-FILM,MPEF;100nF,5%,63V,TP,7.5x4.0x5.0m	
....4	C510	2401-000133	C-AL;1000uF,20%,16V,GP,TP,10x20,5	
....4	C511	2305-000665	C-FILM,MPEF;100nF,5%,63V,TP,7.5x4.0x5.0m	
....4	C512	2401-000689	C-AL;2200uF,20%,16V,GP,TP,13x25,5	
....4	C519	2305-000665	C-FILM,MPEF;100nF,5%,63V,TP,7.5x4.0x5.0m	
....4	C520	2401-001397	C-AL;470uF,20%,25V,GP,TP,10x16,5	
....4	C521	2305-000665	C-FILM,MPEF;100nF,5%,63V,TP,7.5x4.0x5.0m	
....4	C522	2401-002286	C-AL;470uF,20%,16V,WT,TP,10x12.5,5	
....4	C523	2201-000292	C-CERAMIC,DISC;1nF,10%,50V,Y5P,TP,5x3.5,	
....4	C537	2305-000665	C-FILM,MPEF;100nF,5%,63V,TP,7.5x4.0x5.0m	
....4	C538	2401-001840	C-AL;100uF,20%,16V,GP,TP,6.3x11,5	
....4	C539	2401-001840	C-AL;100uF,20%,16V,GP,TP,6.3x11,5	
....4	C540	2305-000665	C-FILM,MPEF;100nF,5%,63V,TP,7.5x4.0x5.0m	
....4	C543	2201-000144	C-CERAMIC,DISC;0.1nF,5%,50V,NP0,TP,8.5x3	
....4	C544	2401-002144	C-AL;47uF,20%,16V,GP,TP,5x11,5	
....4	C601	2401-002299	C-AL;4.7uF,20%,50V,GP,TP,5x7,5	
....4	C602	2401-002299	C-AL;4.7uF,20%,50V,GP,TP,5x7,5	
....4	C666	2305-000665	C-FILM,MPEF;100nF,5%,63V,TP,7.5x4.0x5.0m	
....4	C667	2401-000603	C-AL;1uF,20%,50V,GP,TP,5x11,5	
....4	C668	2401-000603	C-AL;1uF,20%,50V,GP,TP,5x11,5	

Level	Loc. No.	Code No.	Description ; Specification	Remark
....4	C669	2401-000962	C-AL;22uF,20%,50V,GP,TP,5x11,5	
....4	C670	2401-000603	C-AL;1uF,20%,50V,GP,TP,5x11,5	
....4	C671	2401-001537	C-AL;47uF,20%,25V,GP,TP,6.3x7mm,5mm	
....4	C676	2401-001192	C-AL;33uF,20%,50V,GP,TP,6.3x11,5	
....4	C686	2201-000411	C-CERAMIC,DISC;0.27nF,10%,50V,Y5P,TP,4x3	
....4	C687	2201-000411	C-CERAMIC,DISC;0.27nF,10%,50V,Y5P,TP,4x3	
....4	C688	2401-000192	C-AL;1000uF,20%,50V,GP,TP,16x25,7.5	
....4	C689	2305-000665	C-FILM,MPEF;100nF,5%,63V,TP,7.5x4.0x5.0m	
....4	C690	2305-000665	C-FILM,MPEF;100nF,5%,63V,TP,7.5x4.0x5.0m	
....4	C691	2401-000192	C-AL;1000uF,20%,50V,GP,TP,16x25,7.5	
....4	C701	2401-000027	C-AL;4.7uF,20%,50V,GP,TP,5x11,5	
....4	C801	2401-002300	C-AL;47uF,20%,50V,GP,TP,6.3x11,5	
....4	C901	2202-000796	C-CERAMIC,MLC-AXIAL;1NF,10%,50V,Y5P,TP,3	
....4	C905	2401-001496	C-AL;47uF,20%,16V,GP,TP,5x7,5	
....4	C906	2305-000149	C-FILM,MPEF;100nF,5%,100V,TP,12x12.5x6.5	
....4	C908	2201-000292	C-CERAMIC,DISC;1nF,10%,50V,Y5P,TP,5x3.5,	
....4	C909	2201-000292	C-CERAMIC,DISC;1nF,10%,50V,Y5P,TP,5x3.5,	
....4	C912	2201-000119	C-CERAMIC,DISC;100nF,+80-20%,50V,Y5V,TP,	
....4	C913	2201-000193	C-CERAMIC,DISC;0.01nF,0.25pF,50V,NP0,TP,	
....4	C914	2201-000573	C-CERAMIC,DISC;0.047nF,5%,50V,NP0,TP,5x3	
....4	C915	2201-000119	C-CERAMIC,DISC;100nF,+80-20%,50V,Y5V,TP,	
....4	C916	2401-002042	C-AL;220uF,20%,10V,GP,TP,6.3x11,5	
....4	C917	2401-002144	C-AL;47uF,20%,16V,GP,TP,5x11,5	
....4	C918	2201-000119	C-CERAMIC,DISC;100nF,+80-20%,50V,Y5V,TP,	
....4	C919	2401-000480	C-AL;10uF,20%,50V,GP,TP,5x11,5	
....4	C920	2201-000119	C-CERAMIC,DISC;100nF,+80-20%,50V,Y5V,TP,	
....4	C925	2201-000119	C-CERAMIC,DISC;100nF,+80-20%,50V,Y5V,TP,	
....4	C926	2401-000480	C-AL;10uF,20%,50V,GP,TP,5x11,5	
....4	C927	2202-000231	C-CERAMIC,MLC-AXIAL;330pF,10%,50V,Y5P,TP	
....4	C928	2202-000796	C-CERAMIC,MLC-AXIAL;1NF,10%,50V,Y5P,TP,3	
....4	CN003	3711-002642	CONNECTOR-HEADER;BOX,3P,1R,2.5MM,STRAIGH	
....4	CN402	3711-002642	CONNECTOR-HEADER;BOX,3P,1R,2.5MM,STRAIGH	
....4	CN403	3711-002642	CONNECTOR-HEADER;BOX,3P,1R,2.5MM,STRAIGH	
....4	CN404	3711-002642	CONNECTOR-HEADER;BOX,3P,1R,2.5MM,STRAIGH	
....4	CN601	3711-002643	CONNECTOR-HEADER;BOX,4P,1R,2.5MM,STRAIGH	
....4	CS801	2201-000332	C-CERAMIC,DISC;2.2nF,20%,250V,Y5U,TP,9x4	
....4	CS802	2201-000332	C-CERAMIC,DISC;2.2nF,20%,250V,Y5U,TP,9x4	
....4	CS804	2201-000119	C-CERAMIC,DISC;100nF,+80-20%,50V,Y5V,TP,	
....4	CS805	2401-002286	C-AL;470uF,20%,16V,WT,TP,10x12.5,5	
....4	CS807	2201-000119	C-CERAMIC,DISC;100nF,+80-20%,50V,Y5V,TP,	
....4	CS808	2401-002286	C-AL;470uF,20%,16V,WT,TP,10x12.5,5	
....4	CS809	2201-000556	C-CERAMIC,DISC;0.47nF,10%,500V,Y5P,TP,5.	
....4	CS812	2201-002076	C-CERAMIC,DISC;0.068nF,5%,1kV,SL,TP,8x4m	
....4	CZ144	2401-000480	C-AL;10uF,20%,50V,GP,TP,5x11,5	
....4	CZ146	2401-000832	C-AL;220uF,20%,25V,GP,TP,8x11.5,5	
....4	CZ147	2201-000193	C-CERAMIC,DISC;0.01nF,0.25pF,50V,NP0,TP,	
....4	CZ148	2201-000193	C-CERAMIC,DISC;0.01nF,0.25pF,50V,NP0,TP,	
....4	CZ149	2201-000516	C-CERAMIC,DISC;4.7nF,+100-0%,500V,Y5U,TP	
....4	CZ150	2201-000516	C-CERAMIC,DISC;4.7nF,+100-0%,500V,Y5U,TP	
....4	CZ151	2401-001513	C-AL;47uF,20%,16V,WT,TP,5x11,5	
....4	CZ152	2401-001157	C-AL;33uF,20%,160V,GP,TP,12.5x20,5	
....4	CZ153	2401-001513	C-AL;47uF,20%,16V,WT,TP,5x11,5	
....4	CZ155	2201-000604	C-CERAMIC,DISC;0.056nF,+100-0%,500V,SL,T	
....4	CZ167	2401-001220	C-AL;4.7uF,20%,160V,GP,TP,8x11.5,5	
....4	CZ167A	2401-001220	C-AL;4.7uF,20%,160V,GP,TP,8x11.5,5	
....4	D101	0401-001088	DIODE-SWITCHING;BAW76,50V,300mA,DO-35,TP	
....4	D102	0401-001088	DIODE-SWITCHING;BAW76,50V,300mA,DO-35,TP	
....4	D103	0401-001088	DIODE-SWITCHING;BAW76,50V,300mA,DO-35,TP	
....4	D501	0401-000005	DIODE-SWITCHING;1N4148,100V,200MA,DO-35,	
....4	D664	0402-000546	DIODE-RECTIFIER;TVR10G,400V,1.0A,DO-41,T	
....4	D665	0401-000005	DIODE-SWITCHING;1N4148,100V,200MA,DO-35,	
....4	D666	0401-000005	DIODE-SWITCHING;1N4148,100V,200MA,DO-35,	
....4	D667	0401-000005	DIODE-SWITCHING;1N4148,100V,200MA,DO-35,	
....4	D668	0401-000005	DIODE-SWITCHING;1N4148,100V,200MA,DO-35,	
....4	D669	0401-000005	DIODE-SWITCHING;1N4148,100V,200MA,DO-35,	
....4	D701	0401-000005	DIODE-SWITCHING;1N4148,100V,200MA,DO-35,	
....4	D702	0401-000005	DIODE-SWITCHING;1N4148,100V,200MA,DO-35,	
....4	D703	0401-000005	DIODE-SWITCHING;1N4148,100V,200MA,DO-35,	
....4	D901	0401-000005	DIODE-SWITCHING;1N4148,100V,200MA,DO-35,	
....4	D902	0401-000005	DIODE-SWITCHING;1N4148,100V,200MA,DO-35,	
....4	D903	0401-000005	DIODE-SWITCHING;1N4148,100V,200MA,DO-35,	
....4	D904	0401-000005	DIODE-SWITCHING;1N4148,100V,200MA,DO-35,	
....4	D905	0401-000005	DIODE-SWITCHING;1N4148,100V,200MA,DO-35,	
....4	D906	0401-000005	DIODE-SWITCHING;1N4148,100V,200MA,DO-35,	
....4	D907	0401-000005	DIODE-SWITCHING;1N4148,100V,200MA,DO-35,	
⚠ 4	DS802	1405-000152	VARISTOR;560V,2500A,14x8.5mm,TP	
⚠ 4	DS803	0403-001322	DIODE-ZENER;MTZJ8.2B,7.78-8.19V,500mW,DO	
⚠ 4	DS804	0403-001318	DIODE-ZENER;MTZJ4.3B,4.17-4.43V,500mW,DO	
⚠ 4	DS805	0402-000534	DIODE-RECTIFIER;RG10V,400V,1.2A,DO-201,T	
⚠ 4	DS806	1405-001030	VARISTOR;120V,2500A,14x8.5mm,TP	
⚠ 4	DS807	0402-000546	DIODE-RECTIFIER;TVR10G,400V,1.0A,DO-41,T	
⚠ 4	DS808	1405-000152	VARISTOR;560V,2500A,14x8.5mm,TP	
⚠ 4	DS809	0404-001056	DIODE-SCHOTTKY;RK16,60V,1.5A,DO-204AC,TP	
⚠ 4	DS810	1405-000152	VARISTOR;560V,2500A,14x8.5mm,TP	
....4	DZ116	0401-000005	DIODE-SWITCHING;1N4148,100V,200MA,DO-35,	
....4	DZ117	0401-000005	DIODE-SWITCHING;1N4148,100V,200MA,DO-35,	
....4	DZ118	0402-000546	DIODE-RECTIFIER;TVR10G,400V,1.0A,DO-41,T	
....4	DZ119	0401-000005	DIODE-SWITCHING;1N4148,100V,200MA,DO-35,	
....4	DZ120	0402-000546	DIODE-RECTIFIER;TVR10G,400V,1.0A,DO-41,T	
....4	DZ121	0402-000546	DIODE-RECTIFIER;TVR10G,400V,1.0A,DO-41,T	
....4	DZ501	0403-000508	DIODE-ZENER;MTZJ5.6B,5.6V,5.45-5.73V,500	
....4	DZ502	0403-000508	DIODE-ZENER;MTZJ5.6B,5.6V,5.45-5.73V,500	
....4	DZ503	0403-000720	DIODE-ZENER;MTZJ9.1B,9.1V,8.57-9.01V,500	
....4	DZ504	0403-000720	DIODE-ZENER;MTZJ9.1B,9.1V,8.57-9.01V,500	
....4	DZ505	0403-000720	DIODE-ZENER;MTZJ9.1B,9.1V,8.57-9.01V,500	
....4	DZ506	0403-000508	DIODE-ZENER;MTZJ5.6B,5.6V,5.45-5.73V,500	
....4	DZ507	0403-000510	DIODE-ZENER;MTZJ6.2B,6.2V,5.96-6.27V,500	
....4	DZ508	0403-000510	DIODE-ZENER;MTZJ6.2B,6.2V,5.96-6.27V,500	
....4	DZ665	0403-001039	DIODE-ZENER;MA2560,56V,52-60V,1W,DO-41,T	
....4	DZ666	0403-001325	DIODE-ZENER;MTZJ15C,14.35-15.09V,500mW,D	
....4	DZ667	0403-001319	DIODE-ZENER;MTZJ4.7C,4.68-4.93V,500mW,DO	
....4	DZ701	0403-001140	DIODE-ZENER;RD10ESAB-T4,10V,9.19-10.30V,	
....4	DZ801	0403-000700	DIODE-ZENER;TZP33A,33V,31-35V,1W,DO-41,T	
....4	DZ901	0403-000508	DIODE-ZENER;MTZJ5.6B,5.6V,5.45-5.73V,500	
....4	DZ902	0403-000508	DIODE-ZENER;MTZJ5.6B,5.6V,5.45-5.73V,500	
....4	DZ903	0403-000508	DIODE-ZENER;MTZJ5.6B,5.6V,5.45-5.73V,500	
....4	DZ904	0403-000508	DIODE-ZENER;MTZJ5.6B,5.6V,5.45-5.73V,500	
....4	DZ905	0403-000510	DIODE-ZENER;MTZJ6.2B,6.2V,5.96-6.27V,500	
....4	DZ906	0403-000510	DIODE-ZENER;MTZJ6.2B,6.2V,5.96-6.27V,500	
....4	DZ907	0403-000510	DIODE-ZENER;MTZJ6.2B,6.2V,5.96-6.27V,500	
....4	DZ911	0403-000510	DIODE-ZENER;MTZJ6.2B,6.2V,5.96-6.27V,500	
....4	DZ912	0403-000508	DIODE-ZENER;MTZJ5.6B,5.6V,5.45-5.73V,500	
....4	DZ914	0403-000508	DIODE-ZENER;MTZJ5.6B,5.6V,5.45-5.73V,500	
....4	DZ915	0403-000508	DIODE-ZENER;MTZJ5.6B,5.6V,5.45-5.73V,500	
....4	F901	2901-000297	FILTER-EMI ON BOARD;-,3A,-,-,3.5x5,TP,-	
....4	FI103	2903-000181	FILTER-CERAMIC;BR,5.5MHz,-,-,-,TP,TPS5.5	
....4	FI104	2903-000129	FILTER-CERAMIC;BR,4.5MHz,-,-,-,TP,-	
⚠ 4	IC506	1203-000293	IC-POSI.FIXED REG.;7808,TO-220,3P,-PLAS	
⚠ 4	IC904	1203-000515	IC-VOL. DETECTOR;7042,TO-92,3P,177MIL,PL	
....4	L101	2701-000115	INDUCTOR-AXIAL;10uH,10%,3x7mm	
....4	L103	2701-000115	INDUCTOR-AXIAL;10uH,10%,3x7mm	
....4	L106	2701-000115	INDUCTOR-AXIAL;10uH,10%,3x7mm	
....4	L107	2701-000115	INDUCTOR-AXIAL;10uH,10%,3x7mm	
....4	L108	2701-000115	INDUCTOR-AXIAL;10uH,10%,3x7mm	
....4	L109	2701-000101	INDUCTOR-AXIAL;1.2uH,10%,2.5x3.4mm	
....4	L110	2701-000115	INDUCTOR-AXIAL;10uH,10%,3x7mm	
....4	L111	2701-000120	INDUCTOR-AXIAL;12uH,10%,2.5x3.4mm	
....4	L112	2701-000299	INDUCTOR-AXIAL;13UH,10%,2.5X3.4MM	
....4	L113	AA26-10006G	TRANS-IF;-,7mG,VIF,-,7mm,8pF,77.8MHz,ST	
....4	L114	2701-000114	INDUCTOR-AXIAL;10uH,10%,2.5x3.4mm	
....4	L115	2701-000114	INDUCTOR-AXIAL;10uH,10%,2.5x3.4mm	
....4	L116	2701-000114	INDUCTOR-AXIAL;10uH,10%,2.5x3.4mm	
....4	L117	2701-000114	INDUCTOR-AXIAL;10uH,10%,2.5x3.4mm	
....4	L118	2701-000115	INDUCTOR-AXIAL;10uH,10%,3x7mm	
....4	L501	2701-000114	INDUCTOR-AXIAL;10uH,10%,2.5x3.4mm	
....4	L502	2701-000114	INDUCTOR-AXIAL;10uH,10%,2.5x3.4mm	
....4	L503	2701-000114	INDUCTOR-AXIAL;10uH,10%,2.5x3.4mm	
....4	L504	2701-000114	INDUCTOR-AXIAL;10uH,10%,2.5x3.4mm	
....4	L505	2901-000297	FILTER-EMI ON BOARD;-,3A,-,-,3.5x5,TP,-	
....4	L506	3301-000287	CORE-FERRITE BEAD;AA,3.5x1.0x6.0mm,1500,	
....4	L507	3301-000287	CORE-FERRITE BEAD;AA,3.5x1.0x6.0mm,1500,	
....4	L514	3301-000287	CORE-FERRITE BEAD;AA,3.5x1.0x6.0mm,1500,	
....4	L515	3301-000287	CORE-FERRITE BEAD;AA,3.5x1.0x6.0mm,1500,	
....4	L601	2701-000114	INDUCTOR-AXIAL;10uH,10%,2.5x3.4mm	
....4	L602	2701-000114	INDUCTOR-AXIAL;10uH,10%,2.5x3.4mm	
....4	L604	3301-000287	CORE-FERRITE BEAD;AA,3.5x1.0x6.0mm,1500,	
....4	L901	2901-000297	FILTER-EMI ON BOARD;-,3A,-,-,3.5x5,TP,-	
....4	L902	2701-000115	INDUCTOR-AXIAL;10uH,10%,3x7mm	
....4	L903	2701-001040	INDUCTOR-AXIAL;10uH,10%,4.5x14mm	
....4	L907	3301-000287	CORE-FERRITE BEAD;AA,3.5x1.0x6.0mm,1500,	
....4	L909	2701-000114	INDUCTOR-AXIAL;10uH,10%,2.5x3.4mm	
....4	L910	2701-000114	INDUCTOR-AXIAL;10uH,10%,2.5x3.4mm	
....4	L911	2701-000114	INDUCTOR-AXIAL;10uH,10%,2.5x3.4mm	
....4	L912	2701-000114	INDUCTOR-AXIAL;10uH,10%,2.5x3.4mm	

Level	Loc. No.	Code No.	Description ; Specification	Remark
....4	LD901	2701-000115	INDUCTOR-AXIAL;10uH,10%,3x7mm	
....4	LS801	2901-000297	FILTER-EMI ON BOARD;-,3A,-,-,-,3.5x5,TP,-	
....4	LS802	2901-000297	FILTER-EMI ON BOARD;-,3A,-,-,-,3.5x5,TP,-	
....4	LS803	3301-000287	CORE-FERRITE BEAD;AA,3.5x1.0x6.0mm,1500,	
....4	LZ112	2701-000002	INDUCTOR-AXIAL;100uH,10%,4.2x9.8mm	
....4	PCB	AA41-00075A	PCB-MAIN;J51A,1L,FR-1,330X245X1.6T,1A,-	S.N.A
....4	Q101	0504-000137	TR-DIGITAL;KSR1202,NPN,300mW,10K/10K,TO-	
....4	Q102	0504-000123	TR-DIGITAL;KSR1010,NPN,300mW,10K,TO-92,T	
....4	Q103	0501-000245	TR-SMALL SIGNAL;BC548C,NPN,500mW,TO-92,T	
....4	Q104	0504-000123	TR-DIGITAL;KSR1010,NPN,300mW,10K,TO-92,T	
....4	Q105	0501-000389	TR-SMALL SIGNAL;KSC815,NPN,400mW,TO-92,T	
....4	Q106	0504-000150	TR-DIGITAL;KSR2010,PNP,300mW,10K,TO-92,T	
....4	Q107	0504-000123	TR-DIGITAL;KSR1010,NPN,300mW,10K,TO-92,T	
....4	Q665	0501-000389	TR-SMALL SIGNAL;KSC815,NPN,400mW,TO-92,T	
....4	Q666	0501-000389	TR-SMALL SIGNAL;KSC815,NPN,400mW,TO-92,T	
....4	Q667	0501-000389	TR-SMALL SIGNAL;KSC815,NPN,400mW,TO-92,T	
....4	Q701	0501-000389	TR-SMALL SIGNAL;KSC815,NPN,400mW,TO-92,T	
....4	Q702	0501-000389	TR-SMALL SIGNAL;KSC815,NPN,400mW,TO-92,T	
....4	Q901	0501-000389	TR-SMALL SIGNAL;KSC815,NPN,400mW,TO-92,T	
....4	Q902	0501-000389	TR-SMALL SIGNAL;KSC815,NPN,400mW,TO-92,T	
....4	Q903	0501-000389	TR-SMALL SIGNAL;KSC815,NPN,400mW,TO-92,T	
....4	Q909	0501-000283	TR-SMALL SIGNAL;KSA539,PNP,400mW,TO-92,T	
....4	Q910	0501-000389	TR-SMALL SIGNAL;KSC815,NPN,400mW,TO-92,T	
....4	QS801	0501-000369	TR-SMALL SIGNAL;KSC2331-Y,NPN,1W,TO-92L,	
....4	QZ103	0501-000389	TR-SMALL SIGNAL;KSC815,NPN,400mW,TO-92,T	
....4	QZ104	0501-000389	TR-SMALL SIGNAL;KSC815,NPN,400mW,TO-92,T	
....4	QZ105	0501-000389	TR-SMALL SIGNAL;KSC815,NPN,400mW,TO-92,T	
....4	QZ106	0501-000283	TR-SMALL SIGNAL;KSA539,PNP,400mW,TO-92,T	
....4	R123	2001-000429	R-CARBON;1KOHM,5%,1/8W,AA,TP,1.8X3.2MM	
....4	R131	2001-000739	R-CARBON;4.7MOHM,5%,1/8W,AA,TP,1.8X3.2M	
....4	R132	2001-000739	R-CARBON;4.7MOHM,5%,1/8W,AA,TP,1.8X3.2M	
....4	R142	2001-000281	R-CARBON;100OHM,5%,1/8W,AA,TP,1.8X3.2MM	
....4	R145	2001-000890	R-CARBON;6.8KOHM,5%,1/8W,AA,TP,1.8X3.2M	
....4	R146	2001-000362	R-CARBON;150OHM,5%,1/8W,AA,TP,1.8X3.2MM	
....4	R148	2001-000290	R-CARBON;10KOHM,5%,1/8W,AA,TP,1.8X3.2MM	
....4	R149	2001-000331	R-CARBON;12KOHM,5%,1/8W,AA,TP,1.8X3.2MM	
....4	R150	2001-000290	R-CARBON;10KOHM,5%,1/8W,AA,TP,1.8X3.2MM	
....4	R151	2001-000313	R-CARBON;11KOHM,5%,1/8W,AA,TP,1.8X3.2MM	
....4	R152	2001-000449	R-CARBON;2.2KOHM,5%,1/8W,AA,TP,1.8X3.2M	
....4	R153	2001-000449	R-CARBON;2.2KOHM,5%,1/8W,AA,TP,1.8X3.2M	
....4	R154	2001-000449	R-CARBON;2.2KOHM,5%,1/8W,AA,TP,1.8X3.2M	
....4	R155	2001-000522	R-CARBON;22KOHM,5%,1/8W,AA,TP,1.8X3.2MM	
....4	R156	2001-000241	R-CARBON;1.5KOHM,5%,1/8W,AA,TP,1.8X3.2M	
....4	R157	2001-000241	R-CARBON;1.5KOHM,5%,1/8W,AA,TP,1.8X3.2M	
....4	R158	2001-000857	R-CARBON;560OHM,5%,1/8W,AA,TP,1.8X3.2MM	
....4	R159	2001-000864	R-CARBON;56KOHM,5%,1/8W,AA,TP,1.8X3.2MM	
....4	R160	2001-000786	R-CARBON;47KOHM,5%,1/8W,AA,TP,1.8X3.2MM	
....4	R161	2001-000005	R-CARBON;390ohm,5%,1/8W,AA,TP,1.8x3.2mm	
....4	R162	2001-000969	R-CARBON;75OHM,5%,1/8W,AA,TP,1.8X3.2MM	
....4	R163	2001-000515	R-CARBON;220OHM,5%,1/8W,AA,TP,1.8X3.2MM	
....4	R164	2001-000490	R-CARBON;200OHM,5%,1/8W,AA,TP,1.8X3.2MM	
....4	R165	2001-000515	R-CARBON;220OHM,5%,1/8W,AA,TP,1.8X3.2MM	
....4	R166	2001-000429	R-CARBON;1KOHM,5%,1/8W,AA,TP,1.8X3.2MM	
....4	R167	2001-000522	R-CARBON;22KOHM,5%,1/8W,AA,TP,1.8X3.2MM	
....4	R168	2001-000522	R-CARBON;22KOHM,5%,1/8W,AA,TP,1.8X3.2MM	
....4	R169	2001-000734	R-CARBON;4.7KOHM,5%,1/8W,AA,TP,1.8X3.2M	
....4	R501	2001-000066	R-CARBON(S);10KOHM,5%,1/2W,AA,TP,2.4X6.4	
....4	R502	2001-000281	R-CARBON;100OHM,5%,1/8W,AA,TP,1.8X3.2MM	
....4	R503	2001-000281	R-CARBON;100OHM,5%,1/8W,AA,TP,1.8X3.2MM	
....4	R504	2001-000405	R-CARBON;180OHM,5%,1/8W,AA,TP,1.8X3.2MM	
....4	R509	2008-000266	R-FUSIBLE(S);1ohm,5%,2W,AF,TP,3.9x10mm	
....4	R510	2008-000266	R-FUSIBLE(S);1ohm,5%,2W,AF,TP,3.9x10mm	
....4	R511	2008-001116	R-FUSIBLE(S);0.68ohm,10%,2W,AG,TP,3.9x12	
....4	R512	2001-000003	R-CARBON;330ohm,5%,1/8W,AA,TP,1.8x3.2mm	
....4	R524	2001-000739	R-CARBON;4.7MOHM,5%,1/8W,AA,TP,1.8X3.2M	
....4	R525	2001-000739	R-CARBON;4.7MOHM,5%,1/8W,AA,TP,1.8X3.2M	
....4	R526	2001-000739	R-CARBON;4.7MOHM,5%,1/8W,AA,TP,1.8X3.2M	
....4	R531	2001-000739	R-CARBON;4.7MOHM,5%,1/8W,AA,TP,1.8X3.2M	
....4	R532	2001-000037	R-CARBON(S);330OHM,5%,1/2W,AA,TP,2.4X6.4	
....4	R533	2001-000739	R-CARBON;4.7MOHM,5%,1/8W,AA,TP,1.8X3.2M	
....4	R601	2001-000109	R-CARBON(S);470OHM,5%,1/2W,AA,TP,2.4X6.4	
....4	R602	2001-000605	R-CARBON;3.6KOHM,5%,1/8W,AA,TP,1.8X3.2M	
....4	R603	2001-000734	R-CARBON;4.7KOHM,5%,1/8W,AA,TP,1.8X3.2M	
....4	R661	2001-001093	R-CARBON(S);2.2KOHM,5%,1/2W,AA,TP,2.4X6.	
....4	R662	2001-001093	R-CARBON(S);2.2KOHM,5%,1/2W,AA,TP,2.4X6.	
....4	R665	2001-001188	R-CARBON(S);8.2KOHM,5%,1/2W,AA,TP,2.4X6.	
....4	R666	2001-001188	R-CARBON(S);8.2KOHM,5%,1/2W,AA,TP,2.4X6.	
....4	R668	2001-000028	R-CARBON(S);100OHM,5%,1/2W,AA,TP,2.4X6.4	
....4	R669	2001-001144	R-CARBON(S);4.7KOHM,5%,1/2W,AA,TP,2.4X6.	
....4	R670	2001-000085	R-CARBON(S);100KOHM,5%,1/2W,AA,TP,2.4X6.	
....4	R671	2001-000066	R-CARBON(S);10KOHM,5%,1/2W,AA,TP,2.4X6.4	
....4	R672	2001-000066	R-CARBON(S);10KOHM,5%,1/2W,AA,TP,2.4X6.4	
....4	R673	2001-000411	R-CARBON;18KOHM,5%,1/8W,AA,TP,1.8X3.2MM	
....4	R674	2001-000780	R-CARBON;470OHM,5%,1/8W,AA,TP,1.8X3.2MM	
....4	R675	2001-000066	R-CARBON(S);10KOHM,5%,1/2W,AA,TP,2.4X6.4	
....4	R676	2001-000812	R-CARBON;5.6KOHM,5%,1/8W,AA,TP,1.8X3.2M	
....4	R677	2001-000290	R-CARBON;10KOHM,5%,1/8W,AA,TP,1.8X3.2MM	
....4	R678	2001-000008	R-CARBON;15KOHM,5%,1/8W,AA,TP,1.8X3.2MM	
....4	R679	2001-001071	R-CARBON(S);12KOHM,5%,1/2W,AA,TP,2.4X6.4	
....4	R680	2001-001000	R-CARBON;82KOHM,5%,1/8W,AA,TP,1.8X3.2MM	
....4	R681	2001-001093	R-CARBON(S);2.2KOHM,5%,1/2W,AA,TP,2.4X6.	
....4	R682	2004-001897	R-METAL(S);43.2Kohm,1%,1/2W,AA,TP,2.5x6.	
....4	R683	2004-001897	R-METAL(S);43.2Kohm,1%,1/2W,AA,TP,2.5x6.	
....4	R684	2001-001093	R-CARBON(S);2.2KOHM,5%,1/2W,AA,TP,2.4X6.	
....4	R685	2004-001390	R-METAL(S);1Kohm,2%,1/2W,AA,TP,2.4x6.4mm	
....4	R686	2004-001390	R-METAL(S);1Kohm,2%,1/2W,AA,TP,2.4x6.4mm	
....4	R687	2001-001146	R-CARBON(S);4.7OHM,5%,1/2W,AA,TP,2.4X6.4	
....4	R689	2001-001146	R-CARBON(S);4.7OHM,5%,1/2W,AA,TP,2.4X6.4	
....4	R690	2001-000734	R-CARBON;4.7KOHM,5%,1/8W,AA,TP,1.8X3.2M	
....4	R701	2001-000786	R-CARBON;47KOHM,5%,1/8W,AA,TP,1.8X3.2MM	
....4	R702	2001-000290	R-CARBON;10KOHM,5%,1/8W,AA,TP,1.8X3.2MM	
....4	R703	2001-000290	R-CARBON;10KOHM,5%,1/8W,AA,TP,1.8X3.2MM	
....4	R704	2001-000290	R-CARBON;10KOHM,5%,1/8W,AA,TP,1.8X3.2MM	
....4	R801	2003-001098	R-METAL OXIDE(S);22Kohm,5%,3W,AA,TP,6x16	
....4	R901	2001-000734	R-CARBON;4.7KOHM,5%,1/8W,AA,TP,1.8X3.2M	
....4	R903	2001-000429	R-CARBON;1KOHM,5%,1/8W,AA,TP,1.8X3.2MM	
....4	R904	2001-000290	R-CARBON;10KOHM,5%,1/8W,AA,TP,1.8X3.2MM	
....4	R905	2001-000734	R-CARBON;4.7KOHM,5%,1/8W,AA,TP,1.8X3.2M	
....4	R906	2001-000429	R-CARBON;1KOHM,5%,1/8W,AA,TP,1.8X3.2MM	
....4	R907	2001-000429	R-CARBON;1KOHM,5%,1/8W,AA,TP,1.8X3.2MM	
....4	R908	2001-000281	R-CARBON;100OHM,5%,1/8W,AA,TP,1.8X3.2MM	
....4	R909	2001-000281	R-CARBON;100OHM,5%,1/8W,AA,TP,1.8X3.2MM	
....4	R910	2001-000281	R-CARBON;100OHM,5%,1/8W,AA,TP,1.8X3.2MM	
....4	R912	2001-000003	R-CARBON;330ohm,5%,1/8W,AA,TP,1.8x3.2mm	
....4	R914	2001-000281	R-CARBON;100OHM,5%,1/8W,AA,TP,1.8X3.2MM	
....4	R915	2001-000281	R-CARBON;100OHM,5%,1/8W,AA,TP,1.8X3.2MM	
....4	R916	2001-000472	R-CARBON;2.7KOHM,5%,1/8W,AA,TP,1.8X3.2M	
....4	R917	2001-000472	R-CARBON;2.7KOHM,5%,1/8W,AA,TP,1.8X3.2M	
....4	R918	2001-000832	R-CARBON;510OHM,5%,1/8W,AA,TP,1.8X3.2MM	
....4	R919	2001-000591	R-CARBON;3.3KOHM,5%,1/8W,AA,TP,1.8X3.2M	
....4	R921	2001-000812	R-CARBON;5.6KOHM,5%,1/8W,AA,TP,1.8X3.2M	
....4	R922	2001-000812	R-CARBON;5.6KOHM,5%,1/8W,AA,TP,1.8X3.2M	
....4	R923	2001-000786	R-CARBON;47KOHM,5%,1/8W,AA,TP,1.8X3.2MM	
....4	R924	2001-000786	R-CARBON;47KOHM,5%,1/8W,AA,TP,1.8X3.2MM	
....4	R925	2001-000241	R-CARBON;1.5KOHM,5%,1/8W,AA,TP,1.8X3.2M	
....4	R926	2001-000241	R-CARBON;1.5KOHM,5%,1/8W,AA,TP,1.8X3.2M	
....4	R930	2001-000734	R-CARBON;4.7KOHM,5%,1/8W,AA,TP,1.8X3.2M	
....4	R931	2001-000734	R-CARBON;4.7KOHM,5%,1/8W,AA,TP,1.8X3.2M	
....4	R932	2001-000734	R-CARBON;4.7KOHM,5%,1/8W,AA,TP,1.8X3.2M	
....4	R945	2001-000429	R-CARBON;1KOHM,5%,1/8W,AA,TP,1.8X3.2MM	
....4	R946	2001-000290	R-CARBON;10KOHM,5%,1/8W,AA,TP,1.8X3.2MM	
....4	R947	2001-000290	R-CARBON;10KOHM,5%,1/8W,AA,TP,1.8X3.2MM	
....4	R948	2001-000429	R-CARBON;1KOHM,5%,1/8W,AA,TP,1.8X3.2MM	
....4	R949	2001-000591	R-CARBON;3.3KOHM,5%,1/8W,AA,TP,1.8X3.2M	
....4	R950	2001-000429	R-CARBON;1KOHM,5%,1/8W,AA,TP,1.8X3.2MM	
....4	R951	2001-000591	R-CARBON;3.3KOHM,5%,1/8W,AA,TP,1.8X3.2M	
....4	R952	2001-000281	R-CARBON;100OHM,5%,1/8W,AA,TP,1.8X3.2MM	
....4	R953	2001-000734	R-CARBON;4.7KOHM,5%,1/8W,AA,TP,1.8X3.2M	
....4	R954	2001-000281	R-CARBON;100OHM,5%,1/8W,AA,TP,1.8X3.2MM	
....4	R955	2001-000734	R-CARBON;4.7KOHM,5%,1/8W,AA,TP,1.8X3.2M	
....4	R958	2001-000281	R-CARBON;100OHM,5%,1/8W,AA,TP,1.8X3.2MM	
....4	R959	2001-000281	R-CARBON;100OHM,5%,1/8W,AA,TP,1.8X3.2MM	
....4	R960	2001-000281	R-CARBON;100OHM,5%,1/8W,AA,TP,1.8X3.2MM	
....4	R961	2001-000734	R-CARBON;4.7KOHM,5%,1/8W,AA,TP,1.8X3.2M	
....4	R962	2001-000864	R-CARBON;56KOHM,5%,1/8W,AA,TP,1.8X3.2MM	
....4	R967	2001-000429	R-CARBON;1KOHM,5%,1/8W,AA,TP,1.8X3.2MM	
....4	R968	2001-000429	R-CARBON;1KOHM,5%,1/8W,AA,TP,1.8X3.2MM	
....4	R970	2001-000472	R-CARBON;2.7KOHM,5%,1/8W,AA,TP,1.8X3.2M	
....4	R971	2001-000780	R-CARBON;470OHM,5%,1/8W,AA,TP,1.8X3.2MM	
....4	R974	2001-000734	R-CARBON;4.7KOHM,5%,1/8W,AA,TP,1.8X3.2M	
....4	R977	2001-001062	R-CARBON(S);10MOHM,5%,1/2W,AA,TP,2.4X6.4	
....4	R979	2001-000281	R-CARBON;100OHM,5%,1/8W,AA,TP,1.8X3.2MM	

Level	Loc. No.	Code No.	Description ; Specification	Remark
....4	R980	2001-000290	R-CARBON;10KOHM,5%,1/8W,AA,TP,1.8X3.2MM	
....4	R981	2001-000577	R-CARBON;2KOHM,5%,1/8W,AA,TP,1.8X3.2MM	
....4	R982	2001-000577	R-CARBON;2KOHM,5%,1/8W,AA,TP,1.8X3.2MM	
....4	R983	2001-000577	R-CARBON;2KOHM,5%,1/8W,AA,TP,1.8X3.2MM	
....4	R984	2001-000429	R-CARBON;1KOHM,5%,1/8W,AA,TP,1.8X3.2MM	
....4	R985	2001-000786	R-CARBON;47KOHM,5%,1/8W,AA,TP,1.8X3.2MM	
....4	R986	2001-000429	R-CARBON;1KOHM,5%,1/8W,AA,TP,1.8X3.2MM	
....4	R987	2001-000780	R-CARBON;470OHM,5%,1/8W,AA,TP,1.8X3.2MM	
....4	R988	2001-000281	R-CARBON;100OHM,5%,1/8W,AA,TP,1.8X3.2MM	
....4	R989	2001-000281	R-CARBON;100OHM,5%,1/8W,AA,TP,1.8X3.2MM	
....4	R990	2001-000281	R-CARBON;100OHM,5%,1/8W,AA,TP,1.8X3.2MM	
....4	R991	2001-000281	R-CARBON;100OHM,5%,1/8W,AA,TP,1.8X3.2MM	
....4	R992	2001-000472	R-CARBON;2.7KOHM,5%,1/8W,AA,TP,1.8X3.2M	
....4	R993	2001-000281	R-CARBON;100OHM,5%,1/8W,AA,TP,1.8X3.2MM	
....4	R994	2001-000281	R-CARBON;100OHM,5%,1/8W,AA,TP,1.8X3.2MM	
....4	RD901	2001-000281	R-CARBON;100OHM,5%,1/8W,AA,TP,1.8X3.2MM	
....4	RD903	2001-000734	R-CARBON;4.7KOHM,5%,1/8W,AA,TP,1.8X3.2M	
....4	RF802	2008-000294	R-FUSIBLE(S);33ohm,5%,2W,AF,TP,3.9x10mm	
....4	RS801	2003-002194	R-METAL OXIDE(S);1.8Kohm,5%,1W,AF,TP,2.5	
....4	RS802	2001-001192	R-CARBON(S);820OHM,5%,1/2W,AA,TP,2.4X6.4	
....4	RS803	2001-001159	R-CARBON(S);510OHM,5%,1/2W,AA,TP,2.4X6.4	
....4	RS804	2001-001182	R-CARBON(S);7.5KOHM,5%,1/2W,AA,TP,2.4X6.	
....4	RS805	2001-001107	R-CARBON(S);220ohm,5%,1/2W,AA,TP,2.4x6.4	
....4	RS806	2001-001159	R-CARBON(S);510OHM,5%,1/2W,AA,TP,2.4X6.4	
....4	RS807	2001-000739	R-CARBON;4.7MOHM,5%,1/8W,AA,TP,1.8X3.2M	
....4	RZ153	2008-001086	R-FUSIBLE(S);3.3ohm,5%,2W,AG,TP,3.9x12mm	
....4	RZ154	2003-000532	R-METAL OXIDE(S);18ohm,5%,2W,AF,TP,4x12m	
....4	RZ156	2001-001159	R-CARBON(S);510OHM,5%,1/2W,AA,TP,2.4X6.4	
....4	RZ165	2001-000331	R-CARBON;12KOHM,5%,1/8W,AA,TP,1.8X3.2MM	
....4	RZ166	2001-000258	R-CARBON;1.8KOHM,5%,1/8W,AA,TP,1.8X3.2M	
....4	RZ167	2001-000258	R-CARBON;1.8KOHM,5%,1/8W,AA,TP,1.8X3.2M	
....4	RZ167A	2001-000554	R-CARBON;270OHM,5%,1/8W,AA,TP,1.8X3.2MM	
....4	RZ168	2003-002157	R-METAL OXIDE;220OHM,5%,2W,AG,TP,6X16MM	
....4	RZ169	2001-000019	R-CARBON(S);10OHM,5%,1/2W,AA,TP,2.4X6.4M	
....4	RZ170	2001-000666	R-CARBON;33OHM,5%,1/8W,AA,TP,1.8X3.2MM	
....4	RZ171	2001-000666	R-CARBON;33OHM,5%,1/8W,AA,TP,1.8X3.2MM	
....4	RZ172	2001-000241	R-CARBON;1.5KOHM,5%,1/8W,AA,TP,1.8X3.2M	
....4	RZ173	2001-001139	R-CARBON(S);39KOHM,5%,1/2W,AA,TP,2.4X6.4	
....4	RZ174	2001-001139	R-CARBON(S);39KOHM,5%,1/2W,AA,TP,2.4X6.4	
....4	RZ175	2001-000241	R-CARBON;1.5KOHM,5%,1/8W,AA,TP,1.8X3.2M	
....4	RZ176	2001-000221	R-CARBON;1.2KOHM,5%,1/8W,AA,TP,1.8X3.2M	
....4	RZ177	2001-000331	R-CARBON;12KOHM,5%,1/8W,AA,TP,1.8X3.2MM	
....4	RZ178	2001-000221	R-CARBON;1.2KOHM,5%,1/8W,AA,TP,1.8X3.2M	
....4	RZ179	2003-000713	R-METAL OXIDE(S);47ohm,5%,2W,AF,TP,4x12m	
....4	RZ180	2001-001100	R-CARBON(S);2.7OHM,5%,1/2W,AA,TP,2.4X6.4	
....4	RZ181	2001-001100	R-CARBON(S);2.7OHM,5%,1/2W,AA,TP,2.4X6.4	
....4	RZ182	2003-000713	R-METAL OXIDE(S);47ohm,5%,2W,AF,TP,4x12m	
....4	RZ183	2003-002157	R-METAL OXIDE;220OHM,5%,2W,AG,TP,6X16MM	
....4	RZ184	2003-002157	R-METAL OXIDE;220OHM,5%,2W,AG,TP,6X16MM	
....4	VR101	2103-000672	VR-SEMI;20Kohm,25%,1/5W,TOP	
..2		AA95-00427A	ASSY-SOUND;-,SP43J5P3S/XTT,J51A,-,-,CHIN	
...3	CN601A	3711-003626	CONNECTOR-HEADER;NOWALL,20P,1R,2.5mm,ANG	
...3	CN602A	3711-003626	CONNECTOR-HEADER;NOWALL,20P,1R,2.5mm,ANG	
...3	LD603	2701-000170	INDUCTOR-AXIAL;3.9uH,10%,3x7mm	
...3		AA99-20060M	ASSY-PCB SUB,AUTO; AA95-00427A ,V	S.N.A
....4	C614	2401-000962	C-AL;22uF,20%,50V,GP,TP,5x11,5	
....4	C615	2203-000595	C-CERAMIC,CHIP;0.22nF,5%,50V,NP0,TP,2012	
....4	C616	2203-000938	C-CERAMIC,CHIP;0.47nF,5%,50V,NP0,TP,2012	
....4	C617	2203-000142	C-CERAMIC,CHIP;1.5nF,10%,50V,X7R,TP,2012	
....4	C618	2203-000444	C-CERAMIC,CHIP;1nF,10%,50V,X7R,TP,2012,-	
....4	C619	2203-000444	C-CERAMIC,CHIP;1nF,10%,50V,X7R,TP,2012,-	
....4	C620	2401-000660	C-AL;2.2uF,20%,50V,GP,TP,5x11,5	
....4	C621	2401-000660	C-AL;2.2uF,20%,50V,GP,TP,5x11,5	
....4	C622	2203-000701	C-CERAMIC,CHIP;0.002nF,0.25pF,50V,NP0,TP	
....4	C623	2203-000701	C-CERAMIC,CHIP;0.002nF,0.25pF,50V,NP0,TP	
....4	C624	2203-001077	C-CERAMIC,CHIP;0.056nF,5%,50V,NP0,TP,201	
....4	C625	2203-001077	C-CERAMIC,CHIP;0.056nF,5%,50V,NP0,TP,201	
....4	C626	2401-000962	C-AL;22uF,20%,50V,GP,TP,5x11,5	
....4	C627	2203-000938	C-CERAMIC,CHIP;0.47nF,5%,50V,NP0,TP,2012	
....4	C628	2203-000142	C-CERAMIC,CHIP;1.5nF,10%,50V,X7R,TP,2012	
....4	C629	2203-001077	C-CERAMIC,CHIP;0.056nF,5%,50V,NP0,TP,201	
....4	C630	2401-000480	C-AL;10uF,20%,50V,GP,TP,5x11,5	
....4	C631	2203-000218	C-CERAMIC,CHIP;100nF,20%,50V,Y5V,TP,2012	
....4	C632	2401-002229	C-AL;470nF,20%,50V,WT,TP,5x11,5	
....4	C633	2401-002229	C-AL;470nF,20%,50V,WT,TP,5x11,5	
....4	C634	2203-000784	C-CERAMIC,CHIP;0.33nF,5%,50V,NP0,TP,2012	
....4	C635	2203-000784	C-CERAMIC,CHIP;0.33nF,5%,50V,NP0,TP,2012	
....4	C636	2203-000218	C-CERAMIC,CHIP;100nF,20%,50V,Y5V,TP,2012	
....4	C637	2401-000027	C-AL;4.7uF,20%,50V,GP,TP,5x11,5	
....4	C638	2401-002235	C-AL;10uF,20%,16V,GP,TP,5x11mm,5mm	
....4	C639	2401-002235	C-AL;10uF,20%,16V,GP,TP,5x11mm,5mm	
....4	C640	2203-000938	C-CERAMIC,CHIP;0.47nF,5%,50V,NP0,TP,2012	
....4	C641	2203-000142	C-CERAMIC,CHIP;1.5nF,10%,50V,X7R,TP,2012	
....4	C642	2401-000480	C-AL;10uF,20%,50V,GP,TP,5x11,5	
....4	C643	2401-000027	C-AL;4.7uF,20%,50V,GP,TP,5x11,5	
....4	C644	2401-000027	C-AL;4.7uF,20%,50V,GP,TP,5x11,5	
....4	C645	2401-000027	C-AL;4.7uF,20%,50V,GP,TP,5x11,5	
....4	C646	2401-000027	C-AL;4.7uF,20%,50V,GP,TP,5x11,5	
....4	C649	2401-002300	C-AL;47uF,20%,50V,GP,TP,6.3x11,5	
....4	C650	2203-000979	C-CERAMIC,CHIP;47nF,10%,50V,X7R,TP,2012	
....4	C651	2401-000365	C-AL;100uF,20%,50V,WT,TP,10x12.5mm,	
....4	C653	2203-000784	C-CERAMIC,CHIP;0.33nF,5%,50V,NP0,TP,2012	
....4	C654	2401-002229	C-AL;470nF,20%,50V,WT,TP,5x11,5	
....4	C655	2203-000784	C-CERAMIC,CHIP;0.33nF,5%,50V,NP0,TP,2012	
....4	C656	2401-002229	C-AL;470nF,20%,50V,WT,TP,5x11,5	
....4	C657	2401-002229	C-AL;470nF,20%,50V,WT,TP,5x11,5	
....4	C658	2203-000784	C-CERAMIC,CHIP;0.33nF,5%,50V,NP0,TP,2012	
....4	C661	2203-000784	C-CERAMIC,CHIP;0.33nF,5%,50V,NP0,TP,2012	
....4	C662	2401-002229	C-AL;470nF,20%,50V,WT,TP,5x11,5	
....4	C663	2401-002229	C-AL;470nF,20%,50V,WT,TP,5x11,5	
....4	C664	2203-000784	C-CERAMIC,CHIP;0.33nF,5%,50V,NP0,TP,2012	
....4	C667	2203-000784	C-CERAMIC,CHIP;0.33nF,5%,50V,NP0,TP,2012	
....4	C668	2401-002229	C-AL;470nF,20%,50V,WT,TP,5x11,5	
....4	C669	2401-002229	C-AL;470nF,20%,50V,WT,TP,5x11,5	
....4	C670	2203-000784	C-CERAMIC,CHIP;0.33nF,5%,50V,NP0,TP,2012	
....4	C684	2401-000480	C-AL;10uF,20%,50V,GP,TP,5x11,5	
....4	C688	2401-000962	C-AL;22uF,20%,50V,GP,TP,5x11,5	
....4	C691	2401-000962	C-AL;22uF,20%,50V,GP,TP,5x11,5	
....4	C692	2203-000260	C-CERAMIC,CHIP;10nF,10%,50V,X7R,TP,2012	
....4	C695	2203-000761	C-CERAMIC,CHIP;330nF,10%,16V,X7R,TP,2012	
....4	C696	2203-000170	C-CERAMIC,CHIP;1.8nF,10%,50V,X7R,TP,2012	
....4	C697	2203-000170	C-CERAMIC,CHIP;1.8nF,10%,50V,X7R,TP,2012	
....4	CB1	2401-000365	C-AL;100uF,20%,50V,WT,TP,10x12.5mm,	
....4	CD601	2203-000260	C-CERAMIC,CHIP;10nF,10%,50V,X7R,TP,2012	
....4	CD602	2203-000142	C-CERAMIC,CHIP;1.5nF,10%,50V,X7R,TP,2012	
....4	CD603	2401-000962	C-AL;22uF,20%,50V,GP,TP,5x11,5	
....4	CD604	2203-000595	C-CERAMIC,CHIP;0.22nF,5%,50V,NP0,TP,2012	
....4	CD605	2203-000938	C-CERAMIC,CHIP;0.47nF,5%,50V,NP0,TP,2012	
....4	CD606	2401-000962	C-AL;22uF,20%,50V,GP,TP,5x11,5	
....4	CD607	2203-000938	C-CERAMIC,CHIP;0.47nF,5%,50V,NP0,TP,2012	
....4	CD608	2203-000142	C-CERAMIC,CHIP;1.5nF,10%,50V,X7R,TP,2012	
....4	CD609	2203-000218	C-CERAMIC,CHIP;100nF,20%,50V,Y5V,TP,2012	
....4	CD610	2401-000480	C-AL;10uF,20%,50V,GP,TP,5x11,5	
....4	CD611	2203-000218	C-CERAMIC,CHIP;100nF,20%,50V,Y5V,TP,2012	
....4	CD612	2401-000027	C-AL;4.7uF,20%,50V,GP,TP,5x11,5	
....4	CD613	2401-000660	C-AL;2.2uF,20%,50V,GP,TP,5x11,5	
....4	CD615	2401-000660	C-AL;2.2uF,20%,50V,GP,TP,5x11,5	
....4	CD616	2203-000444	C-CERAMIC,CHIP;1nF,10%,50V,X7R,TP,2012,-	
....4	CD618	2203-000444	C-CERAMIC,CHIP;1nF,10%,50V,X7R,TP,2012,-	
....4	CD619	2401-002235	C-AL;10uF,20%,16V,GP,TP,5x11mm,5mm	
....4	CD620	2401-002235	C-AL;10uF,20%,16V,GP,TP,5x11mm,5mm	
....4	CD621	2203-000938	C-CERAMIC,CHIP;0.47nF,5%,50V,NP0,TP,2012	
....4	CD622	2203-000142	C-CERAMIC,CHIP;1.5nF,10%,50V,X7R,TP,2012	
....4	CD623	2401-000480	C-AL;10uF,20%,50V,GP,TP,5x11,5	
....4	CD624	2203-000495	C-CERAMIC,CHIP;2.2nF,10%,50V,X7R,TP,2012	
....4	CD625	2401-000962	C-AL;22uF,20%,50V,GP,TP,5x11,5	
....4	CD626	2203-000495	C-CERAMIC,CHIP;2.2nF,10%,50V,X7R,TP,2012	
....4	CD627	2401-000962	C-AL;22uF,20%,50V,GP,TP,5x11,5	
....4	CD628	2203-000260	C-CERAMIC,CHIP;10nF,10%,50V,X7R,TP,2012	
....4	CD629	2401-000365	C-AL;100uF,20%,50V,WT,TP,10x12.5mm,	
....4	CD630	2203-000761	C-CERAMIC,CHIP;330nF,10%,16V,X7R,TP,2012	
....4	CDB1	2401-000365	C-AL;100uF,20%,50V,WT,TP,10x12.5mm,	
⚠ 4	IC601	1204-001689	IC-SOUND PROCESSOR;MSP3410D-C5,PLCC,68P,	
⚠ 4	IC604	1201-000541	IC-OP AMP;062,SOP,8P,153MIL,DUAL,6V/mV,P	
⚠ 4	ICD601	1204-001198	IC-DECODER;DPL3519A-A2,PLCC,68P,-,PLASTI	
⚠ 4	ICD602	1201-000541	IC-OP AMP;062,SOP,8P,153MIL,DUAL,6V/mV,P	
....4	L601	2701-000170	INDUCTOR-AXIAL;3.9uH,10%,3x7mm	
....4	L602	2701-000170	INDUCTOR-AXIAL;3.9uH,10%,3x7mm	
....4	L603	2701-000112	INDUCTOR-AXIAL;100uH,10%,3x7mm	
....4	LD601	2701-000170	INDUCTOR-AXIAL;3.9uH,10%,3x7mm	
....4	LD602	2701-000112	INDUCTOR-AXIAL;100uH,10%,3x7mm	
....4	PCB	AA41-00087A	PCB-AUDIO;PLT51A,2L,FR-4,180X245X1.6T,3A	S.N.A
....4	Q606	0501-000727	TR-SMALL SIGNAL;BC848C,NPN,310mW,SOT-23,	
....4	Q607	0501-000727	TR-SMALL SIGNAL;BC848C,NPN,310mW,SOT-23,	

Level	Loc. No.	Code No.	Description ; Specification	Remark
....4	R601	2007-000029	R-CHIP;0OHM,5%,1/10W,DA,TP,2012	
....4	R602	2007-000029	R-CHIP;0OHM,5%,1/10W,DA,TP,2012	
....4	R610	2007-000290	R-CHIP;100OHM,5%,1/10W,DA,TP,2012	
....4	R611	2007-000290	R-CHIP;100OHM,5%,1/10W,DA,TP,2012	
....4	R614	2007-000468	R-CHIP;1KOHM,5%,1/10W,DA,TP,2012	
....4	R617	2007-000931	R-CHIP;470OHM,5%,1/10W,DA,TP,2012	
....4	R618	2007-000931	R-CHIP;470OHM,5%,1/10W,DA,TP,2012	
....4	R619	2007-000290	R-CHIP;100OHM,5%,1/10W,DA,TP,2012	
....4	R620	2007-000290	R-CHIP;100OHM,5%,1/10W,DA,TP,2012	
....4	R621	2007-000290	R-CHIP;100OHM,5%,1/10W,DA,TP,2012	
....4	R622	2007-000290	R-CHIP;100OHM,5%,1/10W,DA,TP,2012	
....4	R623	2007-000477	R-CHIP;1MOHM,5%,1/10W,DA,TP,2012	
....4	R624	2007-000477	R-CHIP;1MOHM,5%,1/10W,DA,TP,2012	
....4	R625	2007-000477	R-CHIP;1MOHM,5%,1/10W,DA,TP,2012	
....4	R626	2007-000477	R-CHIP;1MOHM,5%,1/10W,DA,TP,2012	
....4	R632	2007-000931	R-CHIP;470OHM,5%,1/10W,DA,TP,2012	
....4	R633	2007-000931	R-CHIP;470OHM,5%,1/10W,DA,TP,2012	
....4	R634	2007-000931	R-CHIP;470OHM,5%,1/10W,DA,TP,2012	
....4	R635	2007-000931	R-CHIP;470OHM,5%,1/10W,DA,TP,2012	
....4	R636	2007-000931	R-CHIP;470OHM,5%,1/10W,DA,TP,2012	
....4	R637	2007-000931	R-CHIP;470OHM,5%,1/10W,DA,TP,2012	
....4	R638	2007-000931	R-CHIP;470OHM,5%,1/10W,DA,TP,2012	
....4	R660	2007-000872	R-CHIP;4.7KOHM,5%,1/10W,DA,TP,2012	
....4	R661	2007-000872	R-CHIP;4.7KOHM,5%,1/10W,DA,TP,2012	
....4	R664	2007-001177	R-CHIP;8.2KOHM,5%,1/10W,DA,TP,2012	
....4	R665	2007-000774	R-CHIP;33KOHM,5%,1/10W,DA,TP,2012	
....4	R666	2007-000872	R-CHIP;4.7KOHM,5%,1/10W,DA,TP,2012	
....4	R669	2007-001177	R-CHIP;8.2KOHM,5%,1/10W,DA,TP,2012	
....4	R670	2007-000774	R-CHIP;33KOHM,5%,1/10W,DA,TP,2012	
....4	R672	2007-000586	R-CHIP;22KOHM,5%,1/10W,DA,TP,2012	
....4	R673	2007-000586	R-CHIP;22KOHM,5%,1/10W,DA,TP,2012	
....4	R674	2007-000300	R-CHIP;10KOHM,5%,1/10W,DA,TP,2012	
....4	R675	2007-000300	R-CHIP;10KOHM,5%,1/10W,DA,TP,2012	
....4	RB1	2007-000941	R-CHIP;47KOHM,5%,1/10W,DA,TP,2012	
....4	RB2	2007-000941	R-CHIP;47KOHM,5%,1/10W,DA,TP,2012	
....4	RB3	2007-000328	R-CHIP;11KOHM,5%,1/10W,DA,TP,2012	
....4	RB4	2007-000328	R-CHIP;11KOHM,5%,1/10W,DA,TP,2012	
....4	RD601	2007-000468	R-CHIP;1KOHM,5%,1/10W,DA,TP,2012	
....4	RD602	2007-000872	R-CHIP;4.7KOHM,5%,1/10W,DA,TP,2012	
....4	RD604	2007-001177	R-CHIP;8.2KOHM,5%,1/10W,DA,TP,2012	
....4	RD605	2007-000774	R-CHIP;33KOHM,5%,1/10W,DA,TP,2012	
....4	RD610	2007-001177	R-CHIP;8.2KOHM,5%,1/10W,DA,TP,2012	
....4	RD611	2007-000774	R-CHIP;33KOHM,5%,1/10W,DA,TP,2012	
....4	RD627	2007-000872	R-CHIP;4.7KOHM,5%,1/10W,DA,TP,2012	
....4	RDB1	2007-000941	R-CHIP;47KOHM,5%,1/10W,DA,TP,2012	
....4	RDB2	2007-000941	R-CHIP;47KOHM,5%,1/10W,DA,TP,2012	
....4	RDB3	2007-000328	R-CHIP;11KOHM,5%,1/10W,DA,TP,2012	
....4	RDB4	2007-000328	R-CHIP;11KOHM,5%,1/10W,DA,TP,2012	
....4	X601	2801-000186	CRYSTAL-UNIT;18.432MHz,25ppm,28-AAM,8pF,	
...3		AA63-40273A	SHIELD-CASE;-,SPTE,T0.5,-,CX724AHD	
...3		0202-000187	SOLDER-WIRE FLUX;-,RS60S,D1.2,63Sn/37Pb	S.N.A
..2		0202-000187	SOLDER-WIRE FLUX;-,RS60S,D1.2,63Sn/37Pb	S.N.A
..2		AA65-30104B	CLAMP-WIRE;NYLON 66,V2,BLK,W2 Z5,ALL MOD	S.N.A
..2		AA65-30013A	CLAMP-WIRE;NYLON-66,V0,NTR,DAWH-45N,-,-	S.N.A
..2		AA59-40003P	MODULE-FOCUS,PACK;-,F300,NTSC,43,64x62,	
..2		3301-001201	CORE-FERRITE;AE,230.5x10.25x36mm,1500,28	
..2		AA39-20577A	LEAD CONNECTOR-ASSY;-,-,-,6(3)P;-,-,-,YF	
..2		AA39-20010C	LEAD CONNECTOR-ASSY;-,YFH800-01,S,1P,600	
..2		AA65-30105A	CLAMP-WIRE;NYLON 66,V2,NTR,15MM,ALL MODE	S.N.A
..2		AA95-00007A	ASSY-F/CONVERTER;-,SVP-434JM,KPT51A,NTSC	
...3	CON01	3711-002709	CONNECTOR-HEADER;NOWALL,12P,1R,2.5MM,ANG	
...3	CON02	3711-002703	CONNECTOR-HEADER;NOWALL,5P,1R,2.5mm,ANGL	
⚠ ...3	IC03	AA13-30021E	IC-MCU;Z90234-R3911,SZM-374FC,ST,24K,	
⚠ ...3	IC04	1103-001208	IC-EEPROM;AT24C02-PC27 C,256x8Bit,DIP,8P	
...3	S/CASE	AA63-40037A	SHIELD-CASE;-,SPTE,T0.5,SCT12A,-	S.N.A
...3	XTR01	2804-001213	OSCILLATOR-CLOCK;80MHz,100ppm,10TTL & CM	
...3		AA99-20043V	ASSY-PCB SUB,AUTO; AA95-00007A ,V	S.N.A
....4	CF10	2203-000260	C-CERAMIC,CHIP;10nF,10%,50V,X7R,TP,2012	
....4	CF11	2401-001840	C-AL;100uF,20%,16V,GP,TP,6.3x11,5	
....4	CF12	2203-000218	C-CERAMIC,CHIP;100nF,20%,50V,Y5V,TP,2012	
....4	CF13	2401-001513	C-AL;47uF,20%,16V,WT,TP,5x11,5	
....4	CF14	2203-000218	C-CERAMIC,CHIP;100nF,20%,50V,Y5V,TP,2012	
....4	CF15	2203-000429	C-CERAMIC,CHIP;0.018nF,5%,50V,NP0,TP,201	
....4	CF16	2203-000634	C-CERAMIC,CHIP;0.022nF,5%,50V,NP0,TP,201	
....4	CF17	2203-000429	C-CERAMIC,CHIP;0.018nF,5%,50V,NP0,TP,201	
....4	CF18	2203-000683	C-CERAMIC,CHIP;0.027nF,5%,50V,NP0,TP,201	

Level	Loc. No.	Code No.	Description ; Specification	Remark
....4	CF19	2203-000218	C-CERAMIC,CHIP;100nF,20%,50V,Y5V,TP,2012	
....4	CF21	2203-000218	C-CERAMIC,CHIP;100nF,20%,50V,Y5V,TP,2012	
....4	CF22	2203-000218	C-CERAMIC,CHIP;100nF,20%,50V,Y5V,TP,2012	
....4	CF23	2401-001513	C-AL;47uF,20%,16V,WT,TP,5x11,5	
....4	CF24	2203-000218	C-CERAMIC,CHIP;100nF,20%,50V,Y5V,TP,2012	
....4	CF25	2203-000218	C-CERAMIC,CHIP;100nF,20%,50V,Y5V,TP,2012	
....4	CF26	2203-000218	C-CERAMIC,CHIP;100nF,20%,50V,Y5V,TP,2012	
....4	CF27	2203-000218	C-CERAMIC,CHIP;100nF,20%,50V,Y5V,TP,2012	
....4	CF28	2401-001513	C-AL;47uF,20%,16V,WT,TP,5x11,5	
....4	CF29	2401-001513	C-AL;47uF,20%,16V,WT,TP,5x11,5	
....4	CF30	2203-000218	C-CERAMIC,CHIP;100nF,20%,50V,Y5V,TP,2012	
....4	CF31	2203-000218	C-CERAMIC,CHIP;100nF,20%,50V,Y5V,TP,2012	
....4	CF32	2203-000218	C-CERAMIC,CHIP;100nF,20%,50V,Y5V,TP,2012	
....4	CF33	2203-000218	C-CERAMIC,CHIP;100nF,20%,50V,Y5V,TP,2012	
....4	CF34	2203-000218	C-CERAMIC,CHIP;100nF,20%,50V,Y5V,TP,2012	
....4	CF35	2203-000218	C-CERAMIC,CHIP;100nF,20%,50V,Y5V,TP,2012	
....4	CF37	2203-000218	C-CERAMIC,CHIP;100nF,20%,50V,Y5V,TP,2012	
....4	CF38	2401-001513	C-AL;47uF,20%,16V,WT,TP,5x11,5	
....4	CF39	2203-000218	C-CERAMIC,CHIP;100nF,20%,50V,Y5V,TP,2012	
....4	CF40	2203-000218	C-CERAMIC,CHIP;100nF,20%,50V,Y5V,TP,2012	
....4	CF41	2203-000218	C-CERAMIC,CHIP;100nF,20%,50V,Y5V,TP,2012	
....4	CF42	2203-000218	C-CERAMIC,CHIP;100nF,20%,50V,Y5V,TP,2012	
....4	CF44	2404-000151	C-TA,CHIP;1uF,20%,16V,-,TP,3216,-	
....4	CF45	2203-001158	C-CERAMIC,CHIP;0.068nF,5%,50V,NP0,TP,201	
....4	CF46	2404-000151	C-TA,CHIP;1uF,20%,16V,-,TP,3216,-	
....4	CF47	2203-001158	C-CERAMIC,CHIP;0.068nF,5%,50V,NP0,TP,201	
....4	CF48	2404-000151	C-TA,CHIP;1uF,20%,16V,-,TP,3216,-	
....4	CF49	2203-001158	C-CERAMIC,CHIP;0.068nF,5%,50V,NP0,TP,201	
....4	CF50	2203-000218	C-CERAMIC,CHIP;100nF,20%,50V,Y5V,TP,2012	
....4	CF51	2203-000218	C-CERAMIC,CHIP;100nF,20%,50V,Y5V,TP,2012	
....4	CF52	2203-000316	C-CERAMIC,CHIP;0.12nF,5%,50V,NP0,TP,2012	
....4	CF53	2203-000316	C-CERAMIC,CHIP;0.12nF,5%,50V,NP0,TP,2012	
....4	CF54	2404-001229	C-TA,CHIP;4.7uF,20%,25V,GP,TP,3528	
....4	CF55	2203-000218	C-CERAMIC,CHIP;100nF,20%,50V,Y5V,TP,2012	
....4	CF56	2203-000260	C-CERAMIC,CHIP;10nF,10%,50V,X7R,TP,2012	
....4	CF57	2404-001229	C-TA,CHIP;4.7uF,20%,25V,GP,TP,3528	
....4	CF58	2203-000218	C-CERAMIC,CHIP;100nF,20%,50V,Y5V,TP,2012	
....4	CF60	2401-001840	C-AL;100uF,20%,16V,GP,TP,6.3x11,5	
....4	CF61	2203-000218	C-CERAMIC,CHIP;100nF,20%,50V,Y5V,TP,2012	
....4	CF62	2401-001513	C-AL;47uF,20%,16V,WT,TP,5x11,5	
....4	CF63	2203-000218	C-CERAMIC,CHIP;100nF,20%,50V,Y5V,TP,2012	
....4	CF64	2203-000218	C-CERAMIC,CHIP;100nF,20%,50V,Y5V,TP,2012	
....4	CF65	2203-000218	C-CERAMIC,CHIP;100nF,20%,50V,Y5V,TP,2012	
....4	CF66	2401-001513	C-AL;47uF,20%,16V,WT,TP,5x11,5	
....4	CF67	2203-000218	C-CERAMIC,CHIP;100nF,20%,50V,Y5V,TP,2012	
....4	CF68	2203-000218	C-CERAMIC,CHIP;100nF,20%,50V,Y5V,TP,2012	
....4	CF69	2203-000218	C-CERAMIC,CHIP;100nF,20%,50V,Y5V,TP,2012	
....4	CF70	2203-000218	C-CERAMIC,CHIP;100nF,20%,50V,Y5V,TP,2012	
....4	CF71	2203-000218	C-CERAMIC,CHIP;100nF,20%,50V,Y5V,TP,2012	
....4	CF72	2203-000218	C-CERAMIC,CHIP;100nF,20%,50V,Y5V,TP,2012	
....4	CF75	2401-001840	C-AL;100uF,20%,16V,GP,TP,6.3x11,5	
....4	CF76	2203-000218	C-CERAMIC,CHIP;100nF,20%,50V,Y5V,TP,2012	
....4	CF77	2203-000429	C-CERAMIC,CHIP;0.018nF,5%,50V,NP0,TP,201	
....4	CF78	2203-000429	C-CERAMIC,CHIP;0.018nF,5%,50V,NP0,TP,201	
....4	CF79	2401-000027	C-AL;4.7uF,20%,50V,GP,TP,5x11,5	
....4	CF80	2203-000218	C-CERAMIC,CHIP;100nF,20%,50V,Y5V,TP,2012	
....4	CF81	2203-000218	C-CERAMIC,CHIP;100nF,20%,50V,Y5V,TP,2012	
....4	CF84	2203-000858	C-CERAMIC,CHIP;0.039nF,5%,50V,NP0,TP,201	
....4	CF85	2203-000839	C-CERAMIC,CHIP;0.39nF,5%,50V,NP0,TP,2012	
....4	CF86	2203-000858	C-CERAMIC,CHIP;0.039nF,5%,50V,NP0,TP,201	
....4	CF87	2203-000839	C-CERAMIC,CHIP;0.39nF,5%,50V,NP0,TP,2012	
....4	CF88	2203-000858	C-CERAMIC,CHIP;0.039nF,5%,50V,NP0,TP,201	
....4	CF89	2203-000839	C-CERAMIC,CHIP;0.39nF,5%,50V,NP0,TP,2012	
....4	DF01	0401-000008	DIODE-SWITCHING;DAN217,80V,100mA,SOT-23,	
....4	DF02	0401-000008	DIODE-SWITCHING;DAN217,80V,100mA,SOT-23,	
....4	DF03	0401-000008	DIODE-SWITCHING;DAN217,80V,100mA,SOT-23,	
....4	FF13	2901-000226	FILTER-EMI SMD;25V,0.3A,-,100pF,3.2x1.25	
....4	FF14	2901-000226	FILTER-EMI SMD;25V,0.3A,-,100pF,3.2x1.25	
....4	FF15	2901-000233	FILTER-EMI SMD;50V,0.3A,-,330pF,4.5x3.2x	
....4	FF16	2901-000233	FILTER-EMI SMD;50V,0.3A,-,330pF,4.5x3.2x	
....4	FF17	2901-000233	FILTER-EMI SMD;50V,0.3A,-,330pF,4.5x3.2x	
⚠ 4	IC01	1204-001406	IC-VIDEO PROCESS;FS310KBC,QFP,128P,1100M	
⚠ 4	IC02	1105-001270	IC-DRAM;72V161621,2x524Kx16BITBit,TSOP	
⚠ 4	IC05	1203-001419	IC-VOLTAGE REGULATOR;4931,TO-252,3P,6.6x	
....4	LF10	2901-000297	FILTER-EMI ON BOARD;-,3A,-,-,3.5x5,TP,-	
....4	LF11	2701-000116	INDUCTOR-AXIAL;10uH,10%,4.2x9.8mm	

Level	Loc. No.	Code No.	Description ; Specification	Remark
....4	LF12	2701-000115	INDUCTOR-AXIAL;10uH,10%,3x7mm	
....4	LF13	2701-000115	INDUCTOR-AXIAL;10uH,10%,3x7mm	
....4	LF14	2701-000115	INDUCTOR-AXIAL;10uH,10%,3x7mm	
....4	LF15	2701-000115	INDUCTOR-AXIAL;10uH,10%,3x7mm	
....4	LF16	2701-000149	INDUCTOR-AXIAL;2.7uH,10%,2.5x3.4mm	
....4	LF17	2701-000149	INDUCTOR-AXIAL;2.7uH,10%,2.5x3.4mm	
....4	LF18	2701-000149	INDUCTOR-AXIAL;2.7uH,10%,2.5x3.4mm	
....4	PCB	AA41-10997B	PCB-FORMAT CONNERTER;KPM51A,4L,FR-4,245X	S.N.A
....4	RF11	2007-000290	R-CHIP;100OHM,5%,1/10W,DA,TP,2012	
....4	RF13	2007-000290	R-CHIP;100OHM,5%,1/10W,DA,TP,2012	
....4	RF15	2007-000290	R-CHIP;100OHM,5%,1/10W,DA,TP,2012	
....4	RF16	2007-000477	R-CHIP;1MOHM,5%,1/10W,DA,TP,2012	
....4	RF17	2007-000477	R-CHIP;1MOHM,5%,1/10W,DA,TP,2012	
....4	RF18	2007-000872	R-CHIP;4.7KOHM,5%,1/10W,DA,TP,2012	
....4	RF19	2007-000872	R-CHIP;4.7KOHM,5%,1/10W,DA,TP,2012	
....4	RF21	2007-000642	R-CHIP;270OHM,5%,1/10W,DA,TP,2012	
....4	RF22	2007-001118	R-CHIP;680OHM,5%,1/10W,DA,TP,2012	
....4	RF23	2007-000401	R-CHIP;150OHM,5%,1/10W,DA,TP,2012	
....4	RF24	2007-000401	R-CHIP;150OHM,5%,1/10W,DA,TP,2012	
....4	RF25	2007-000518	R-CHIP;2.7KOHM,5%,1/10W,DA,TP,2012	
....4	RF26	2007-000518	R-CHIP;2.7KOHM,5%,1/10W,DA,TP,2012	
....4	RF27	2007-000290	R-CHIP;100OHM,5%,1/10W,DA,TP,2012	
....4	RF29	2007-000781	R-CHIP;33OHM,5%,1/10W,DA,TP,2012	
....4	RF30	2007-000781	R-CHIP;33OHM,5%,1/10W,DA,TP,2012	
....4	RF31	2007-000781	R-CHIP;33OHM,5%,1/10W,DA,TP,2012	
....4	RF32	2007-000781	R-CHIP;33OHM,5%,1/10W,DA,TP,2012	
....4	RF33	2007-000781	R-CHIP;33OHM,5%,1/10W,DA,TP,2012	
....4	RF34	2007-000781	R-CHIP;33OHM,5%,1/10W,DA,TP,2012	
....4	RF35	2007-000781	R-CHIP;33OHM,5%,1/10W,DA,TP,2012	
....4	RF36	2007-000781	R-CHIP;33OHM,5%,1/10W,DA,TP,2012	
....4	RF37	2007-000781	R-CHIP;33OHM,5%,1/10W,DA,TP,2012	
....4	RF38	2007-000781	R-CHIP;33OHM,5%,1/10W,DA,TP,2012	
....4	RF39	2007-000781	R-CHIP;33OHM,5%,1/10W,DA,TP,2012	
....4	RF40	2007-000781	R-CHIP;33OHM,5%,1/10W,DA,TP,2012	
....4	RF41	2007-000781	R-CHIP;33OHM,5%,1/10W,DA,TP,2012	
....4	RF42	2007-000781	R-CHIP;33OHM,5%,1/10W,DA,TP,2012	
....4	RF43	2007-000781	R-CHIP;33OHM,5%,1/10W,DA,TP,2012	
....4	RF44	2007-000781	R-CHIP;33OHM,5%,1/10W,DA,TP,2012	
....4	RF45	2007-000781	R-CHIP;33OHM,5%,1/10W,DA,TP,2012	
....4	RF46	2007-000781	R-CHIP;33OHM,5%,1/10W,DA,TP,2012	
....4	RF47	2007-000781	R-CHIP;33OHM,5%,1/10W,DA,TP,2012	
....4	RF48	2007-000781	R-CHIP;33OHM,5%,1/10W,DA,TP,2012	
....4	RF49	2007-000781	R-CHIP;33OHM,5%,1/10W,DA,TP,2012	
....4	RF51	2007-000781	R-CHIP;33OHM,5%,1/10W,DA,TP,2012	
....4	RF52	2007-000781	R-CHIP;33OHM,5%,1/10W,DA,TP,2012	
....4	RF53	2007-000781	R-CHIP;33OHM,5%,1/10W,DA,TP,2012	
....4	RF54	2007-000781	R-CHIP;33OHM,5%,1/10W,DA,TP,2012	
....4	RF55	2007-000781	R-CHIP;33OHM,5%,1/10W,DA,TP,2012	
....4	RF56	2007-000781	R-CHIP;33OHM,5%,1/10W,DA,TP,2012	
....4	RF57	2007-000781	R-CHIP;33OHM,5%,1/10W,DA,TP,2012	
....4	RF58	2007-000781	R-CHIP;33OHM,5%,1/10W,DA,TP,2012	
....4	RF59	2007-000781	R-CHIP;33OHM,5%,1/10W,DA,TP,2012	
....4	RF60	2007-000781	R-CHIP;33OHM,5%,1/10W,DA,TP,2012	
....4	RF61	2007-000781	R-CHIP;33OHM,5%,1/10W,DA,TP,2012	
....4	RF62	2007-000781	R-CHIP;33OHM,5%,1/10W,DA,TP,2012	
....4	RF64	2007-000290	R-CHIP;1000HM,5%,1/10W,DA,TP,2012	
....4	RF66	2007-000781	R-CHIP;33OHM,5%,1/10W,DA,TP,2012	
....4	RF67	2007-000781	R-CHIP;33OHM,5%,1/10W,DA,TP,2012	
....4	RF68	2007-000290	R-CHIP;100OHM,5%,1/10W,DA,TP,2012	
....4	RF70	2007-000468	R-CHIP;1KOHM,5%,1/10W,DA,TP,2012	
....4	RF71	2007-000468	R-CHIP;1KOHM,5%,1/10W,DA,TP,2012	
....4	RF72	2007-000468	R-CHIP;1KOHM,5%,1/10W,DA,TP,2012	
....4	RF73	2007-000468	R-CHIP;1KOHM,5%,1/10W,DA,TP,2012	
....4	RF74	2007-000468	R-CHIP;1KOHM,5%,1/10W,DA,TP,2012	
....4	RF75	2007-000468	R-CHIP;1KOHM,5%,1/10W,DA,TP,2012	
....4	RF76	2007-000468	R-CHIP;1KOHM,5%,1/10W,DA,TP,2012	
....4	RF78	2007-000468	R-CHIP;1KOHM,5%,1/10W,DA,TP,2012	
....4	RF79	2007-000468	R-CHIP;1KOHM,5%,1/10W,DA,TP,2012	
....4	RF80	2007-000468	R-CHIP;1KOHM,5%,1/10W,DA,TP,2012	
....4	RF81	2007-000872	R-CHIP;4.7KOHM,5%,1/10W,DA,TP,2012	
....4	RF82	2007-000290	R-CHIP;1000HM,5%,1/10W,DA,TP,2012	
....4	RF83	2007-000468	R-CHIP;1KOHM,5%,1/10W,DA,TP,2012	
....4	RF84	2007-000872	R-CHIP;4.7KOHM,5%,1/10W,DA,TP,2012	
....4	RF85	2007-000872	R-CHIP;4.7KOHM,5%,1/10W,DA,TP,2012	
....4	RF86	2007-001166	R-CHIP;75OHM,5%,1/10W,DA,TP,2012	
....4	RF87	2007-001166	R-CHIP;75OHM,5%,1/10W,DA,TP,2012	
....4	RF88	2007-001166	R-CHIP;75OHM,5%,1/10W,DA,TP,2012	

Level	Loc. No.	Code No.	Description ; Specification	Remark
....4	XTR02	2801-000152	CRYSTAL-UNIT;14.31818MHz,40ppm,28-AAM,16	
....4	XTR04	2801-000724	CRYSTAL-UNIT;6MHz,50ppm,28-AAM,20pF,40oh	
..2		AA65-30109A	CLAMP-FBT;NYLON-66,V2,BLK,-,-,-	S.N.A

ASSY PCB CRT

Level	Loc. No.	Code No.	Description ; Specification	Remark
1	*	AA95-00129L	ASSY PCB CRT;-,J51A,43,53,PAL,-	
..2	BDW-GN	AA39-20009G	LEAD CONNECTOR-ASSY;-,YFH800-01,-,1P,700	
..2	C511	2201-000969	C-CERAMIC,DISC;10nF,+80-20%,3.15kV,Y5V,T	
..2	C541	2201-000969	C-CERAMIC,DISC;10nF,+80-20%,3.15kV,Y5V,T	
..2	C571	2201-000969	C-CERAMIC,DISC;10nF,+80-20%,3.15kV,Y5V,T	
..2	CN501	3711-003051	CONNECTOR-HEADER;BOX,8P,1R,2.5mm,STRAGHT	
..2	CN502	3711-003052	CONNECTOR-HEADER;BOX,10P,1R,2.5mm,STRAGH	
..2	CN502B	3711-003052	CONNECTOR-HEADER;BOX,10P,1R,2.5mm,STRAGH	
..2	CN503	3711-003052	CONNECTOR-HEADER;BOX,10P,1R,2.5mm,STRAGH	
..2	CN503B	3711-003052	CONNECTOR-HEADER;BOX,10P,1R,2.5mm,STRAGH	
..2	CNW401	AA39-20027B	LEAD CONNECTOR-ASSY;-,67096-006,S,6P,400	
..2	CNW501	AA39-00127A	LEAD CONNECTOR-ASSY;,-,-,8P,-,-,-,35155-	
..2	CNW502	AA39-00112A	LEAD CONNECTOR-ASSY;,-,-,10P,-,-,-,35155	
..2	CNW503	AA39-00112A	LEAD CONNECTOR-ASSY;,-,-,10P,-,-,-,35155	
..2	FOCUS-	AA39-20115A	LEAD CONNECTOR-ASSY;-,BUSHING,-,1P,500,3	
..2	FOCUS-	AA39-20115A	LEAD CONNECTOR-ASSY;-,BUSHING,-,1P,500,3	
..2	FOCUS-	AA39-20115B	LEAD CONNECTOR-ASSY;-,BUSHING,-,1P,700MM	
..2	GBW-GN	3811-000446	WIRE-PVC CU;TCWA,600V,ROLL,17/0.16mm,#22	S.N.A
..2	GBW-SC	3811-000480	WIRE-PVC CU;BCWA,1KV,ROLL,17/0.16mm,#22,	S.N.A
..2	GDW-GN	AA39-20009D	LEAD CONNECTOR-ASSY;-,YFH800-01,-,1P,500	
..2	GRW-GN	3811-000446	WIRE-PVC CU;TCWA,600V,ROLL,17/0.16mm,#22	S.N.A
..2	GRW-SC	3811-000480	WIRE-PVC CU;BCWA,1KV,ROLL,17/0.16mm,#22,	S.N.A
⚠ ..2	IC501	AA96-50151B	ASSY-H/S;-,AMP,AA61-10060A,TDA6111Q,-	
...3		1201-001131	IC-VIDEO AMP;6111,SIP,9P,-,SINGLE,-,PLAS	
...3		6001-000057	SCREW-MACHINE;RH,+,M3,L6,ZPC(BLK),SWRCH1	S.N.A
...3		6021-000222	NUT-HEXAGON;2C,M3,ZPC(YEL),SM20C 1	S.N.A
...3		AA61-10060A	BRACKET-TR;-,-,CUS-1 1/2H,T0.5,-,-,-	S.N.A
⚠ ..2	IC531	AA96-50151B	ASSY-H/S;-,AMP,AA61-10060A,TDA6111Q,-	
⚠ ..2	IC561	AA96-50151B	ASSY-H/S;-,AMP,AA61-10060A,TDA6111Q,-	
..2	PCB	AA41-10998C	PCB-CRT;P51A,1L,FR-1,330x245x1.6T,3A,M	S.N.A
..2	R506	2001-001088	R-CARBON(S);1KOHM,5%,1/2W,AA,TP,2.4X6.4M	
..2	RDW-GN	AA39-20009F	LEAD CONNECTOR-ASSY;-,YFH800-01,-,1P,200	
..2	SG502	AA27-00084A	COIL;S-23,-,-,-,-,-,-,S-23,5000Mohm	
..2	SG532	AA27-00084A	COIL;S-23,-,-,-,-,-,-,S-23,5000Mohm	
..2	SG562	AA27-00084A	COIL;S-23,-,-,-,-,-,-,S-23,5000Mohm	
⚠ ..2	V501	3704-001019	SOCKET-CRT;10P,29.1PI,35.5PI,AU30U	
⚠ ..2	V531	3704-001019	SOCKET-CRT;10P,29.1PI,35.5PI,AU30U	
⚠ ..2	V561	3704-001019	SOCKET-CRT;10P,29.1PI,35.5PI,AU30U	
..2	VR501	2101-000321	VR-ROTARY;1Mohm,-,0.6W,SIDE	
..2	VR531	2101-000321	VR-ROTARY;1Mohm,-,0.6W,SIDE	
..2	VR561	2101-000321	VR-ROTARY;1Mohm,-,0.6W,SIDE	
..2		AA99-20082X	ASSY-PCB SUB,AUTO; AA95-00129L ,V	S.N.A
...3	C502	2401-000027	C-AL;4.7uF,20%,50V,GP,TP,5x11,5	
...3	C503	2201-000119	C-CERAMIC,DISC;100nF,+80-20%,50V,Y5V,TP,	
...3	C504	2401-001537	C-AL;47uF,20%,25V,GP,TP,6.3x7mm,5mm	
...3	C505	2305-000149	C-FILM,MPEF;100nF,5%,100V,TP,12x12.5x6.5	
...3	C506	2401-000430	C-AL;10uF,20%,250V,GP,TP,10x16mm,5m	
...3	C507	2305-000154	C-FILM,MPEF;100nF,5%,400V,TP,21.5x6.5x11	
...3	C510	2401-000430	C-AL;10uF,20%,250V,GP,TP,10x16mm,5m	
...3	C512	2401-000133	C-AL;1000uF,20%,16V,GP,TP,10x20,5	
...3	C513	2201-000983	C-CERAMIC,DISC;1nF,10%,2kV,Y5P,TP,9x5,7.	
...3	C514	2201-000599	C-CERAMIC,DISC;0.56nF,10%,500V,Y5P,TP,5.	
...3	C532	2401-000027	C-AL;4.7uF,20%,50V,GP,TP,5x11,5	
...3	C533	2201-000119	C-CERAMIC,DISC;100nF,+80-20%,50V,Y5V,TP,	
...3	C534	2401-001537	C-AL;47uF,20%,25V,GP,TP,6.3x7mm,5mm	
...3	C535	2305-000149	C-FILM,MPEF;100nF,5%,100V,TP,12x12.5x6.5	
...3	C536	2401-000430	C-AL;10uF,20%,250V,GP,TP,10x16mm,5m	
...3	C537	2305-000154	C-FILM,MPEF;100nF,5%,400V,TP,21.5x6.5x11	
...3	C540	2401-000430	C-AL;10uF,20%,250V,GP,TP,10x16mm,5m	
...3	C542	2201-000983	C-CERAMIC,DISC;1nF,10%,2kV,Y5P,TP,9x5,7.	
...3	C543	2201-000599	C-CERAMIC,DISC;0.56nF,10%,500V,Y5P,TP,5.	
...3	C562	2401-000027	C-AL;4.7uF,20%,50V,GP,TP,5x11,5	
...3	C563	2201-000119	C-CERAMIC,DISC;100nF,+80-20%,50V,Y5V,TP,	
...3	C564	2401-001537	C-AL;47uF,20%,25V,GP,TP,6.3x7mm,5mm	
...3	C565	2305-000149	C-FILM,MPEF;100nF,5%,100V,TP,12x12.5x6.5	
...3	C566	2401-000430	C-AL;10uF,20%,250V,GP,TP,10x16mm,5m	
...3	C567	2305-000154	C-FILM,MPEF;100nF,5%,400V,TP,21.5x6.5x11	
...3	C570	2401-000430	C-AL;10uF,20%,250V,GP,TP,10x16mm,5m	

Level	Loc. No.	Code No.	Description ; Specification	Remark
...3	C572	2201-000983	C-CERAMIC,DISC;1nF,10%,2kV,Y5P,TP,9x5,7.	
...3	C573	2201-000599	C-CERAMIC,DISC;0.56nF,10%,500V,Y5P,TP,5.	
...3	CN401	3711-002645	CONNECTOR-HEADER;BOX,6P,1R,2.5MM,STRAIGH	
...3	D501	0402-000546	DIODE-RECTIFIER;TVR10G,400V,1.0A,DO-41,T	
...3	D502	0402-000546	DIODE-RECTIFIER;TVR10G,400V,1.0A,DO-41,T	
...3	D503	0402-000493	DIODE-RECTIFIER;1R5GU41,400V,1.5A,DO-15L	
...3	D504	0401-000005	DIODE-SWITCHING;1N4148,100V,200MA,DO-35,	
...3	D509	0401-000005	DIODE-SWITCHING;1N4148,100V,200MA,DO-35,	
...3	D510	0401-000005	DIODE-SWITCHING;1N4148,100V,200MA,DO-35,	
...3	D531	0402-000546	DIODE-RECTIFIER;TVR10G,400V,1.0A,DO-41,T	
...3	D532	0402-000546	DIODE-RECTIFIER;TVR10G,400V,1.0A,DO-41,T	
...3	D533	0402-000493	DIODE-RECTIFIER;1R5GU41,400V,1.5A,DO-15L	
...3	D561	0402-000546	DIODE-RECTIFIER;TVR10G,400V,1.0A,DO-41,T	
...3	D562	0402-000546	DIODE-RECTIFIER;TVR10G,400V,1.0A,DO-41,T	
...3	D563	0402-000493	DIODE-RECTIFIER;1R5GU41,400V,1.5A,DO-15L	
...3	DZ501	0403-001317	DIODE-ZENER;MTZJ3.0B,3.01-3.22V,500mW,DO	
...3	DZ502	0403-000508	DIODE-ZENER;MTZJ5.6B,5.6V,5.45-5.73V,500	
...3	DZ503	0403-000708	DIODE-ZENER;MTZJ13B,13V,12.55-13.21V,500	
...3	DZ531	0403-001317	DIODE-ZENER;MTZJ3.0B,3.01-3.22V,500mW,DO	
...3	DZ532	0403-000508	DIODE-ZENER;MTZJ5.6B,5.6V,5.45-5.73V,500	
...3	DZ533	0403-000708	DIODE-ZENER;MTZJ13B,13V,12.55-13.21V,500	
...3	DZ561	0403-001317	DIODE-ZENER;MTZJ3.0B,3.01-3.22V,500mW,DO	
...3	DZ562	0403-000508	DIODE-ZENER;MTZJ5.6B,5.6V,5.45-5.73V,500	
...3	DZ563	0403-000708	DIODE-ZENER;MTZJ13B,13V,12.55-13.21V,500	
...3	L501	2701-000114	INDUCTOR-AXIAL;10uH,10%,2.5x3.4mm	
...3	L531	2701-000114	INDUCTOR-AXIAL;10uH,10%,2.5x3.4mm	
...3	L561	2701-000114	INDUCTOR-AXIAL;10uH,10%,2.5x3.4mm	
...3	Q501	0502-000006	TR-POWER;KSC1507,NPN,15W,TO-220,TP,120-	
...3	Q502	0501-000389	TR-SMALL SIGNAL;KSC815,NPN,400mW,TO-92,T	
...3	Q531	0502-000006	TR-POWER;KSC1507,NPN,15W,TO-220,TP,120-	
...3	Q561	0502-000006	TR-POWER;KSC1507,NPN,15W,TO-220,TP,120-	
...3	R500	2001-000221	R-CARBON;1.2KOHM,5%,1/8W,AA,TP,1.8X3.2M	
...3	R502	2001-000429	R-CARBON;1KOHM,5%,1/8W,AA,TP,1.8X3.2MM	
...3	R503	2001-000429	R-CARBON;1KOHM,5%,1/8W,AA,TP,1.8X3.2MM	
...3	R507	2001-000429	R-CARBON;1KOHM,5%,1/8W,AA,TP,1.8X3.2MM	
...3	R508	2003-000706	R-METAL OXIDE(S);47Kohm,5%,2W,AA,TP,4.3x	
...3	R511	2001-000009	R-CARBON;20KOHM,5%,1/8W,AA,TP,1.8X3.2MM	
...3	R513	2008-000252	R-FUSIBLE(S);0.47ohm,10%,1/2W,AF,TP,2.5x	
...3	R514	2001-001122	R-CARBON(S);3.9KOHM,5%,1/2W,AA,TP,2.4X6.	
...3	R515	2002-001017	R-COMPOSITION;1Kohm,10%,1/2W,AA,TP,3.7x9	
...3	R516	2001-000009	R-CARBON;20KOHM,5%,1/8W,AA,TP,1.8X3.2MM	
...3	R517	2001-000085	R-CARBON(S);100KOHM,5%,1/2W,AA,TP,2.4X6.	
...3	R518	2002-001021	R-COMPOSITION;560KOHM,10%,1/2W,AA,TP,3.7	
...3	R519	2002-001021	R-COMPOSITION;560KOHM,10%,1/2W,AA,TP,3.7	
...3	R520	2001-000066	R-CARBON(S);10KOHM,5%,1/2W,AA,TP,2.4X6.4	
...3	R521	2001-001052	R-CARBON(S);1.5MOHM,5%,1/2W,AA,TP,2.4X6.	
...3	R522	2002-001006	R-COMPOSITION;4.7Kohm,5%,1/2W,AA,TP,3.7x	
...3	R523	2002-001006	R-COMPOSITION;4.7Kohm,5%,1/2W,AA,TP,3.7x	
...3	R524	2001-000028	R-CARBON(S);100OHM,5%,1/2W,AA,TP,2.4X6.4	
...3	R526	2001-000539	R-CARBON;24KOHM,5%,1/8W,AA,TP,1.8X3.2MM	
...3	R527	2001-000577	R-CARBON;2KOHM,5%,1/8W,AA,TP,1.8X3.2MM	
...3	R528	2001-001015	R-CARBON;9.1KOHM,5%,1/8W,AA,TP,1.8X3.2M	
...3	R529	2002-001021	R-COMPOSITION;560KOHM,10%,1/2W,AA,TP,3.7	
...3	R532	2001-000429	R-CARBON;1KOHM,5%,1/8W,AA,TP,1.8X3.2MM	
...3	R533	2001-000429	R-CARBON;1KOHM,5%,1/8W,AA,TP,1.8X3.2MM	
...3	R536	2001-001088	R-CARBON(S);1KOHM,5%,1/2W,AA,TP,2.4X6.4M	
...3	R537	2001-000429	R-CARBON;1KOHM,5%,1/8W,AA,TP,1.8X3.2MM	
...3	R538	2003-000706	R-METAL OXIDE(S);47Kohm,5%,2W,AA,TP,4.3x	
...3	R540	2001-001000	R-CARBON;82KOHM,5%,1/8W,AA,TP,1.8X3.2MM	
...3	R541	2001-000009	R-CARBON;20KOHM,5%,1/8W,AA,TP,1.8X3.2MM	
...3	R543	2008-000252	R-FUSIBLE(S);0.47ohm,10%,1/2W,AF,TP,2.5x	
...3	R544	2001-001122	R-CARBON(S);3.9KOHM,5%,1/2W,AA,TP,2.4X6.	
...3	R545	2002-001017	R-COMPOSITION;1Kohm,10%,1/2W,AA,TP,3.7x9	
...3	R546	2001-000009	R-CARBON;20KOHM,5%,1/8W,AA,TP,1.8X3.2MM	
...3	R547	2001-000085	R-CARBON(S);100KOHM,5%,1/2W,AA,TP,2.4X6.	
...3	R548	2002-001021	R-COMPOSITION;560KOHM,10%,1/2W,AA,TP,3.7	
...3	R549	2002-001021	R-COMPOSITION;560KOHM,10%,1/2W,AA,TP,3.7	
...3	R550	2001-000066	R-CARBON(S);10KOHM,5%,1/2W,AA,TP,2.4X6.4	
...3	R551	2001-001052	R-CARBON(S);1.5MOHM,5%,1/2W,AA,TP,2.4X6.	
...3	R552	2002-001006	R-COMPOSITION;4.7Kohm,5%,1/2W,AA,TP,3.7x	
...3	R553	2002-001006	R-COMPOSITION;4.7Kohm,5%,1/2W,AA,TP,3.7x	
...3	R554	2001-000028	R-CARBON(S);100OHM,5%,1/2W,AA,TP,2.4X6.4	
...3	R559	2002-001015	R-COMPOSITION;47Kohm,5%,1/2W,AA,TP,3.7x9	
...3	R562	2001-000221	R-CARBON;1.2KOHM,5%,1/8W,AA,TP,1.8X3.2M	
...3	R563	2001-000429	R-CARBON;1KOHM,5%,1/8W,AA,TP,1.8X3.2MM	
...3	R564	2001-000837	R-CARBON;51KOHM,5%,1/8W,AA,TP,1.8X3.2MM	
...3	R566	2001-001088	R-CARBON(S);1KOHM,5%,1/2W,AA,TP,2.4X6.4M	
...3	R567	2001-000429	R-CARBON;1KOHM,5%,1/8W,AA,TP,1.8X3.2MM	
...3	R571	2001-000281	R-CARBON;100OHM,5%,1/8W,AA,TP,1.8X3.2MM	
...3	R572	2003-000706	R-METAL OXIDE(S);47Kohm,5%,2W,AA,TP,4.3x	
...3	R573	2008-000252	R-FUSIBLE(S);0.47ohm,10%,1/2W,AF,TP,2.5x	
...3	R574	2001-001122	R-CARBON(S);3.9KOHM,5%,1/2W,AA,TP,2.4X6.	
...3	R575	2002-001017	R-COMPOSITION;1Kohm,10%,1/2W,AA,TP,3.7x9	
...3	R576	2001-000009	R-CARBON;20KOHM,5%,1/8W,AA,TP,1.8X3.2MM	
...3	R577	2001-000085	R-CARBON(S);100KOHM,5%,1/2W,AA,TP,2.4X6.	
...3	R578	2002-001021	R-COMPOSITION;560KOHM,10%,1/2W,AA,TP,3.7	
...3	R579	2002-001021	R-COMPOSITION;560KOHM,10%,1/2W,AA,TP,3.7	
...3	R580	2001-000066	R-CARBON(S);10KOHM,5%,1/2W,AA,TP,2.4X6.4	
...3	R581	2001-001052	R-CARBON(S);1.5MOHM,5%,1/2W,AA,TP,2.4X6.	
...3	R582	2002-001006	R-COMPOSITION;4.7Kohm,5%,1/2W,AA,TP,3.7x	
...3	R583	2002-001006	R-COMPOSITION;4.7Kohm,5%,1/2W,AA,TP,3.7x	
...3	R584	2001-000028	R-CARBON(S);100OHM,5%,1/2W,AA,TP,2.4X6.4	
...3	R589	2002-001015	R-COMPOSITION;47Kohm,5%,1/2W,AA,TP,3.7x9	
...3	SG351	4715-001036	SURGE ABSORBER;350V,20%,-,-,TP	
...3	SG501	4715-001036	SURGE ABSORBER;350V,20%,-,-,TP	
...3	SG503	4715-001036	SURGE ABSORBER;350V,20%,-,-,TP	
...3	SG533	4715-001036	SURGE ABSORBER;350V,20%,-,-,TP	
...3	SG561	4715-001036	SURGE ABSORBER;350V,20%,-,-,TP	
...3	SG563	4715-001036	SURGE ABSORBER;350V,20%,-,-,TP	
..2		AA63-10002A	BAND-TIE;-,NYLON66 V2,-,-,L100,NTR,-,-	S.N.A
..2		0202-000187	SOLDER-WIRE FLUX;-,RS60S,D1.2,63Sn/37Pb	S.N.A

ASSY-PCB,H/V

1	*	AA95-00056C	ASSY-PCB,H/V;-,SP43J5HP3S/XTT,J51A,-,-,-	
..2	BK01	AA61-10068A	BRACKET-PCB;-,M2160,SPTE,T0.3,-,-,-	S.N.A
..2	BK02	AA61-10068A	BRACKET-PCB;-,M2160,SPTE,T0.3,-,-,-	S.N.A
..2	BK03	AA61-10068A	BRACKET-PCB;-,M2160,SPTE,T0.3,-,-,-	S.N.A
..2	CN401	3711-001049	CONNECTOR-HEADER;BOX,6P,1R,2.5mm,ANGLE,-	
..2	CN402	3711-002709	CONNECTOR-HEADER;NOWALL,12P,1R,2.5MM,ANG	
..2	CN403	AA39-20052A	LEAD CONNECTOR-ASSY;-,YBNH025-04,YSH025-	
..2	CN404	3711-001283	CONNECTOR-HEADER;NOWALL,14P,1R,2.5mm,ANG	
⚠ ..2	IC471	1203-000610	IC-PWM CONTROLLER;494,DIP,16P,300MIL,PLA	
..2	L351	AA27-10003M	COIL-CHOKE;-,6100uH,J,40,34mA,TP,EL0607R	
..2	PCB	AA41-00199C	PCB-H/V MODULE;P53A,CEM-1,1L,C,1.6T,330x	S.N.A
..2	Q371	AA96-50291A	ASSY-H/S;-,-,AA62-30154B,2SC4636,-	
...3		0205-000129	GREASE-SILICON;SC102,JAPAN	S.N.A
...3		0502-000442	TR-POWER;2SC4636RB,NPN,2W,TO-220,ST,10-	
...3		6003-000333	SCREW-TAPTITE;RH,+,2S,M3,L10,ZPC(YEL),SW	S.N.A
...3		AA62-30154B	HEAT SINK-ES;-,A6063,EXTR,-,-,SILVER ANO	S.N.A
..2	Q422	0505-000156	FET-SILICON;IRF620,N,200V,5A,0.8ohm,50W,	S.N.A
..2	R425	2003-000736	R-METAL OXIDE(S);560ohm,5%,3W,AA,TP,6x16	
..2	R485	2008-001096	R-FUSIBLE(S);3.3OHM,5%,1/2W,AC,BK,2.5X6.	
..2		AA99-20071J	ASSY-PCB SUB,AUTO; AA95-00056C ,V	S.N.A
...3	C341	2401-001914	C-AL;1uF,20%,50V,BP,TP,5x11,5	
...3	C342	2401-000962	C-AL;22uF,20%,50V,GP,TP,5x11,5	
...3	C351	2301-000175	C-FILM,PEF;15nF,5%,50V,TP,7.1x3.5x13mm,5	
...3	C352	2401-000480	C-AL;10uF,20%,50V,GP,TP,5x11,5	
...3	C353	2301-000204	C-FILM,PEF;2.7nF,5%,50V,TP,7.4x3.9x13mm,	
...3	C354	2301-000261	C-FILM,PEF;4.7nF,5%,100V,TP,10.5x12.5x6.	
...3	C355	2401-000480	C-AL;10uF,20%,50V,GP,TP,5x11,5	
...3	C356	2201-000180	C-CERAMIC,DISC;10nF,10%,50V,Y5V,TP,7x3,5	
...3	C357	2401-001989	C-AL;4.7uF,20%,50V,BP,TP,5x11,5	
...3	C358	2401-000471	C-AL;10uF,20%,50V,BP,TP,5x11,5mm	
...3	C360	2305-000289	C-FILM,MPEF;220nF,5%,63V,TP,-,5mm	
...3	C361	2306-000122	C-FILM,MPPF;100nF,5%,50V,TP,7.3x4.0x5.0m	
...3	C362	2305-000149	C-FILM,MPEF;100nF,5%,100V,TP,12x12.5x6.5	
...3	C371	2401-000302	C-AL;100uF,20%,25V,GP,TP,6.3x11,5	
...3	C372	2401-000480	C-AL;10uF,20%,50V,GP,TP,5x11,5	
...3	C373	2401-000302	C-AL;100uF,20%,25V,GP,TP,6.3x11,5	
...3	C374	2401-001621	C-AL;6.8uF,20%,450V,GP,TP,13x20,5	
...3	C405	2201-000558	C-CERAMIC,DISC;0.47nF,10%,50V,Y5P,TP,5x3	
...3	C406	2201-000370	C-CERAMIC,DISC;0.22nF,10%,50V,Y5P,TP,4x3	
...3	C421	2401-000302	C-AL;100uF,20%,25V,GP,TP,6.3x11,5	
...3	C429	2305-000704	C-FILM,MPEF;100nF,5%,250V,TP,16.5x10.3x5	
...3	C454	2303-000331	C-FILM,PPF;4.7nF,5%,630V,TP,19.5x12x7,7.	
...3	C455	2401-001527	C-AL;47uF,20%,250V,HR,TP,13x25mm,5m	
...3	C456	2201-000132	C-CERAMIC,DISC;0.1nF,10%,500V,Y5P,TP,6.5	
...3	C461	2201-000600	C-CERAMIC,DISC;0.56nF,10%,50V,Y5P,TP,5x3	
...3	C462	2301-000246	C-FILM,PEF;33nF,5%,100V,TP,7x5.0x9.5mm,5	

Level	Loc. No.	Code No.	Description ; Specification	Remark
...3	C480	2306-000122	C-FILM,MPPF;100nF,5%,50V,TP,7.3x4.0x5.0m	
...3	C481	2401-000914	C-AL;22uF,20%,16V,GP,TP,5x11,5	
...3	C482	2305-000178	C-FILM,MPEF;10nF,5%,100V,TP,-,5mm	
...3	C484	2401-001026	C-AL;3.3UF,20%,50V,GP,TP,5X11,5	
...3	C485	2201-000146	C-CERAMIC,DISC;0.1nF,5%,50V,SL,TP,5x3.5,	
...3	C486	2201-000146	C-CERAMIC,DISC;0.1nF,5%,50V,SL,TP,5x3.5,	
...3	C487	2401-001026	C-AL;3.3UF,20%,50V,GP,TP,5X11,5	
...3	C488	2401-002144	C-AL;47uF,20%,16V,GP,TP,5x11,5	
...3	C489	2401-001840	C-AL;100uF,20%,16V,GP,TP,6.3x11,5	
...3	C490	2201-000119	C-CERAMIC,DISC;100nF,+80-20%,50V,Y5V,TP,	
...3	C492	2401-002144	C-AL;47uF,20%,16V,GP,TP,5x11,5	
...3	C493	2201-000119	C-CERAMIC,DISC;100nF,+80-20%,50V,Y5V,TP,	
...3	C494	2201-000471	C-CERAMIC,DISC;0.33nF,10%,50V,Y5P,TP,4x3	
...3	C495	2301-000192	C-FILM,PEF;1nF,5%,50V,TP,5.3x10mm,5mm	
...3	C496	2401-000832	C-AL;220uF,20%,25V,GP,TP,8x11.5,5	
...3	D342	0401-000005	DIODE-SWITCHING;1N4148,100V,200MA,DO-35,	
...3	D343	0401-000005	DIODE-SWITCHING;1N4148,100V,200MA,DO-35,	
...3	D344	0401-000005	DIODE-SWITCHING;1N4148,100V,200MA,DO-35,	
...3	D345	0403-001325	DIODE-ZENER;MTZJ15C,14.35-15.09V,500mW,D	
...3	D352	0401-000005	DIODE-SWITCHING;1N4148,100V,200MA,DO-35,	
...3	D353	0401-000005	DIODE-SWITCHING;1N4148,100V,200MA,DO-35,	
...3	D355	0402-000546	DIODE-RECTIFIER;TVR10G,400V,1.0A,DO-41,T	
...3	D363	0401-000005	DIODE-SWITCHING;1N4148,100V,200MA,DO-35,	
...3	D364	0401-000005	DIODE-SWITCHING;1N4148,100V,200MA,DO-35,	
...3	D371	0401-000005	DIODE-SWITCHING;1N4148,100V,200MA,DO-35,	
...3	D372	0401-000005	DIODE-SWITCHING;1N4148,100V,200MA,DO-35,	
...3	D373	0402-000243	DIODE-RECTIFIER;RC2-V1,2000V,0.2A,DO-201	
...3	D384	0402-000132	DIODE-RECTIFIER;1N4004,400V,1A,DO-41,TP	
...3	D385	0401-000005	DIODE-SWITCHING;1N4148,100V,200MA,DO-35,	
...3	D386	0403-001316	DIODE-ZENER;MTZJ3.0A,2.85-3.07V,500mW,DO	
...3	D395	0403-001319	DIODE-ZENER;MTZJ4.7C,4.68-4.93V,500mW,DO	
⚠ ...3	D442	0401-000005	DIODE-SWITCHING;1N4148,100V,200MA,DO-35,	
⚠ ...3	D443	0401-000005	DIODE-SWITCHING;1N4148,100V,200MA,DO-35,	
⚠ ...3	D451	0402-000534	DIODE-RECTIFIER;RG10V,400V,1.2A,DO-201,T	
⚠ ...3	D456	0401-000005	DIODE-SWITCHING;1N4148,100V,200MA,DO-35,	
⚠ ...3	D457	0403-000714	DIODE-ZENER;MTZJ3.3B,3.3V,3.32-3.53V,500	
⚠ ...3	D474	0403-000734	DIODE-ZENER;TZP15B,15V,14.7-16.5V,1W,DO-	
⚠ ...3	D475	0401-000005	DIODE-SWITCHING;1N4148,100V,200MA,DO-35,	
⚠ ...3	D476	0401-000005	DIODE-SWITCHING;1N4148,100V,200MA,DO-35,	
⚠ ...3	D477	0401-000005	DIODE-SWITCHING;1N4148,100V,200MA,DO-35,	
⚠ ...3	D478	0401-000005	DIODE-SWITCHING;1N4148,100V,200MA,DO-35,	
⚠ ...3	D479	0401-000005	DIODE-SWITCHING;1N4148,100V,200MA,DO-35,	
⚠ ...3	D480	0402-000132	DIODE-RECTIFIER;1N4004,400V,1A,DO-41,TP	
⚠ ...3	D483	0403-000720	DIODE-ZENER;MTZJ9.1B,9.1V,8.57-9.01V,500	
⚠ ...3	D484	0402-000132	DIODE-RECTIFIER;1N4004,400V,1A,DO-41,TP	
⚠ ...3	D491	0401-000005	DIODE-SWITCHING;1N4148,100V,200MA,DO-35,	
⚠ ...3	D492	0403-000716	DIODE-ZENER;MTZJ4.7B,4.7V,4.55-4.8V,500m	
⚠ ...3	D493	0403-001325	DIODE-ZENER;MTZJ15C,14.35-15.09V,500mW,D	
⚠ ...3	IC481	1203-001217	IC-POSI.ADJUST REG.;431,TO-92,3P,4.58MIL	
...3	L341	2701-000116	INDUCTOR-AXIAL;10uH,10%,4.2x9.8mm	
...3	Q342	0501-000389	TR-SMALL SIGNAL;KSC815,NPN,400mW,TO-92,T	
...3	Q343	0501-000389	TR-SMALL SIGNAL;KSC815,NPN,400mW,TO-92,T	
...3	Q344	0501-000283	TR-SMALL SIGNAL;KSA539,PNP,400mW,TO-92,T	
...3	Q350	0501-000389	TR-SMALL SIGNAL;KSC815,NPN,400mW,TO-92,T	
...3	Q351	0501-000283	TR-SMALL SIGNAL;KSA539,PNP,400mW,TO-92,T	
...3	Q352	0501-000389	TR-SMALL SIGNAL;KSC815,NPN,400mW,TO-92,T	
...3	Q353	0501-000389	TR-SMALL SIGNAL;KSC815,NPN,400mW,TO-92,T	
...3	Q354	0501-000283	TR-SMALL SIGNAL;KSA539,PNP,400mW,TO-92,T	
...3	Q355	0501-000366	TR-SMALL SIGNAL;KSC2330-Y,NPN,1W,TO-92L,	
...3	Q381	0501-000389	TR-SMALL SIGNAL;KSC815,NPN,400mW,TO-92,T	
...3	Q382	0501-000389	TR-SMALL SIGNAL;KSC815,NPN,400mW,TO-92,T	
⚠ ...3	Q401	0501-000389	TR-SMALL SIGNAL;KSC815,NPN,400mW,TO-92,T	
⚠ ...3	Q402	0501-000389	TR-SMALL SIGNAL;KSC815,NPN,400mW,TO-92,T	
⚠ ...3	Q421	0501-000389	TR-SMALL SIGNAL;KSC815,NPN,400mW,TO-92,T	
⚠ ...3	Q451	0501-000389	TR-SMALL SIGNAL;KSC815,NPN,400mW,TO-92,T	
⚠ ...3	Q452	0501-000389	TR-SMALL SIGNAL;KSC815,NPN,400mW,TO-92,T	
⚠ ...3	Q453	0501-000389	TR-SMALL SIGNAL;KSC815,NPN,400mW,TO-92,T	
⚠ ...3	Q454	0501-000283	TR-SMALL SIGNAL;KSA539,PNP,400mW,TO-92,T	
⚠ ...3	Q461	0501-000389	TR-SMALL SIGNAL;KSC815,NPN,400mW,TO-92,T	
⚠ ...3	Q471	0501-000389	TR-SMALL SIGNAL;KSC815,NPN,400mW,TO-92,T	
⚠ ...3	Q473	0501-000389	TR-SMALL SIGNAL;KSC815,NPN,400mW,TO-92,T	
⚠ ...3	Q481	0501-000389	TR-SMALL SIGNAL;KSC815,NPN,400mW,TO-92,T	
⚠ ...3	Q482	0501-000283	TR-SMALL SIGNAL;KSA539,PNP,400mW,TO-92,T	
⚠ ...3	Q483	0501-000283	TR-SMALL SIGNAL;KSA539,PNP,400mW,TO-92,T	
⚠ ...3	Q491	0501-000389	TR-SMALL SIGNAL;KSC815,NPN,400mW,TO-92,T	
...3	R339	2001-000613	R-CARBON;3.9KOHM,5%,1/8W,AA,TP,1.8X3.2M	
...3	R340	2001-000241	R-CARBON;1.5KOHM,5%,1/8W,AA,TP,1.8X3.2M	

Level	Loc. No.	Code No.	Description ; Specification	Remark
...3	R341	2001-000429	R-CARBON;1KOHM,5%,1/8W,AA,TP,1.8X3.2MM	
...3	R342	2001-000273	R-CARBON;100KOHM,5%,1/8W,AA,TP,1.8X3.2M	
...3	R343	2001-000812	R-CARBON;5.6KOHM,5%,1/8W,AA,TP,1.8X3.2M	
...3	R344	2001-000890	R-CARBON;6.8KOHM,5%,1/8W,AA,TP,1.8X3.2M	
...3	R345	2001-001088	R-CARBON(S);1KOHM,5%,1/2W,AA,TP,2.4X6.4M	
...3	R345A	2001-000429	R-CARBON;1KOHM,5%,1/8W,AA,TP,1.8X3.2MM	
...3	R346	2001-000290	R-CARBON;10KOHM,5%,1/8W,AA,TP,1.8X3.2MM	
...3	R347	2001-001088	R-CARBON(S);1KOHM,5%,1/2W,AA,TP,2.4X6.4M	
...3	R348	2001-000591	R-CARBON;3.3KOHM,5%,1/8W,AA,TP,1.8X3.2M	
...3	R349	2001-000252	R-CARBON;1.6KOHM,5%,1/8W,AA,TP,1.8X3.2M	
...3	R351	2001-001178	R-CARBON(S);680OHM,5%,1/2W,AA,TP,2.4X6.4	
...3	R352	2001-000003	R-CARBON;330ohm,5%,1/8W,AA,TP,1.8x3.2mm	
...3	R353	2001-000890	R-CARBON;6.8KOHM,5%,1/8W,AA,TP,1.8X3.2M	
...3	R354	2001-000890	R-CARBON;6.8KOHM,5%,1/8W,AA,TP,1.8X3.2M	
...3	R355	2001-000006	R-CARBON;2.4KOHM,5%,1/8W,AA,TP,1.8X3.2M	
...3	R357	2001-000613	R-CARBON;3.9KOHM,5%,1/8W,AA,TP,1.8X3.2M	
...3	R358	2001-000008	R-CARBON;15KOHM,5%,1/8W,AA,TP,1.8X3.2MM	
...3	R359	2001-000766	R-CARBON;43KOHM,5%,1/8W,AA,TP,1.8X3.2MM	
...3	R360	2001-000857	R-CARBON;560OHM,5%,1/8W,AA,TP,1.8X3.2MM	
...3	R361	2001-001191	R-CARBON(S);820KOHM,5%,1/2W,AA,TP,2.4X6.	
...3	R362	2001-000660	R-CARBON;33KOHM,5%,1/8W,AA,TP,1.8X3.2MM	
...3	R363	2001-000723	R-CARBON;4.3KOHM,5%,1/8W,AA,TP,1.8X3.2M	
...3	R364	2001-000938	R-CARBON;68OHM,5%,1/8W,AA,TP,1.8X3.2MM	
...3	R365	2001-001120	R-CARBON(S);3.3OHM,5%,1/2W,AA,TP,2.4X6.4	
...3	R366	2001-000109	R-CARBON(S);470OHM,5%,1/2W,AA,TP,2.4X6.4	
...3	R367	2001-001065	R-CARBON(S);110KOHM,5%,1/2W,AA,TP,2.4X6.	
...3	R368	2001-001065	R-CARBON(S);110KOHM,5%,1/2W,AA,TP,2.4X6.	
...3	R369	2001-001065	R-CARBON(S);110KOHM,5%,1/2W,AA,TP,2.4X6.	
...3	R369A	2001-001065	R-CARBON(S);110KOHM,5%,1/2W,AA,TP,2.4X6.	
...3	R370	2001-001065	R-CARBON(S);110KOHM,5%,1/2W,AA,TP,2.4X6.	
...3	R371	2001-001065	R-CARBON(S);110KOHM,5%,1/2W,AA,TP,2.4X6.	
...3	R372	2001-001110	R-CARBON(S);240KOHM,5%,1/2W,AA,TP,2.4X6.	
...3	R373	2001-001110	R-CARBON(S);240KOHM,5%,1/2W,AA,TP,2.4X6.	
...3	R374	2001-001110	R-CARBON(S);240KOHM,5%,1/2W,AA,TP,2.4X6.	
...3	R375	2001-001113	R-CARBON(S);270KOHM,5%,1/2W,AA,TP,2.4X6.	
...3	R376	2001-000613	R-CARBON;3.9KOHM,5%,1/8W,AA,TP,1.8X3.2M	
...3	R377	2004-001892	R-METAL(S);162Kohm,1%,1/2W,AA,TP,2.5x6.5	
...3	R378	2004-001892	R-METAL(S);162Kohm,1%,1/2W,AA,TP,2.5x6.5	
...3	R379	2004-001892	R-METAL(S);162Kohm,1%,1/2W,AA,TP,2.5x6.5	
...3	R380	2004-001892	R-METAL(S);162Kohm,1%,1/2W,AA,TP,2.5x6.5	
...3	R381	2001-001088	R-CARBON(S);1KOHM,5%,1/2W,AA,TP,2.4X6.4M	
...3	R384	2001-001150	R-CARBON(S);470KOHM,5%,1/2W,AA,TP,2.4X6.	
...3	R385	2001-000577	R-CARBON;2KOHM,5%,1/8W,AA,TP,1.8X3.2MM	
...3	R386	2001-000786	R-CARBON;47KOHM,5%,1/8W,AA,TP,1.8X3.2MM	
...3	R387	2001-000009	R-CARBON;20KOHM,5%,1/8W,AA,TP,1.8X3.2MM	
...3	R388	2001-000522	R-CARBON;22KOHM,5%,1/8W,AA,TP,1.8X3.2MM	
...3	R389	2001-000577	R-CARBON;2KOHM,5%,1/8W,AA,TP,1.8X3.2MM	
...3	R395	2001-000734	R-CARBON;4.7KOHM,5%,1/8W,AA,TP,1.8X3.2M	
...3	R397	2001-000429	R-CARBON;1KOHM,5%,1/8W,AA,TP,1.8X3.2MM	
...3	R411	2001-000734	R-CARBON;4.7KOHM,5%,1/8W,AA,TP,1.8X3.2M	
...3	R412	2001-001088	R-CARBON(S);1KOHM,5%,1/2W,AA,TP,2.4X6.4M	
...3	R413	2001-000515	R-CARBON;220OHM,5%,1/8W,AA,TP,1.8X3.2MM	
...3	R414	2001-000290	R-CARBON;10KOHM,5%,1/8W,AA,TP,1.8X3.2MM	
...3	R415	2001-000734	R-CARBON;4.7KOHM,5%,1/8W,AA,TP,1.8X3.2M	
...3	R416	2001-000006	R-CARBON;2.4KOHM,5%,1/8W,AA,TP,1.8X3.2M	
...3	R420	2001-000281	R-CARBON;100OHM,5%,1/8W,AA,TP,1.8X3.2MM	
...3	R421	2003-002159	R-METAL OXIDE;150OHM,5%,1W,AG,TP,4.3X12M	
...3	R422	2001-000028	R-CARBON(S);100OHM,5%,1/2W,AA,TP,2.4X6.4	
...3	R423	2001-000613	R-CARBON;3.9KOHM,5%,1/8W,AA,TP,1.8X3.2M	
...3	R437	2008-001087	R-FUSIBLE(S);1.8ohm,5%,2W,AG,TP,3.9x12mm	
...3	R438	2001-000085	R-CARBON(S);100KOHM,5%,1/2W,AA,TP,2.4X6.	
...3	R439	2001-000085	R-CARBON(S);100KOHM,5%,1/2W,AA,TP,2.4X6.	
...3	R442	2008-000254	R-FUSIBLE(S);0.68ohm,5%,2W,AF,TP,3.9x10m	
...3	R442A	2008-000254	R-FUSIBLE(S);0.68ohm,5%,2W,AF,TP,3.9x10m	
...3	R443	2003-002156	R-METAL OXIDE;560OHM,5%,2W,AG,TP,6X16MM	
...3	R443A	2003-002156	R-METAL OXIDE;560OHM,5%,2W,AG,TP,6X16MM	
...3	R445	2001-000258	R-CARBON;1.8KOHM,5%,1/8W,AA,TP,1.8X3.2M	
...3	R446	2001-000522	R-CARBON;22KOHM,5%,1/8W,AA,TP,1.8X3.2MM	
...3	R447	2001-000812	R-CARBON;5.6KOHM,5%,1/8W,AA,TP,1.8X3.2M	
...3	R448	2001-000411	R-CARBON;18KOHM,5%,1/8W,AA,TP,1.8X3.2MM	
...3	R449	2001-000660	R-CARBON;33KOHM,5%,1/8W,AA,TP,1.8X3.2MM	
...3	R450	2001-000290	R-CARBON;10KOHM,5%,1/8W,AA,TP,1.8X3.2MM	
...3	R451	2001-000812	R-CARBON;5.6KOHM,5%,1/8W,AA,TP,1.8X3.2M	
...3	R452	2001-000241	R-CARBON;1.5KOHM,5%,1/8W,AA,TP,1.8X3.2M	
...3	R454	2001-000761	R-CARBON;430OHM,5%,1/8W,AA,TP,1.8X3.2MM	
...3	R455	2001-000761	R-CARBON;430OHM,5%,1/8W,AA,TP,1.8X3.2MM	
...3	R456	2001-000761	R-CARBON;430OHM,5%,1/8W,AA,TP,1.8X3.2MM	

Level	Loc. No.	Code No.	Description ; Specification	Remark
...3	R458	2001-000577	R-CARBON;2KOHM,5%,1/8W,AA,TP,1.8X3.2MM	
...3	R459	2001-001192	R-CARBON(S);820OHM,5%,1/2W,AA,TP,2.4X6.4	
...3	R460	2003-002044	R-METAL OXIDE(S);100ohm,5%,1W,AF,TP,2.5x	
...3	R461	2001-000613	R-CARBON;3.9KOHM,5%,1/8W,AA,TP,1.8X3.2M	
...3	R464	2001-000734	R-CARBON;4.7KOHM,5%,1/8W,AA,TP,1.8X3.2M	
...3	R471	2001-001146	R-CARBON(S);4.7OHM,5%,1/2W,AA,TP,2.4X6.4	
...3	R472	2001-000800	R-CARBON;5.1KOHM,5%,1/8W,AA,TP,1.8X3.2M	
...3	R473	2001-000800	R-CARBON;5.1KOHM,5%,1/8W,AA,TP,1.8X3.2M	
...3	R474	2001-000009	R-CARBON;20KOHM,5%,1/8W,AA,TP,1.8X3.2MM	
...3	R474A	2001-000508	R-CARBON;220KOHM,5%,1/8W,AA,TP,1.8X3.2M	
...3	R475	2004-001023	R-METAL;5.6Kohm,1%,1/8W,AA,TP,1.8x3.2m	
...3	R475B	2001-000734	R-CARBON;4.7KOHM,5%,1/8W,AA,TP,1.8X3.2M	
...3	R477	2001-000429	R-CARBON;1KOHM,5%,1/8W,AA,TP,1.8X3.2MM	
...3	R479	2001-000005	R-CARBON;390ohm,5%,1/8W,AA,TP,1.8x3.2mm	
...3	R480	2001-000449	R-CARBON;2.2KOHM,5%,1/8W,AA,TP,1.8X3.2M	
...3	R481	2001-000290	R-CARBON;10KOHM,5%,1/8W,AA,TP,1.8X3.2MM	
...3	R482	2001-001031	R-CARBON;91KOHM,5%,1/8W,AA,TP,1.8X3.2MM	
...3	R483	2001-000429	R-CARBON;1KOHM,5%,1/8W,AA,TP,1.8X3.2MM	
...3	R484	2001-000429	R-CARBON;1KOHM,5%,1/8W,AA,TP,1.8X3.2MM	
...3	R487	2001-000924	R-CARBON;680OHM,5%,1/8W,AA,TP,1.8X3.2MM	
...3	R489	2001-000522	R-CARBON;22KOHM,5%,1/8W,AA,TP,1.8X3.2MM	
...3	R490	2001-000723	R-CARBON;4.3KOHM,5%,1/8W,AA,TP,1.8X3.2M	
...3	R491	2001-001178	R-CARBON(S);680OHM,5%,1/2W,AA,TP,2.4X6.4	
...3	R492	2001-000591	R-CARBON;3.3KOHM,5%,1/8W,AA,TP,1.8X3.2M	
...3	R493	2001-000429	R-CARBON;1KOHM,5%,1/8W,AA,TP,1.8X3.2MM	
...3	R494	2001-000066	R-CARBON(S);10KOHM,5%,1/2W,AA,TP,2.4X6.4	
...3	R495	2001-000037	R-CARBON(S);330OHM,5%,1/2W,AA,TP,2.4X6.4	
...3	R496	2001-000347	R-CARBON;13KOHM,5%,1/8W,AA,TP,1.8X3.2MM	
...3	R497	2001-000003	R-CARBON;330ohm,5%,1/8W,AA,TP,1.8x3.2mm	
...3	R498	2001-001070	R-CARBON(S);120OHM,5%,1/2W,AA,TP,2.4X6.4	
..2		2001-000262	R-CARBON;1.8MOHM,5%,1/8W,AA,TP,1.8X3.2M	
..2		0202-000187	SOLDER-WIRE FLUX;-,RS60S,D1.2,63Sn/37Pb	S.N.A
..2		AA65-30105C	CLAMP-WIRE;ALL MODEL,NYLON 66,V2,NTR,5MM	S.N.A

ASSY-PCB,CONV AMP

1	*	AA95-00055L	ASSY-PCB,CONV AMP;-,SP53J5HF,J51A,-,-,-	
..2	C491	2306-000322	C-FILM,MPPF;12nF,5%,1.6KV,TP,29x20.5x13,	
..2	CN203	AA39-00115A	LEAD CONNECTOR-ASSY;,-,-,10P,-,-,-,YBNH2	
..2	CN401	AA39-00128A	LEAD CONNECTOR-ASSY;,-,-,8P,-,-,-,YBNH25	
..2	CN402	AA39-00116A	LEAD CONNECTOR-ASSY;,-,-,12P,-,-,-,YBNH2	
..2	CN802	AA39-00128A	LEAD CONNECTOR-ASSY;,-,-,8P,-,-,-,YBNH25	
⚠ ..2	ICZ101	AA96-50152C	ASSY-H/S;-,TR,AA62-30012A,KA7806A,30MM	
...3		1203-000284	IC-POSI.FIXED REG.;7806,TO-220,3P,-,PLAS	
...3		6003-000333	SCREW-TAPTITE;RH,+,2S,M3,L10,ZPC(YEL),SW	S.N.A
...3		AA62-30012A	HEAT SINK-ES;-,A6063 EXTR,-,-,T0220,-,-,	S.N.A
⚠ ..2	ICZ102	1203-000121	IC-NEGA.FIXED REG.;7906,TO-220,3P,-,PLAS	
⚠ ..2	ICZ103	AA96-00034A	ASSY-H/S;-,CONVERGENCE,AA62-30173D,STK3	
...3		0205-000129	GREASE-SILICON;SC102,JAPAN	S.N.A
...3		1201-001225	IC-VIDEO AMP;392,SIP,22P,-,THREE,-,PLAST	
...3		6003-001021	SCREW-TAPTITE;RH,+,B,M3,L15,ZPC(YEL),SWR	S.N.A
...3		AA62-30173D	HEAT SINK-ES;-,-,T1.0,WHITE,SCREW-HOLE(2	S.N.A
⚠ ..2	ICZ104	AA96-00034A	ASSY-H/S;-,CONVERGENCE,AA62-30173D,STK3	
..2	PCB	AA41-00135D	PCB-CONVERGENCE AMP;P51A,1L,CEM-1,330x24	S.N.A
..2	SG303	4715-001050	SURGE ABSORBER;2.4kV,20%,1500A,-,DISC-RA	
..2	VR472	2103-001086	VR-SEMI;100KOHM,25%,0.3W,TOP	
..2		0202-000187	SOLDER-WIRE FLUX;-,RS60S,D1.2,63Sn/37Pb	S.N.A
..2		AA99-20071E	ASSY-PCB SUB,AUTO; AA95-00055L ,V	S.N.A
...3	CN403	3711-002643	CONNECTOR-HEADER;BOX,4P,1R,2.5MM,STRAIGH	
...3	CZ101	2401-001429	C-AL;470uF,20%,50V,GP,TP,13x20,5	
...3	CZ102	2401-001429	C-AL;470uF,20%,50V,GP,TP,13x20,5	
...3	CZ103	2401-000689	C-AL;2200uF,20%,16V,GP,TP,13x25,5	
...3	CZ105	2401-000689	C-AL;2200uF,20%,16V,GP,TP,13x25,5	
...3	CZ106	2201-000180	C-CERAMIC,DISC;10nF,10%,50V,Y5V,TP,7x3,5	
...3	CZ107	2201-000180	C-CERAMIC,DISC;10nF,10%,50V,Y5V,TP,7x3,5	
...3	CZ108	2201-000499	C-CERAMIC,DISC;0.39nF,5%,50V,SL,TP,8.5x3	
...3	CZ109	2201-000499	C-CERAMIC,DISC;0.39nF,5%,50V,SL,TP,8.5x3	
...3	CZ110	2201-000499	C-CERAMIC,DISC;0.39nF,5%,50V,SL,TP,8.5x3	
...3	CZ111	2201-000976	C-CERAMIC,DISC;0.022nF,5%,50V,NP0,TP,5x3	
...3	CZ112	2201-000863	C-CERAMIC,DISC;0.68nF,10%,50V,Y5P,TP,5x3	
...3	CZ113	2201-000976	C-CERAMIC,DISC;0.022nF,5%,50V,NP0,TP,5x3	
...3	CZ114	2201-000863	C-CERAMIC,DISC;0.68nF,10%,50V,Y5P,TP,5x3	
...3	CZ115	2201-000976	C-CERAMIC,DISC;0.022nF,5%,50V,NP0,TP,5x3	
...3	CZ116	2201-000863	C-CERAMIC,DISC;0.68nF,10%,50V,Y5P,TP,5x3	
...3	CZ117	2201-000327	C-CERAMIC,DISC;2.2nF,10%,50V,Y5V,TP,6.5x	
...3	CZ118	2201-000327	C-CERAMIC,DISC;2.2nF,10%,50V,Y5V,TP,6.5x	
...3	CZ119	2201-000119	C-CERAMIC,DISC;100nF,+80-20%,50V,Y5V,TP,	
...3	CZ120	2201-000119	C-CERAMIC,DISC;100nF,+80-20%,50V,Y5V,TP,	
...3	CZ121	2201-000764	C-CERAMIC,DISC;0.082nF,5%,50V,NP0,TP,8x3	
...3	CZ126	2201-000499	C-CERAMIC,DISC;0.39nF,5%,50V,SL,TP,8.5x3	
...3	CZ127	2201-000499	C-CERAMIC,DISC;0.39nF,5%,50V,SL,TP,8.5x3	
...3	CZ128	2201-000499	C-CERAMIC,DISC;0.39nF,5%,50V,SL,TP,8.5x3	
...3	CZ132	2201-000976	C-CERAMIC,DISC;0.022nF,5%,50V,NP0,TP,5x3	
...3	CZ133	2201-000863	C-CERAMIC,DISC;0.68nF,10%,50V,Y5P,TP,5x3	
...3	CZ134	2201-000976	C-CERAMIC,DISC;0.022nF,5%,50V,NP0,TP,5x3	
...3	CZ135	2201-000863	C-CERAMIC,DISC;0.68nF,10%,50V,Y5P,TP,5x3	
...3	CZ136	2201-000976	C-CERAMIC,DISC;0.022nF,5%,50V,NP0,TP,5x3	
...3	CZ137	2201-000863	C-CERAMIC,DISC;0.68nF,10%,50V,Y5P,TP,5x3	
...3	CZ138	2201-000327	C-CERAMIC,DISC;2.2nF,10%,50V,Y5V,TP,6.5x	
...3	CZ139	2201-000327	C-CERAMIC,DISC;2.2nF,10%,50V,Y5V,TP,6.5x	
...3	CZ144	2401-001840	C-AL;100uF,20%,16V,GP,TP,6.3x11,5	
...3	CZ145	2201-000119	C-CERAMIC,DISC;100nF,+80-20%,50V,Y5V,TP,	
...3	CZ146	2401-001840	C-AL;100uF,20%,16V,GP,TP,6.3x11,5	
...3	CZ147	2201-000119	C-CERAMIC,DISC;100nF,+80-20%,50V,Y5V,TP,	
...3	CZ151	2202-000796	C-CERAMIC,MLC-AXIAL;1NF,10%,50V,Y5P,TP,3	
...3	CZ152	2202-000796	C-CERAMIC,MLC-AXIAL;1NF,10%,50V,Y5P,TP,3	
...3	CZ153	2202-000796	C-CERAMIC,MLC-AXIAL;1NF,10%,50V,Y5P,TP,3	
...3	CZ154	2202-000796	C-CERAMIC,MLC-AXIAL;1NF,10%,50V,Y5P,TP,3	
...3	CZ155	2202-000796	C-CERAMIC,MLC-AXIAL;1NF,10%,50V,Y5P,TP,3	
...3	CZ156	2202-000796	C-CERAMIC,MLC-AXIAL;1NF,10%,50V,Y5P,TP,3	
...3	D453	0402-001286	DIODE-RECTIFIER;RP1H,2000V,.1A,-,TP	
...3	D501	0401-000005	DIODE-SWITCHING;1N4148,100V,200MA,DO-35,	
...3	DZ120	0403-000510	DIODE-ZENER;MTZJ6.2B,6.2V,5.96-6.27V,500	
...3	DZ121	0403-000510	DIODE-ZENER;MTZJ6.2B,6.2V,5.96-6.27V,500	
...3	DZ122	0403-000510	DIODE-ZENER;MTZJ6.2B,6.2V,5.96-6.27V,500	
...3	DZ126	0402-000546	DIODE-RECTIFIER;TVR10G,400V,1.0A,DO-41,T	
...3	DZ127	0402-000546	DIODE-RECTIFIER;TVR10G,400V,1.0A,DO-41,T	
...3	DZ128	0403-000510	DIODE-ZENER;MTZJ6.2B,6.2V,5.96-6.27V,500	
...3	DZ129	0403-000510	DIODE-ZENER;MTZJ6.2B,6.2V,5.96-6.27V,500	
...3	DZ130	0403-000510	DIODE-ZENER;MTZJ6.2B,6.2V,5.96-6.27V,500	
...3	DZ131	0403-000510	DIODE-ZENER;MTZJ6.2B,6.2V,5.96-6.27V,500	
...3	LZ101	2701-001030	INDUCTOR-AXIAL;43uH,10%,5x14mm	
...3	LZ102	2701-001030	INDUCTOR-AXIAL;43uH,10%,5x14mm	
...3	LZ103	2701-000142	INDUCTOR-AXIAL;1uH,10%,2.5x3.4mm	
...3	LZ104	2701-000142	INDUCTOR-AXIAL;1uH,10%,2.5x3.4mm	
...3	LZ107	2701-000142	INDUCTOR-AXIAL;1uH,10%,2.5x3.4mm	
...3	LZ108	2701-000142	INDUCTOR-AXIAL;1uH,10%,2.5x3.4mm	
...3	LZ109	2701-000142	INDUCTOR-AXIAL;1uH,10%,2.5x3.4mm	
...3	LZ110	2701-000142	INDUCTOR-AXIAL;1uH,10%,2.5x3.4mm	
...3	LZ111	2701-000142	INDUCTOR-AXIAL;1uH,10%,2.5x3.4mm	
...3	LZ112	2701-000142	INDUCTOR-AXIAL;1uH,10%,2.5x3.4mm	
...3	R382	2002-001006	R-COMPOSITION;4.7Kohm,5%,1/2W,AA,TP,3.7x	
...3	R476	2004-004046	R-METAL(S);430Kohm,1%,1/2W,AA,TP,2.5x6.5	
...3	R476A	2004-004001	R-METAL(S);180Kohm,1%,1/2W,AA,TP,2.5x6.5	
...3	R476B	2004-001892	R-METAL(S);162Kohm,1%,1/2W,AA,TP,2.5x6.5	
...3	R476C	2004-004046	R-METAL(S);430Kohm,1%,1/2W,AA,TP,2.5x6.5	
...3	R478	2004-001892	R-METAL(S);162Kohm,1%,1/2W,AA,TP,2.5x6.5	
...3	R501	2004-001376	R-METAL(S);11Kohm,1%,1/2W,AA,TP,2.4x6.4m	
...3	R502	2004-004366	R-METAL(S);1.3Kohm,1%,1/2W,AA,TP,2.5x6.5	
...3	RFZ19	2008-000261	R-FUSIBLE(S);150ohm,5%,1W,AF,TP,3.9x10mm	
...3	RFZ20	2008-000261	R-FUSIBLE(S);150ohm,5%,1W,AF,TP,3.9x10mm	
...3	RFZ21	2008-000261	R-FUSIBLE(S);150ohm,5%,1W,AF,TP,3.9x10mm	
...3	RFZ22	2008-000261	R-FUSIBLE(S);150ohm,5%,1W,AF,TP,3.9x10mm	
...3	RFZ50	2008-000261	R-FUSIBLE(S);150ohm,5%,1W,AF,TP,3.9x10mm	
...3	RFZ51	2008-000261	R-FUSIBLE(S);150ohm,5%,1W,AF,TP,3.9x10mm	
...3	RFZ52	2008-000261	R-FUSIBLE(S);150ohm,5%,1W,AF,TP,3.9x10mm	
...3	RFZ53	2008-000261	R-FUSIBLE(S);150ohm,5%,1W,AF,TP,3.9x10mm	
...3	RZ101	2001-000429	R-CARBON;1KOHM,5%,1/8W,AA,TP,1.8X3.2MM	
...3	RZ102	2001-000429	R-CARBON;1KOHM,5%,1/8W,AA,TP,1.8X3.2MM	
...3	RZ103	2001-000429	R-CARBON;1KOHM,5%,1/8W,AA,TP,1.8X3.2MM	
...3	RZ104	2001-001114	R-CARBON(S);270OHM,5%,1/2W,AA,TP,2.4X6.4	
...3	RZ105	2001-001114	R-CARBON(S);270OHM,5%,1/2W,AA,TP,2.4X6.4	
...3	RZ106	2001-001114	R-CARBON(S);270OHM,5%,1/2W,AA,TP,2.4X6.4	
...3	RZ107	2001-001114	R-CARBON(S);270OHM,5%,1/2W,AA,TP,2.4X6.4	
...3	RZ108	2001-001114	R-CARBON(S);270OHM,5%,1/2W,AA,TP,2.4X6.4	
...3	RZ109	2001-001114	R-CARBON(S);270OHM,5%,1/2W,AA,TP,2.4X6.4	
...3	RZ110	2001-000563	R-CARBON;27KOHM,5%,1/8W,AA,TP,1.8X3.2MM	
...3	RZ111	2001-000563	R-CARBON;27KOHM,5%,1/8W,AA,TP,1.8X3.2MM	
...3	RZ112	2001-000563	R-CARBON;27KOHM,5%,1/8W,AA,TP,1.8X3.2MM	
...3	RZ113	2001-000591	R-CARBON;3.3KOHM,5%,1/8W,AA,TP,1.8X3.2M	

Level	Loc. No.	Code No.	Description ; Specification	Remark
...3	RZ114	2001-000857	R-CARBON;560OHM,5%,1/8W,AA,TP,1.8X3.2MM	
...3	RZ115	2001-000591	R-CARBON;3.3KOHM,5%,1/8W,AA,TP,1.8X3.2M	
...3	RZ116	2001-000857	R-CARBON;560OHM,5%,1/8W,AA,TP,1.8X3.2MM	
...3	RZ117	2001-000591	R-CARBON;3.3KOHM,5%,1/8W,AA,TP,1.8X3.2M	
...3	RZ118	2001-000857	R-CARBON;560OHM,5%,1/8W,AA,TP,1.8X3.2MM	
...3	RZ120	2001-000281	R-CARBON;100OHM,5%,1/8W,AA,TP,1.8X3.2MM	
...3	RZ121	2001-000281	R-CARBON;100OHM,5%,1/8W,AA,TP,1.8X3.2MM	
...3	RZ122	2001-000003	R-CARBON;330ohm,5%,1/8W,AA,TP,1.8x3.2mm	
...3	RZ123	2003-002148	R-METAL OXIDE;3.9OHM,2%,2W,AF,TP,3.9X10M	
...3	RZ124	2003-002148	R-METAL OXIDE;3.9OHM,2%,2W,AF,TP,3.9X10M	
...3	RZ125	2003-002148	R-METAL OXIDE;3.9OHM,2%,2W,AF,TP,3.9X10M	
...3	RZ126	2003-002148	R-METAL OXIDE;3.9OHM,2%,2W,AF,TP,3.9X10M	
...3	RZ127	2003-002148	R-METAL OXIDE;3.9OHM,2%,2W,AF,TP,3.9X10M	
...3	RZ128	2003-002148	R-METAL OXIDE;3.9OHM,2%,2W,AF,TP,3.9X10M	
...3	RZ129	2003-001024	R-METAL OXIDE(S);150ohm,5%,2W,AF,TP,3.9x	
...3	RZ129A	2003-001024	R-METAL OXIDE(S);150ohm,5%,2W,AF,TP,3.9x	
...3	RZ130	2003-001024	R-METAL OXIDE(S);150ohm,5%,2W,AF,TP,3.9x	
...3	RZ130A	2003-001024	R-METAL OXIDE(S);150ohm,5%,2W,AF,TP,3.9x	
...3	RZ131	2003-002157	R-METAL OXIDE;220OHM,5%,2W,AG,TP,6X16MM	
...3	RZ131A	2003-002157	R-METAL OXIDE;220OHM,5%,2W,AG,TP,6X16MM	
...3	RZ132	2003-002157	R-METAL OXIDE;220OHM,5%,2W,AG,TP,6X16MM	
...3	RZ132A	2003-002157	R-METAL OXIDE;220OHM,5%,2W,AG,TP,6X16MM	
...3	RZ133	2001-000563	R-CARBON;27KOHM,5%,1/8W,AA,TP,1.8X3.2MM	
...3	RZ134	2001-000563	R-CARBON;27KOHM,5%,1/8W,AA,TP,1.8X3.2MM	
...3	RZ135	2001-000563	R-CARBON;27KOHM,5%,1/8W,AA,TP,1.8X3.2MM	
...3	RZ136	2001-000591	R-CARBON;3.3KOHM,5%,1/8W,AA,TP,1.8X3.2M	
...3	RZ137	2001-000857	R-CARBON;560OHM,5%,1/8W,AA,TP,1.8X3.2MM	
...3	RZ138	2001-000591	R-CARBON;3.3KOHM,5%,1/8W,AA,TP,1.8X3.2M	
...3	RZ139	2001-000857	R-CARBON;560OHM,5%,1/8W,AA,TP,1.8X3.2MM	
...3	RZ140	2001-000591	R-CARBON;3.3KOHM,5%,1/8W,AA,TP,1.8X3.2M	
...3	RZ141	2001-000857	R-CARBON;560OHM,5%,1/8W,AA,TP,1.8X3.2MM	
...3	RZ142	2003-002148	R-METAL OXIDE;3.9OHM,2%,2W,AF,TP,3.9X10M	
...3	RZ143	2003-002148	R-METAL OXIDE;3.9OHM,2%,2W,AF,TP,3.9X10M	
...3	RZ144	2003-002148	R-METAL OXIDE;3.9OHM,2%,2W,AF,TP,3.9X10M	
...3	RZ145	2003-002148	R-METAL OXIDE;3.9OHM,2%,2W,AF,TP,3.9X10M	
...3	RZ146	2003-002148	R-METAL OXIDE;3.9OHM,2%,2W,AF,TP,3.9X10M	
...3	RZ147	2003-002148	R-METAL OXIDE;3.9OHM,2%,2W,AF,TP,3.9X10M	
...3	RZ148	2003-002157	R-METAL OXIDE;220OHM,5%,2W,AG,TP,6X16MM	
...3	RZ148A	2003-002157	R-METAL OXIDE;220OHM,5%,2W,AG,TP,6X16MM	
...3	RZ149	2003-001024	R-METAL OXIDE(S);150ohm,5%,2W,AF,TP,3.9x	
...3	RZ149A	2003-001024	R-METAL OXIDE(S);150ohm,5%,2W,AF,TP,3.9x	

ASSY-DOOR,BODY

1	*	AA95-00575A	ASSY-DOOR,BODY;-,SP53J5HFX/MVT,J51A,-,-,	
..2	AV+DB	6006-001095	SCREW-ASS'Y TAPT;WP,BH,+,M4,L12,ZPC(YEL)	S.N.A
..2	CP+DB	6002-000512	SCREW-TAPPING;RH,+,2,M4,L12,ZPC(BLK),SWR	S.N.A
..2	PC+BM	6003-001023	SCREW-TAPTITE;RWH,+,B,M3,L10,ZPC(YEL),SW	S.N.A
..2		AA91-00157P	ASSY-DOOR,BODY;-,HB,J51A PAL,SP43J5HF	
...3	KC+DB	6002-000512	SCREW-TAPPING;RH,+,2,M4,L12,ZPC(BLK),SWR	S.N.A
...3	KNOPOW	AA61-60005A	SPRING-CS;-,SUS304,0.6,OD10.7,H10,N4,-,-	
...3	WR+DB	6002-000512	SCREW-TAPPING;RH,+,2,M4,L12,ZPC(BLK),SWR	S.N.A
...3		AA64-00290B	WINDOW-REMOCON;-,PCJ533R,SV-704P,PC,-,VI	S.N.A
...3		AA64-00294B	DOOR-CONTROL;-,PCJ533R,GR-806P,ABS,HB,GR	
...3		AA64-00295H	DOOR-BODY;-,53J5HF,GR-806P P51A PAL,HIPS	
...3		AA64-00289B	INDICATOR-LED;-,PCJ533R,-,ACRYL,-,CLR,-	S.N.A
...3		AA64-00288C	KNOB-POWER;-,43J5,GR806P MASTER,ABS,HB,G	S.N.A
...3		AA64-00287B	KNOB-CHA,VOL;-,PCJ533R,S/METALLIC+UV COA	S.N.A
...3		AA64-00286B	KNOB-CONTROL;-,PCJ533R,GR-806P,ABS,HB,GR	S.N.A
...3		AA61-30001A	LATCH-DOOR;-,-,-,KIFUCO LA701,-	S.N.A
..2		AA95-00262B	ASSY-PCB,CONTROL;-,SP43J5HP3S/XTT,CHINA,	
...3	CNW01	AA39-00120C	LEAD CONNECTOR-ASSY;,-,-,11P,-,-,-,35155	
...3	CNY01	3711-003973	CONNECTOR-HEADER;BOX,11P,1R,2.5mm,STRAIG	
...3	LEDY01	0601-001381	LED;ROUND,RED/GRN,5.0MM,650/563NM	
...3	PCB	AA41-00189A	PCB-CONTROL;J51A,1L,FR-1,330x245x1.6T,4A	S.N.A
...3	RMY01	AA59-60002B	MODULE-REMOCON;-,ORC-50HF,38KHZ,940MM,ME	
...3	SWY03	3404-000176	SWITCH-TACT;12V,50mA,120gf,6x6mm,SPST	
...3	SWY04	3404-000176	SWITCH-TACT;12V,50mA,120gf,6x6mm,SPST	
...3	SWY05	3404-000176	SWITCH-TACT;12V,50mA,120gf,6x6mm,SPST	
...3	SWY06	3404-000176	SWITCH-TACT;12V,50mA,120gf,6x6mm,SPST	
...3	SWY07	3404-000176	SWITCH-TACT;12V,50mA,120gf,6x6mm,SPST	
...3	SWY08	3404-000176	SWITCH-TACT;12V,50mA,120gf,6x6mm,SPST	
...3		AA61-20069A	HOLDER-WIRE;-,-,NYLON-66,V0,NTR,PAWH-5NA	S.N.A
...3		0202-000187	SOLDER-WIRE FLUX;-,RS60S,D1.2,63Sn/37Pb	S.N.A
...3		3301-001201	CORE-FERRITE;AE,230.5x10.25x36mm,1500,28	
...3		AA63-10002B	BAND-TIE;-,NYLON66 V2,-,-,L140,NTR,-,-	S.N.A
...3		AA99-20061Y	ASSY-PCB SUB,AUTO; AA95-00262B ,V	S.N.A
....4	CY01	2401-001496	C-AL;47uF,20%,16V,GP,TP,5x7,5	
....4	QY01	0504-000123	TR-DIGITAL;KSR1010,NPN,300mW,10K,TO-92,T	
....4	QY02	0504-000123	TR-DIGITAL;KSR1010,NPN,300mW,10K,TO-92,T	
....4	RY01	2001-000109	R-CARBON(S);470OHM,5%,1/2W,AA,TP,2.4X6.4	
....4	RY02	2001-000924	R-CARBON;680OHM,5%,1/8W,AA,TP,1.8X3.2MM	
....4	RY03	2001-000429	R-CARBON;1KOHM,5%,1/8W,AA,TP,1.8X3.2MM	
....4	RY04	2001-000449	R-CARBON;2.2KOHM,5%,1/8W,AA,TP,1.8X3.2M	
....4	RY05	2001-000924	R-CARBON;680OHM,5%,1/8W,AA,TP,1.8X3.2MM	
....4	RY06	2001-000429	R-CARBON;1KOHM,5%,1/8W,AA,TP,1.8X3.2MM	
....4	RY07	2001-000020	R-CARBON(S);22OHM,5%,1/2W,AA,TP,2.4X6.4M	
....4	RY08	2001-001108	R-CARBON(S);22KOHM,5%,1/2W,AA,TP,2.4X6.4	
....4	RY09	2001-000109	R-CARBON(S);470OHM,5%,1/2W,AA,TP,2.4X6.4	
..2		AA95-00098D	ASSY-PCB,POWER S/W;-,SP43J5HP3S/XTT,J51A	
...3	CNP01	AA39-20176G	LEAD CONNECTOR-ASSY;,-,-,3(2)P,-,-,-,YFH	
...3	CNP02	AA39-20176G	LEAD CONNECTOR-ASSY;,-,-,3(2)P,-,-,-,YFH	
...3	PCB	AA41-00035A	PCB-POWER S/W;J51A,1L,CEM-1,245x245x1.6T	S.N.A
...3	SWP01	3403-000179	SWITCH-PUSH;250V,5A,DPST,-,JPW-2104B	
...3		AA63-10002B	BAND-TIE;-,NYLON66 V2,-,-,L140,NTR,-,-	S.N.A
...3		AA99-20067C	ASSY-PCB SUB,AUTO; AA95-00098D ,V	S.N.A
...3		AA61-00110B	BRACKET-MASTER;-,PCJ533R,SECC-1,T1.0,NTR	S.N.A
...3		0202-000187	SOLDER-WIRE FLUX;-,RS60S,D1.2,63Sn/37Pb	S.N.A
...3		6003-000334	SCREW-TAPTITE;RH,+,2S,M3,L6,ZPC(YEL),SWR	S.N.A
..2		AA95-00046D	ASSY-AV SIDE;-,SP43J5HP3C/XTT,J51A,-,-,-	
...3	CNW02	AA39-20032J	LEAD CONNECTOR-ASSY;-,67096-12,S,12P,130	
...3	CNY02	3711-003641	CONNECTOR-HEADER;BOX,12P,1R,2.5mm,STRAIG	
...3	JK101	3722-001163	JACK-VHS;4P,12mm,AU,BLK,N	
...3	JK102	3722-001031	JACK-RCA;3P,3.6MM,#18,AU	
...3	PCB	AA41-10969B	PCB-A/V SIDE;KPT51A/52A,1L,FR-1,245X245X	S.N.A
...3		AA63-10002A	BAND-TIE;-,NYLON66 V2,-,-,L100,NTR,-,-	S.N.A
...3		AA98-60004J	ASSY-SUB,PART;APT51A,A/V,-,ALL	S.N.A
....4		0202-000187	SOLDER-WIRE FLUX;-,RS60S,D1.2,63Sn/37Pb	S.N.A
...3		AA99-20066X	ASSY-PCB SUB,AUTO; AA95-00046D ,V	S.N.A
....4	CP01	2202-000263	C-CERAMIC,MLC-AXIAL;470pF,10%,50V,Y5P,TP	
....4	CP02	2202-000263	C-CERAMIC,MLC-AXIAL;470pF,10%,50V,Y5P,TP	
....4	CP03	2202-000263	C-CERAMIC,MLC-AXIAL;470pF,10%,50V,Y5P,TP	
....4	CP04	2401-000302	C-AL;100uF,20%,25V,GP,TP,6.3x11,5	
....4	CP05	2401-000302	C-AL;100uF,20%,25V,GP,TP,6.3x11,5	
....4	CP06	2401-000302	C-AL;100uF,20%,25V,GP,TP,6.3x11,5	
....4	CP07	2401-000302	C-AL;100uF,20%,25V,GP,TP,6.3x11,5	
....4	CP08	2401-000302	C-AL;100uF,20%,25V,GP,TP,6.3x11,5	
....4	CP09	2202-000121	C-CERAMIC,MLC-AXIAL;100pF,10%,50V,Y5P,TP	
....4	CP10	2202-000121	C-CERAMIC,MLC-AXIAL;100pF,10%,50V,Y5P,TP	
....4	RP01	2001-000273	R-CARBON;100KOHM,5%,1/8W,AA,TP,1.8X3.2M	
....4	RP02	2001-000969	R-CARBON;75OHM,5%,1/8W,AA,TP,1.8X3.2MM	
....4	RP03	2001-000273	R-CARBON;100KOHM,5%,1/8W,AA,TP,1.8X3.2M	
....4	RP04	2001-000969	R-CARBON;75OHM,5%,1/8W,AA,TP,1.8X3.2MM	
....4	RP05	2001-000969	R-CARBON;75OHM,5%,1/8W,AA,TP,1.8X3.2MM	
...3		3301-001201	CORE-FERRITE;AE,230.5x10.25x36mm,1500,28	

ASSY-PCB,SUB

1	*	AA95-00425B	ASSY-PCB,SUB;-,SP53J5HF,J51A,PAL,-,-	
..2	C430	2301-001219	C-FILM,MPE-PPF;3.9nF,5%,1.6KV,TP,29x8.5x	
..2	C431	2306-000326	C-FILM,MPPF;4.7nF,5%,1.6KV,TP,28.5x16x9m	
..2	C432	2306-000267	C-FILM,MPPF;8.2nF,5%,1.6KV,TP,28.5x18.5x	
..2	C436	2306-000235	C-FILM,MPPF;560nF,5%,400V,TP,26*22.5*14,	
..2	C438	2306-000267	C-FILM,MPPF;8.2nF,5%,1.6KV,TP,28.5x18.5x	
..2	C471	2301-001091	C-FILM,MPPF;470nF,5%,400V,TP,26x21.5x14.	
..2	C473	2306-000322	C-FILM,MPPF;12nF,5%,1.6KV,TP,29x20.5x13,	
..2	C474	2306-000326	C-FILM,MPPF;4.7nF,5%,1.6KV,TP,28.5x16x9m	
..2	C477	2301-000213	C-FILM,PEF;220nF,5%,250V,TP,21.5x11,7.5	
..2	C801	2306-000321	C-FILM,MPPF;470NF,5%,275V,TP,-,22.5	
..2	C802	2306-000321	C-FILM,MPPF;470NF,5%,275V,TP,-,22.5	
..2	C812	2401-003465	C-AL;680UF,20%,450V,GP,BK,35X60MM,2	
..2	C831	2306-000323	C-FILM,MPPF;2.2nF,5%,1.6KV,TP,28.5x15.5x	
..2	C862	2401-002225	C-AL;3300uF,20%,50V,WT,BK,22x41,7.5	
..2	C865	2401-000737	C-AL;2200uF,20%,50V,GP,TP,18x35.5,7	
..2	C868	2401-000737	C-AL;2200uF,20%,50V,GP,TP,18x35.5,7	
..2	C875	2401-002251	C-AL;470uF,20%,200V,GP,BK,25x40mm,1	
..2	C876	2401-000787	C-AL;220uF,20%,160V,GP,TP,16x31.5mm	
..2	C891	2201-000987	C-CERAMIC,DISC;2.2nF,20%,400V,Y5U,TP,12.	

Level	Loc. No.	Code No.	Description ; Specification	Remark
..2	C892	2201-000987	C-CERAMIC,DISC;2.2nF,20%,400V,Y5U,TP,12.	
..2	CN201	AA39-00128A	LEAD CONNECTOR-ASSY;,-,-,8P,-,-,-,YBNH25	
..2	CN202	AA39-00115A	LEAD CONNECTOR-ASSY;,-,-,10P,-,-,-,YBNH2	
..2	CN203	3711-003052	CONNECTOR-HEADER;BOX,10P,1R,2.5mm,STRAGH	
..2	CN401	3711-003051	CONNECTOR-HEADER;BOX,8P,1R,2.5mm,STRAGHT	
..2	CN402	3711-003974	CONNECTOR-HEADER;BOX,12P,1R,2.5mm,STRAIG	
..2	CN801	AA39-00116A	LEAD CONNECTOR-ASSY;,-,-,12P,-,-,-,YBNH2	
..2	CN802	3711-003051	CONNECTOR-HEADER;BOX,8P,1R,2.5mm,STRAGHT	
..2	CNW406	AA39-00009A	LEAD CONNECTOR-ASSY;-,YFH800-03,S,3(2)P,	
..2	CNW809	AA39-20061G	LEAD CONNECTOR-ASSY;-,YFH800-03,S,3P,100	
⚠ ..2	D464	0402-000236	DIODE-RECTIFIER;GI824,400V,5A,-,TP	
⚠ ..2	D804	AA96-50310A	ASSY-H/S;-,POWER,AA62-30150C,RBV606,-	
...3		AA62-30150C	HEAT SINK-ES;-,A6063 EXTR,-,WHT,40(24.5)	S.N.A
...3		AA60-30003A	WASHER;-,-,-,T1.5,-,SBHG-1,-	S.N.A
...3		6003-000333	SCREW-TAPTITE;RH,+,2S,M3,L10,ZPC(YEL),SW	S.N.A
...3		0402-000549	DIODE-BRIDGE;RBV606,600V,6A,-,BK	
...3		0205-000129	GREASE-SILICON;SC102,JAPAN	S.N.A
⚠ ..2	D810	0402-000250	DIODE-RECTIFIER;RG4C,1000V,1A,-	
⚠ ..2	D854	AA96-00111C	ASSY-H/S;-,-,AA62-30013L,FML-G12S,-	
...3		0402-000233	DIODE-RECTIFIER;FML-G12S,200V,5A,-,-	
...3		6003-000333	SCREW-TAPTITE;RH,+,2S,M3,L10,ZPC(YEL),SW	S.N.A
...3		AA62-30013L	HEATSINK-ES;-,-,-,-,44/22,-,WHT,-,-,-,-	S.N.A
⚠ ..2	D871	AA96-00032A	ASSY-H/S;-,-,AA62-30173B,FMLG12, FMGG26	
...3		0402-000233	DIODE-RECTIFIER;FML-G12S,200V,5A,-,-	
...3		0402-000231	DIODE-RECTIFIER;FMG-G26S,600V,4A,TO-220F	
...3		AA62-30173B	HEAT-SINK,ES;-,-,T1.0,WHT,-,ALL,-,-,88X2	S.N.A
...3		6003-000333	SCREW-TAPTITE;RH,+,2S,M3,L10,ZPC(YEL),SW	S.N.A
...3		0205-000129	GREASE-SILICON;SC102,JAPAN	S.N.A
⚠ ..2	DZ481	0403-001327	DIODE-ZENER;MTZJ18A,16.22-17.06V,500mW,D	
⚠ ..2	F801	3601-001007	FUSE-CARTRIDGE;250V,6.3A,TIME-LAG,GLASS,	
⚠ ..2	F802	3601-001137	FUSE-AXIAL LEAD;250V,6A,SLOW-BLOW,GLASS,	
⚠ ..2	F804	3601-001007	FUSE-CARTRIDGE;250V,6.3A,TIME-LAG,GLASS,	
⚠ ..2	IC301	AA96-50381A	ASSY-H/S;-,-,AA62-30180B,LA7845,-	
...3		0205-000129	GREASE-SILICON;SC102,JAPAN	S.N.A
...3		1204-000517	IC-VERTIVAL DEF.;LA7845,SIP,7P,-,PLASTIC	
...3		6003-000333	SCREW-TAPTITE;RH,+,2S,M3,L10,ZPC(YEL),SW	S.N.A
...3		AA62-30180B	HEAT SINK-ES;-,A6063 EXTR.,2,WHT,70MM,-,	S.N.A
⚠ ..2	IC421	1203-000165	IC-POSI.ADJUST REG.;78R12,TO-220,3P,-,-,	
⚠ ..2	IC430	1203-000162	IC-POSI.ADJUST REG.;317,TO-220,3P,-,PLAS	
⚠ ..2	IC431	1201-000191	IC-OP AMP;4558,DIP,8P,300MIL,DUAL,20V/mV	
⚠ ..2	IC801	AA96-00035A	ASSY-H/S;-,POWER,AA62-30181P,STR-F6656,	
...3		0205-000129	GREASE-SILICON;SC102,JAPAN	S.N.A
...3		6003-000333	SCREW-TAPTITE;RH,+,2S,M3,L10,ZPC(YEL),SW	S.N.A
...3		AA13-00018A	IC-HYBRID;-,STR-F6656,LF1351,5PIN,-,-	
...3		AA62-30181P	HEAT-SINK,ES;-,-,T1.0,WHITE,SCREW-HOLE(2	S.N.A
⚠ ..2	IC804	1203-001400	IC-POWER PRESCALER;SE110N,T0-220(SIP),3P	
⚠ ..2	IC806	0604-001032	PHOTO-COUPLER;TR,170-260%,300mW,DIP-4,ST	
..2	L431	AA27-30003M	COIL-LINEARLITY;-,5uH,OWA14x15,USRC0.1x6	
..2	L432	AA27-40001U	COIL-HORIZ.WIDTH;-,220UH,DR1420,PI0.12X1	
..2	L482	2701-001033	INDUCTOR-AXIAL;1uH,10%,5x14mm	
..2	L800	AA29-30002L	FILTER-LINE NOISE;-,10mHMIN,5A,AC90~260V	
..2	L801	AA29-30002F	FILTER-LINE NOISE;-,6mH,2.45A,-,-	
..2	L803	AA29-00008A	FILTER-LINE NOISE;35-6MH 3A,-,6MHMIN,3A,	
..2	L854	AA27-10001C	COIL-CHOKE;-,100uH,K,-,5.0A,ST,700UH-K(R	
..2	L860	AA27-10001C	COIL-CHOKE;-,100uH,K,-,5.0A,ST,700UH-K(R	
..2	L862	AA27-10001C	COIL-CHOKE;-,100uH,K,-,5.0A,ST,700UH-K(R	
..2	L872	AA27-10001C	COIL-CHOKE;-,100uH,K,-,5.0A,ST,700UH-K(R	
..2	L874	AA27-10002L	COIL-CHOKE;-,24UH,K,-,2A,-,24UH-K,10X10M	
..2	PCB	AA41-00197B	PCB-SUB;P51A,1L,CEM-1,330x245x1.6T,1A,	S.N.A
⚠ ..2	Q431	AA96-00033C	ASSY H/S;-,H-OUT,AA62-30173C,2SC5144, F	
...3		AA60-30001A	WASHER-PLATE;M3,ID3.5,15X8.5,T1.0,-,SBHG	S.N.A
...3		AA62-30173C	HEAT SINK-ES;-,-,T1.0,WHITE,SCREW-HOLE(2	S.N.A
...3		6003-000333	SCREW-TAPTITE;RH,+,2S,M3,L10,ZPC(YEL),SW	S.N.A
...3		0502-001121	TR-POWER;2SC5144,NPN,200W,TO-3PL,BK,10-	
...3		0402-001296	DIODE-RECTIFIER;FMP-3FU,1.5KV,5A,TO-3PF,	
...3		0205-000129	GREASE-SILICON;SC102,JAPAN	S.N.A
⚠ ..2	Q433	AA96-50407A	ASSY-H/S;-,-,AA62-30154G,KSD73Y,-	
...3		0205-000129	GREASE-SILICON;SC102,JAPAN	S.N.A
...3		0502-000298	TR-POWER;KSD73,NPN,30W,TO-220,-,120-240	
...3		6003-000333	SCREW-TAPTITE;RH,+,2S,M3,L10,ZPC(YEL),SW	S.N.A
...3		AA62-30154G	HEAT SINK-ES;-,A6063 EXTR,-,WHT,50/16,-,	S.N.A
⚠ ..2	Q441	AA96-50383F	ASSY-H/S;-,-,AA62-30180D,2SD921,-	
...3		0205-000129	GREASE-SILICON;SC102,JAPAN	S.N.A
...3		0502-001104	TR-POWER;2SD921,NPN,80W,TO-3P,BK,700-	
...3		6003-000333	SCREW-TAPTITE;RH,+,2S,M3,L10,ZPC(YEL),SW	S.N.A
...3		AA62-30180D	HEAT SINK-ES;-,A6063 EXTR.,2,WHT,50mm,-,	S.N.A

Level	Loc. No.	Code No.	Description ; Specification	Remark
⚠ ..2	Q472	0505-000156	FET-SILICON;IRF620,N,200V,5A,0.8ohm,50W,	S.N.A
⚠ ..2	Q473	AA96-00037A	ASSY-H/S;-,-,AA62-30181N,2SC4125, IRFS6	
...3		0502-001100	TR-POWER;2SC4125,NPN,70W,TO-3PML,BK,8-	
...3		AA62-30181N	HEAT-SINK,ES;-,-,T1.0,WHITE,SCREW-HOLE(2	S.N.A
...3		AA60-30001A	WASHER-PLATE;M3,ID3.5,15X8.5,T1.0,-,SBHG	S.N.A
...3		6003-000333	SCREW-TAPTITE;RH,+,2S,M3,L10,ZPC(YEL),SW	S.N.A
...3		0505-001202	FET-SILICON;IRFS640A,N,200V,9.8A,0.18ohm	S.N.A
...3		0205-000129	GREASE-SILICON;SC102,JAPAN	S.N.A
..2	R440	2008-001091	R-FUSIBLE(S);0.47OHM,10%,1/2W,AC,BK,2.5X	
..2	R442	2008-000189	R-FUSIBLE;0.47ohm,10%,2W,AA,TP,6x15.5mm	
..2	R445	2008-001091	R-FUSIBLE(S);0.47OHM,10%,1/2W,AC,BK,2.5X	
..2	R803	1404-001195	THERMISTOR-NTC;5.1ohm,15%,2900,27mW/C,BK	
..2	R815	2003-002162	R-METAL OXIDE(S);15KOHM,5%,3W,AG,TP,6X16	
..2	R815A	2003-002162	R-METAL OXIDE(S);15KOHM,5%,3W,AG,TP,6X16	
..2	R817	2009-001096	R-METAL PLATE;0.07ohm,5%,5W,CL,BK,5x14x1	
..2	R841	2008-001096	R-FUSIBLE(S);3.3OHM,5%,1/2W,AC,BK,2.5X6.	
⚠ ..2	T431	AA26-50001U	TRANS-HORIZ.DRIVE;-,28mH,105uH,4uH,ER28x	
⚠ ..2	T432	AA26-00053A	TRANS;-,1.2mH,-,-,EER4445,BK,1.2mH,-	
⚠ ..2	T444	AA26-30005A	TRANS-FLYBACK;-,FWZ-50A001,50,108V	
⚠ ..2	T461	AA26-50001V	TRANS-HORIZ.DRIVE;-,6.0mH,113uH,4uH,EI19	
⚠ ..2	T481	AA26-50001W	TRANS-HORIZ.DRIVE;-,830uH,23uH,4uH,EI-30	
⚠ ..2	T802	AA26-00006A	TRANS-SWITCHING;-,90~260V,110V/34V/+-30V	
..2		0202-000187	SOLDER-WIRE FLUX;-,RS60S,D1.2,63Sn/37Pb	S.N.A
..2		AA65-30110A	CLAMP-WIRE;NYLON 66,V2,BLK,PAL TVI,ALL M	S.N.A
..2		0403-001325	DIODE-ZENER;MTZJ15C,14.35-15.09V,500mW,D	
..2		AA65-30109A	CLAMP-FBT;NYLON-66,V2,BLK,-,-,-	S.N.A
..2		AA62-00010A	HEAT SINK;-,-,T1.0,SILVER,H/SINK & SHIEL	S.N.A
..2		AA99-20069B	ASSY-PCB SUB,AUTO; AA95-00425B ,V	S.N.A
...3	C301	2305-000149	C-FILM,MPEF;100nF,5%,100V,TP,12x12.5x6.5	
...3	C302	2201-000292	C-CERAMIC,DISC;1nF,10%,50V,Y5P,TP,5x3.5,	
...3	C303	2305-000149	C-FILM,MPEF;100nF,5%,100V,TP,12x12.5x6.5	
...3	C304	2201-000292	C-CERAMIC,DISC;1nF,10%,50V,Y5P,TP,5x3.5,	
...3	C305	2201-002022	C-CERAMIC,DISC;0.005nF,0.25pF,500V,NP0,T	
...3	C307	2401-000365	C-AL;100uF,20%,50V,WT,TP,10x12.5mm,	
...3	C308	2401-000365	C-AL;100uF,20%,50V,WT,TP,10x12.5mm,	
...3	C309	2305-000285	C-FILM,MPEF;220NF,5%,100V,TP,10.5X5.5X15	
...3	C311	2305-000149	C-FILM,MPEF;100nF,5%,100V,TP,12x12.5x6.5	
...3	C412	2301-000383	C-FILM,PEF;10nF,5%,50V,TP,6x7x3.2mm,5mm	
...3	C413	2401-000360	C-AL;100uF,20%,50V,GP,TP,8x11.5,5	
...3	C417	2401-001397	C-AL;470uF,20%,25V,GP,TP,10x16,5	
...3	C418	2401-000360	C-AL;100uF,20%,50V,GP,TP,8x11.5,5	
...3	C419	2201-000180	C-CERAMIC,DISC;10nF,10%,50V,Y5V,TP,7x3,5	
...3	C426	2401-000360	C-AL;100uF,20%,50V,GP,TP,8x11.5,5	
...3	C427	2401-002300	C-AL;47uF,20%,50V,GP,TP,6.3x11,5	
...3	C428	2306-000122	C-FILM,MPPF;100nF,5%,50V,TP,7.3x4.0x5.0m	
...3	C437	2401-003114	C-AL;4.7uF,20%,250V,WT,TP,10x16,5	
...3	C441	2401-000262	C-AL;100uF,20%,160V,HR,TP,16x25,7.5	
...3	C445	2401-001622	C-AL;6.8uF,20%,50V,BP,TP,16x25mm,7.	
...3	C450	2401-000262	C-AL;100uF,20%,160V,HR,TP,16x25,7.5	
...3	C451	2401-001160	C-AL;33uF,20%,160V,GP,-,16x35mm,7.5	
...3	C452	2201-000132	C-CERAMIC,DISC;0.1nF,10%,500V,Y5P,TP,6.5	
...3	C453	2401-002288	C-AL;470uF,20%,25V,WT,TP,10x20,5	
...3	C454	2401-001429	C-AL;470uF,20%,50V,GP,TP,13x20,5	
...3	C455	2201-000132	C-CERAMIC,DISC;0.1nF,10%,500V,Y5P,TP,6.5	
...3	C457	2201-000132	C-CERAMIC,DISC;0.1nF,10%,500V,Y5P,TP,6.5	
...3	C458	2401-002288	C-AL;470uF,20%,25V,WT,TP,10x20,5	
...3	C467	2401-000360	C-AL;100uF,20%,50V,GP,TP,8x11.5,5	
...3	C468	2201-000119	C-CERAMIC,DISC;100nF,+80-20%,50V,Y5V,TP,	
...3	C469	2201-000180	C-CERAMIC,DISC;10nF,10%,50V,Y5V,TP,7x3,5	
...3	C472	2401-000262	C-AL;100uF,20%,160V,HR,TP,16x25,7.5	
...3	C476	2401-000647	C-AL;2.2uF,20%,50V,BP,TP,5x11,5	
...3	C478	2301-000020	C-FILM,PEF;27nF,5%,100V,TP,7.3x4x12.5mm,	
...3	C479	2301-000200	C-FILM,PEF;2.2nF,5%,200V,TP,11.0x6.0x9.0	
...3	C483	2401-000660	C-AL;2.2uF,20%,50V,GP,TP,5x11,5	
...3	C484	2201-000132	C-CERAMIC,DISC;0.1nF,10%,500V,Y5P,TP,6.5	
...3	C809	2201-000551	C-CERAMIC,DISC;0.47nF,10%,1kV,Y5P,TP,6.3	
...3	C814	2201-002041	C-CERAMIC,DISC;0.82nF,10%,2kV,Y5P,TP,9x5	
...3	C815	2201-000406	C-CERAMIC,DISC;0.27nF,10%,2kV,Y5P,TP,6.3	
...3	C816	2201-000332	C-CERAMIC,DISC;2.2nF,20%,250V,Y5U,TP,9x4	
...3	C817	2201-000332	C-CERAMIC,DISC;2.2nF,20%,250V,Y5U,TP,9x4	
...3	C818	2301-001216	C-FILM,PPF;47nF,5%,630V,TP,20x14.5x22,7.	
...3	C819	2201-000332	C-CERAMIC,DISC;2.2nF,20%,250V,Y5U,TP,9x4	
...3	C833	2201-000292	C-CERAMIC,DISC;1nF,10%,50V,Y5P,TP,5x3.5,	
...3	C834	2401-003028	C-AL;100uF,20%,25V,WT,TP,6.3x11,5	
...3	C851	2201-000551	C-CERAMIC,DISC;0.47nF,10%,1kV,Y5P,TP,6.3	
...3	C852	2401-000133	C-AL;1000uF,20%,16V,GP,TP,10x20,5	

Level	Loc. No.	Code No.	Description ; Specification	Remark
...3	C854	2201-000551	C-CERAMIC,DISC;0.47nF,10%,1kV,Y5P,TP,6.3	
...3	C855	2401-003141	C-AL;2200uF,20%,25V,WT,TP,13x25,5mm	
...3	C857	2401-000133	C-AL;1000uF,20%,16V,GP,TP,10x20,5	
...3	C861	2201-000551	C-CERAMIC,DISC;0.47nF,10%,1kV,Y5P,TP,6.3	
...3	C864	2201-000551	C-CERAMIC,DISC;0.47nF,10%,1kV,Y5P,TP,6.3	
...3	C866	2401-000192	C-AL;1000uF,20%,50V,GP,TP,16x25,7.5	
...3	C869	2401-000192	C-AL;1000uF,20%,50V,GP,TP,16x25,7.5	
...3	C871	2201-000551	C-CERAMIC,DISC;0.47nF,10%,1kV,Y5P,TP,6.3	
...3	C872	2401-000703	C-AL;2200uF,20%,25V,GP,-,12.5x25mm,	
...3	C873	2401-001998	C-AL;1000uF,20%,25V,GP,TP,10x20,5mm	
...3	C874	2201-000551	C-CERAMIC,DISC;0.47nF,10%,1kV,Y5P,TP,6.3	
...3	C877	2305-000427	C-FILM,MPEF;47nF,5%,100V,TP,7.5x12.5x3.5	
...3	D302	0402-000546	DIODE-RECTIFIER;TVR10G,400V,1.0A,DO-41,T	
⚠ ...3	D433	0402-000537	DIODE-RECTIFIER;RH1A,600V,0.6A,DO-204AC	
⚠ ...3	D435	0402-000132	DIODE-RECTIFIER;1N4004,400V,1A,DO-41,TP	
⚠ ...3	D436	0401-000005	DIODE-SWITCHING;1N4148,100V,200MA,DO-35,	
⚠ ...3	D438	0402-000546	DIODE-RECTIFIER;TVR10G,400V,1.0A,DO-41,T	
⚠ ...3	D440	0402-000534	DIODE-RECTIFIER;RG10V,400V,1.2A,DO-201,T	
⚠ ...3	D441	0402-000534	DIODE-RECTIFIER;RG10V,400V,1.2A,DO-201,T	
⚠ ...3	D444	0402-000546	DIODE-RECTIFIER;TVR10G,400V,1.0A,DO-41,T	
⚠ ...3	D445	0402-000534	DIODE-RECTIFIER;RG10V,400V,1.2A,DO-201,T	
⚠ ...3	D472	0402-000546	DIODE-RECTIFIER;TVR10G,400V,1.0A,DO-41,T	
⚠ ...3	D474	0402-000546	DIODE-RECTIFIER;TVR10G,400V,1.0A,DO-41,T	
⚠ ...3	D801	1405-000187	VARISTOR;750V,1250A,12.5x7mm,TP	
⚠ ...3	D802	1405-000187	VARISTOR;750V,1250A,12.5x7mm,TP	
⚠ ...3	D834	0402-000546	DIODE-RECTIFIER;TVR10G,400V,1.0A,DO-41,T	
⚠ ...3	D843	0402-000546	DIODE-RECTIFIER;TVR10G,400V,1.0A,DO-41,T	
⚠ ...3	D851	0402-000493	DIODE-RECTIFIER;1R5GU41,400V,1.5A,DO-15L	
...3	DZ301	0403-001328	DIODE-ZENER;MTZJ22A,20.15-21.20V,500mW,D	
...3	DZ304	0403-001327	DIODE-ZENER;MTZJ18A,16.22-17.06V,500mW,D	
...3	DZ305	0403-001329	DIODE-ZENER;MTZJ24B,22.61-23.77V,500mW,D	
...3	DZ306	0403-001167	DIODE-ZENER;MTZJ30D,30V,29.02-30.51V,500	
...3	DZ307	0403-001329	DIODE-ZENER;MTZJ24B,22.61-23.77V,500mW,D	
...3	DZ413	0403-001319	DIODE-ZENER;MTZJ4.7C,4.68-4.93V,500mW,DO	
...3	DZ473	0403-000720	DIODE-ZENER;MTZJ9.1B,9.1V,8.57-9.01V,500	
...3	DZ842	0403-000700	DIODE-ZENER;TZP33A,33V,31-35V,1W,DO-41,T	
...3	DZ858	0403-001325	DIODE-ZENER;MTZJ15C,14.35-15.09V,500mW,D	
...3	F801A	3602-000114	FUSE-HOLDER;-,-,30mohm	S.N.A
...3	F801B	3602-000114	FUSE-HOLDER;-,-,30mohm	S.N.A
...3	F804A	3602-000114	FUSE-HOLDER;-,-,30mohm	S.N.A
...3	F804B	3602-000114	FUSE-HOLDER;-,-,30mohm	S.N.A
⚠ ...3	F805	3601-001086	FUSE-AXIAL LEAD;125V,5A,FAST-ACTING,GLAS	
⚠ ...3	F806	3601-001065	FUSE-AXIAL LEAD;125V,3.5A,FAST-ACTING,CE	
⚠ ...3	F854	3601-001086	FUSE-AXIAL LEAD;125V,5A,FAST-ACTING,GLAS	
⚠ ...3	F855	3601-001086	FUSE-AXIAL LEAD;125V,5A,FAST-ACTING,GLAS	
⚠ ...3	F871	3601-001086	FUSE-AXIAL LEAD;125V,5A,FAST-ACTING,GLAS	
...3	L481	3301-000287	CORE-FERRITE BEAD;AA,3.5x1.0x6.0mm,1500,	
...3	L483	2901-000299	FILTER-EMI ON BOARD;-,6A,UL/CSA,-,9x7.5,	
...3	L492	2701-000115	INDUCTOR-AXIAL;10uH,10%,3x7mm	
...3	L493	2901-000297	FILTER-EMI ON BOARD;-,3A,-,-,3.5x5,TP,-	
...3	L494	3301-000287	CORE-FERRITE BEAD;AA,3.5x1.0x6.0mm,1500,	
...3	L495	2901-000297	FILTER-EMI ON BOARD;-,3A,-,-,3.5x5,TP,-	
...3	L806	2901-000297	FILTER-EMI ON BOARD;-,3A,-,-,3.5x5,TP,-	
...3	L807	2901-000297	FILTER-EMI ON BOARD;-,3A,-,-,3.5x5,TP,-	
...3	L808	3301-000287	CORE-FERRITE BEAD;AA,3.5x1.0x6.0mm,1500,	
...3	L810	2901-000297	FILTER-EMI ON BOARD;-,3A,-,-,3.5x5,TP,-	
...3	L811	2901-000297	FILTER-EMI ON BOARD;-,3A,-,-,3.5x5,TP,-	
...3	L812	2901-000297	FILTER-EMI ON BOARD;-,3A,-,-,3.5x5,TP,-	
...3	L813	2901-000297	FILTER-EMI ON BOARD;-,3A,-,-,3.5x5,TP,-	
...3	L814	3301-000287	CORE-FERRITE BEAD;AA,3.5x1.0x6.0mm,1500,	
...3	L815	2901-000297	FILTER-EMI ON BOARD;-,3A,-,-,3.5x5,TP,-	
...3	L816	2901-000297	FILTER-EMI ON BOARD;-,3A,-,-,3.5x5,TP,-	
...3	L831	3301-000287	CORE-FERRITE BEAD;AA,3.5x1.0x6.0mm,1500,	
...3	L832	3301-000287	CORE-FERRITE BEAD;AA,3.5x1.0x6.0mm,1500,	
...3	L851	2901-000297	FILTER-EMI ON BOARD;-,3A,-,-,3.5x5,TP,-	
...3	L857	3301-000287	CORE-FERRITE BEAD;AA,3.5x1.0x6.0mm,1500,	
...3	L859	3301-000287	CORE-FERRITE BEAD;AA,3.5x1.0x6.0mm,1500,	
...3	Q301	0501-000389	TR-SMALL SIGNAL;KSC815,NPN,400mW,TO-92,T	
⚠ ...3	Q432	0501-000283	TR-SMALL SIGNAL;KSA539,PNP,400mW,TO-92,T	
...3	R301	2004-001897	R-METAL(S);43.2Kohm,1%,1/2W,AA,TP,2.5x6.	
...3	R302	2004-001897	R-METAL(S);43.2Kohm,1%,1/2W,AA,TP,2.5x6.	
...3	R303	2004-001984	R-METAL(S);26.7Kohm,1%,1/2W,AA,TP,2.4x6.	
...3	R305	2004-001984	R-METAL(S);26.7Kohm,1%,1/2W,AA,TP,2.4x6.	
...3	R306	2003-001036	R-METAL OXIDE(S);3.3ohm,5%,2W,AF,TP,3.9x	
...3	R307	2003-001036	R-METAL OXIDE(S);3.3ohm,5%,2W,AF,TP,3.9x	
...3	R308	2001-000016	R-CARBON(S);1OHM,5%,1/2W,AA,TP,2.4X6.4MM	
...3	R310	2003-002150	R-METAL OXIDE;270OHM,5%,2W,AG,TP,6X16MM	

Level	Loc. No.	Code No.	Description ; Specification	Remark
...3	R312	2001-000290	R-CARBON;10KOHM,5%,1/8W,AA,TP,1.8X3.2MM	
...3	R313	2001-000761	R-CARBON;430OHM,5%,1/8W,AA,TP,1.8X3.2MM	
...3	R314	2001-000761	R-CARBON;430OHM,5%,1/8W,AA,TP,1.8X3.2MM	
...3	R332	2001-001107	R-CARBON(S);220ohm,5%,1/2W,AA,TP,2.4x6.4	
...3	R333	2001-001107	R-CARBON(S);220ohm,5%,1/2W,AA,TP,2.4x6.4	
...3	R334	2001-001107	R-CARBON(S);220ohm,5%,1/2W,AA,TP,2.4x6.4	
...3	R405	2009-001109	R-TEMPERATURE;240ohm,5%,1/4W,AA,TP,2.3x6	
...3	R406	2004-001983	R-METAL(S);2.49Kohm,1%,1/2W,AA,TP,2.4x6.	
...3	R407	2004-001897	R-METAL(S);43.2Kohm,1%,1/2W,AA,TP,2.5x6.	
...3	R408	2004-001402	R-METAL(S);6.8Kohm,1%,1/2W,AA,TP,2.4x6.4	
...3	R409	2001-001178	R-CARBON(S);680OHM,5%,1/2W,AA,TP,2.4X6.4	
...3	R410	2001-000052	R-CARBON(S);3.3KOHM,5%,1/2W,AA,TP,2.4X6.	
...3	R412	2001-000362	R-CARBON;150OHM,5%,1/8W,AA,TP,1.8X3.2MM	
...3	R419	2001-000290	R-CARBON;10KOHM,5%,1/8W,AA,TP,1.8X3.2MM	
...3	R424	2008-000299	R-FUSIBLE(S);47ohm,5%,2W,AF,TP,3.9x10mm	
...3	R426	2003-002153	R-METAL OXIDE;4.7OHM,5%,2W,AG,TP,6X16MM	
...3	R427	2003-002152	R-METAL OXIDE;1OHM,5%,2W,AG,TP,6X16MM	
...3	R427A	2003-002152	R-METAL OXIDE;1OHM,5%,2W,AG,TP,6X16MM	
...3	R428	2002-001017	R-COMPOSITION;1Kohm,10%,1/2W,AA,TP,3.7x9	
...3	R428A	2002-001017	R-COMPOSITION;1Kohm,10%,1/2W,AA,TP,3.7x9	
...3	R429	2003-000586	R-METAL OXIDE(S);22Kohm,5%,2W,AF,TP,4x12	
...3	R430	2003-000586	R-METAL OXIDE(S);22Kohm,5%,2W,AF,TP,4x12	
...3	R433	2001-001155	R-CARBON(S);5.6KOHM,5%,1/2W,AA,TP,2.4X6.	
...3	R434	2001-001093	R-CARBON(S);2.2KOHM,5%,1/2W,AA,TP,2.4X6.	
...3	R441	2008-000189	R-FUSIBLE;0.47ohm,10%,2W,AA,TP,6x15.5mm	
...3	R444	2003-000995	R-METAL OXIDE(S);3.3Kohm,5%,2W,AF,TP,3.9	
...3	R462	2003-002026	R-METAL OXIDE(S);4.7ohm,5%,1W,AF,TP,2.5x	
...3	R463	2003-001024	R-METAL OXIDE(S);150ohm,5%,2W,AF,TP,3.9x	
...3	R464	2003-002158	R-METAL OXIDE;0.68OHM,5%,1W,AG,TP,4.3X12	
...3	R465	2001-001043	R-CARBON(S);0OHM,5%,1/2W,AA,TP,2.4X6.4MM	
...3	R466	2004-001386	R-METAL(S);16.9Kohm,1%,1/2W,AA,TP,2.4x6.	
...3	R467	2004-001986	R-METAL(S);35.7Kohm,1%,1/2W,AA,TP,2.4x6.	
...3	R468	2001-001122	R-CARBON(S);3.9KOHM,5%,1/2W,AA,TP,2.4X6.	
...3	R469	2004-001390	R-METAL(S);1Kohm,2%,1/2W,AA,TP,2.4x6.4mm	
...3	R470	2001-000028	R-CARBON(S);100OHM,5%,1/2W,AA,TP,2.4X6.4	
...3	R471	2004-002011	R-METAL(S);110Kohm,1%,1/2W,AA,TP,2.4x6.4	
...3	R472	2008-000252	R-FUSIBLE(S);0.47ohm,10%,1/2W,AF,TP,2.5x	
...3	R473	2004-001395	R-METAL(S);330Kohm,2%,1/2W,AA,TP,2.4x6.4	
...3	R486	2003-002014	R-METAL OXIDE(S);0.6OHM,5%,2W,AF,TP,3.9X	
...3	R488	2001-000273	R-CARBON;100KOHM,5%,1/8W,AA,TP,1.8X3.2M	
...3	R808	2001-000002	R-CARBON(S);200KOHM,5%,1/2W,AA,TP,6.4X2.	
...3	R808A	2001-000002	R-CARBON(S);200KOHM,5%,1/2W,AA,TP,6.4X2.	
...3	R810	2002-001010	R-COMPOSITION;1.8Mohm,5%,1/2W,AA,TP,3.7x	
...3	R812	2003-002151	R-METAL OXIDE;18KOHM,5%,2W,AG,TP,6X16MM	
...3	R814	2003-002151	R-METAL OXIDE;18KOHM,5%,2W,AG,TP,6X16MM	
...3	R816	2004-004029	R-METAL(S);10Kohm,1%,1/2W,AA,TP,2.5x6.5m	
...3	R825	2002-001010	R-COMPOSITION;1.8Mohm,5%,1/2W,AA,TP,3.7x	
...3	R832	2001-001178	R-CARBON(S);680OHM,5%,1/2W,AA,TP,2.4X6.4	
...3	R834	2001-001097	R-CARBON(S);2.4KOHM,5%,1/2W,AA,TP,2.4X6.	
...3	R837	2001-001097	R-CARBON(S);2.4KOHM,5%,1/2W,AA,TP,2.4X6.	
...3	R838	2001-001097	R-CARBON(S);2.4KOHM,5%,1/2W,AA,TP,2.4X6.	
...3	R855	2001-001196	R-CARBON(S);9.1KOHM,5%,1/2W,AA,TP,2.4X6.	
...3	R856	2001-001155	R-CARBON(S);5.6KOHM,5%,1/2W,AA,TP,2.4X6.	
...3	R857	2001-001155	R-CARBON(S);5.6KOHM,5%,1/2W,AA,TP,2.4X6.	
...3	R871	2001-001088	R-CARBON(S);1KOHM,5%,1/2W,AA,TP,2.4X6.4M	
...3	R872	2001-001088	R-CARBON(S);1KOHM,5%,1/2W,AA,TP,2.4X6.4M	
...3	R873	2001-001097	R-CARBON(S);2.4KOHM,5%,1/2W,AA,TP,2.4X6.	
...3	R891	2002-001012	R-COMPOSITION;8.2Mohm,5%,1/2W,AA,TP,3.7x	
...3	VR471	2103-001024	VR-SEMI;50Kohm,25%,0.3W,TOP	
..2		AA65-30105B	CLAMP-WIRE;NYLON 66,V2,NTR,25MM,ALL MODE	S.N.A
..2		6003-001023	SCREW-TAPTITE;RWH,+,B,M3,L10,ZPC(YEL),SW	S.N.A

ASSY-PCB,CONV MDL

1	*	AA95-00422B	ASSY-PCB,CONV MDL;-,SP43J5HP,J51A,-,-,-	
..2	C163	2305-000289	C-FILM,MPEF;220nF,5%,63V,TP,-,5mm	
..2	CN101	3711-002709	CONNECTOR-HEADER;NOWALL,12P,1R,2.5MM,ANG	
..2	CN102	3711-002709	CONNECTOR-HEADER;NOWALL,12P,1R,2.5MM,ANG	
⚠ ..2	IC113	1203-000641	IC-RESET;7442,TO-92,3P,-,PLASTIC,-0.3/7	
..2		0202-001004	SOLDER-CREAM;SQ-2030M SZH-1,S63A,D0.04,6	S.N.A
..2		0202-000187	SOLDER-WIRE FLUX;-,RS60S,D1.2,63Sn/37Pb	S.N.A
..2		AA63-00143A	SHIELD-CASE;-,SPTE T0.5,T0.5,ALLMIGHT,CO	S.N.A
..2		AA99-20068A	ASSY-PCB SUB,AUTO; AA95-00422B ,V	S.N.A
...3	C101	2404-000275	C-TA,CHIP;100UF,10%,10V,GP,TP,7343	

Level	Loc. No.	Code No.	Description ; Specification	Remark
...3	C102	2404-000275	C-TA,CHIP;100UF,10%,10V,GP,TP,7343	
...3	C103	2404-000256	C-TA,CHIP;47UF,20%,16V,GP,TP,7343	
...3	C104	2203-000218	C-CERAMIC,CHIP;100nF,20%,50V,Y5V,TP,2012	
...3	C105	2203-000858	C-CERAMIC,CHIP;0.039nF,5%,50V,NP0,TP,201	
...3	C106	2203-000218	C-CERAMIC,CHIP;100nF,20%,50V,Y5V,TP,2012	
...3	C107	2203-000716	C-CERAMIC,CHIP;3.3nF,10%,50V,X7R,TP,2012	
...3	C108	2203-000218	C-CERAMIC,CHIP;100nF,20%,50V,Y5V,TP,2012	
...3	C109	2203-000218	C-CERAMIC,CHIP;100nF,20%,50V,Y5V,TP,2012	
...3	C110	2203-000444	C-CERAMIC,CHIP;1nF,10%,50V,X7R,TP,2012,-	
...3	C111	2203-000218	C-CERAMIC,CHIP;100nF,20%,50V,Y5V,TP,2012	
...3	C112	2203-000683	C-CERAMIC,CHIP;0.027nF,5%,50V,NP0,TP,201	
...3	C113	2203-000683	C-CERAMIC,CHIP;0.027nF,5%,50V,NP0,TP,201	
...3	C114	2203-000218	C-CERAMIC,CHIP;100nF,20%,50V,Y5V,TP,2012	
...3	C115	2203-000218	C-CERAMIC,CHIP;100nF,20%,50V,Y5V,TP,2012	
...3	C116	2203-000218	C-CERAMIC,CHIP;100nF,20%,50V,Y5V,TP,2012	
...3	C117	2203-000218	C-CERAMIC,CHIP;100nF,20%,50V,Y5V,TP,2012	
...3	C118	2203-000218	C-CERAMIC,CHIP;100nF,20%,50V,Y5V,TP,2012	
...3	C119	2203-000218	C-CERAMIC,CHIP;100nF,20%,50V,Y5V,TP,2012	
...3	C120	2203-000218	C-CERAMIC,CHIP;100nF,20%,50V,Y5V,TP,2012	
...3	C121	2203-000218	C-CERAMIC,CHIP;100nF,20%,50V,Y5V,TP,2012	
...3	C122	2203-000218	C-CERAMIC,CHIP;100nF,20%,50V,Y5V,TP,2012	
...3	C123	2203-000218	C-CERAMIC,CHIP;100nF,20%,50V,Y5V,TP,2012	
...3	C124	2203-000218	C-CERAMIC,CHIP;100nF,20%,50V,Y5V,TP,2012	
...3	C125	2203-000218	C-CERAMIC,CHIP;100nF,20%,50V,Y5V,TP,2012	
...3	C126	2203-000218	C-CERAMIC,CHIP;100nF,20%,50V,Y5V,TP,2012	
...3	C127	2203-000218	C-CERAMIC,CHIP;100nF,20%,50V,Y5V,TP,2012	
...3	C128	2203-000218	C-CERAMIC,CHIP;100nF,20%,50V,Y5V,TP,2012	
...3	C129	2203-000218	C-CERAMIC,CHIP;100nF,20%,50V,Y5V,TP,2012	
...3	C130	2203-000218	C-CERAMIC,CHIP;100nF,20%,50V,Y5V,TP,2012	
...3	C131	2203-000218	C-CERAMIC,CHIP;100nF,20%,50V,Y5V,TP,2012	
...3	C132	2203-000408	C-CERAMIC,CHIP;0.18nF,5%,50V,NP0,TP,2012	
...3	C133	2404-001098	C-TA,CHIP;1uF,20%,25V,GP,TP,3216,-	
...3	C134	2203-000218	C-CERAMIC,CHIP;100nF,20%,50V,Y5V,TP,2012	
...3	C135	2203-000716	C-CERAMIC,CHIP;3.3nF,10%,50V,X7R,TP,2012	
...3	C136	2203-000218	C-CERAMIC,CHIP;100nF,20%,50V,Y5V,TP,2012	
...3	C137	2203-000716	C-CERAMIC,CHIP;3.3nF,10%,50V,X7R,TP,2012	
...3	C138	2203-000408	C-CERAMIC,CHIP;0.18nF,5%,50V,NP0,TP,2012	
...3	C139	2203-000218	C-CERAMIC,CHIP;100nF,20%,50V,Y5V,TP,2012	
...3	C140	2404-001098	C-TA,CHIP;1uF,20%,25V,GP,TP,3216,-	
...3	C141	2203-000408	C-CERAMIC,CHIP;0.18nF,5%,50V,NP0,TP,2012	
...3	C142	2404-001098	C-TA,CHIP;1uF,20%,25V,GP,TP,3216,-	
...3	C143	2203-000218	C-CERAMIC,CHIP;100nF,20%,50V,Y5V,TP,2012	
...3	C144	2203-000716	C-CERAMIC,CHIP;3.3nF,10%,50V,X7R,TP,2012	
...3	C145	2203-000218	C-CERAMIC,CHIP;100nF,20%,50V,Y5V,TP,2012	
...3	C146	2203-000716	C-CERAMIC,CHIP;3.3nF,10%,50V,X7R,TP,2012	
...3	C147	2203-000408	C-CERAMIC,CHIP;0.18nF,5%,50V,NP0,TP,2012	
...3	C148	2404-001098	C-TA,CHIP;1uF,20%,25V,GP,TP,3216,-	
...3	C149	2203-000218	C-CERAMIC,CHIP;100nF,20%,50V,Y5V,TP,2012	
...3	C150	2203-000218	C-CERAMIC,CHIP;100nF,20%,50V,Y5V,TP,2012	
...3	C151	2203-000408	C-CERAMIC,CHIP;0.18nF,5%,50V,NP0,TP,2012	
...3	C152	2404-001098	C-TA,CHIP;1uF,20%,25V,GP,TP,3216,-	
...3	C153	2203-000218	C-CERAMIC,CHIP;100nF,20%,50V,Y5V,TP,2012	
...3	C154	2203-000716	C-CERAMIC,CHIP;3.3nF,10%,50V,X7R,TP,2012	
...3	C155	2203-000218	C-CERAMIC,CHIP;100nF,20%,50V,Y5V,TP,2012	
...3	C156	2203-000716	C-CERAMIC,CHIP;3.3nF,10%,50V,X7R,TP,2012	
...3	C157	2203-000408	C-CERAMIC,CHIP;0.18nF,5%,50V,NP0,TP,2012	
...3	C158	2404-001098	C-TA,CHIP;1uF,20%,25V,GP,TP,3216,-	
...3	C159	2203-000218	C-CERAMIC,CHIP;100nF,20%,50V,Y5V,TP,2012	
...3	C160	2203-000218	C-CERAMIC,CHIP;100nF,20%,50V,Y5V,TP,2012	
...3	C161	2404-000256	C-TA,CHIP;47UF,20%,16V,GP,TP,7343	
...3	C162	2404-000256	C-TA,CHIP;47UF,20%,16V,GP,TP,7343	
...3	C164	2404-001229	C-TA,CHIP;4.7uF,20%,25V,GP,TP,3528	
...3	C165	2203-000218	C-CERAMIC,CHIP;100nF,20%,50V,Y5V,TP,2012	
...3	C166	2203-000218	C-CERAMIC,CHIP;100nF,20%,50V,Y5V,TP,2012	
...3	C167	2404-000123	C-TA,CHIP;10uF,20%,16V,-,TP,6032,2.9mm	
...3	C168	2203-000218	C-CERAMIC,CHIP;100nF,20%,50V,Y5V,TP,2012	
...3	C169	2203-000218	C-CERAMIC,CHIP;100nF,20%,50V,Y5V,TP,2012	
...3	C170	2203-000218	C-CERAMIC,CHIP;100nF,20%,50V,Y5V,TP,2012	
...3	C171	2404-001098	C-TA,CHIP;1uF,20%,25V,GP,TP,3216,-	
...3	C172	2404-000256	C-TA,CHIP;47UF,20%,16V,GP,TP,7343	
...3	C173	2404-000256	C-TA,CHIP;47UF,20%,16V,GP,TP,7343	
...3	C174	2404-000256	C-TA,CHIP;47UF,20%,16V,GP,TP,7343	
...3	C201	2203-000408	C-CERAMIC,CHIP;0.18nF,5%,50V,NP0,TP,2012	
...3	C202	2203-000408	C-CERAMIC,CHIP;0.18nF,5%,50V,NP0,TP,2012	
...3	C203	2203-000408	C-CERAMIC,CHIP;0.18nF,5%,50V,NP0,TP,2012	
...3	C204	2203-000408	C-CERAMIC,CHIP;0.18nF,5%,50V,NP0,TP,2012	

Level	Loc. No.	Code No.	Description ; Specification	Remark
...3	C205	2203-000408	C-CERAMIC,CHIP;0.18nF,5%,50V,NP0,TP,2012	
...3	C206	2203-000408	C-CERAMIC,CHIP;0.18nF,5%,50V,NP0,TP,2012	
...3	D101	0401-000160	DIODE-SWITCHING;ISS314,30V,100mA,USC,TP	
...3	D102	0401-000160	DIODE-SWITCHING;ISS314,30V,100mA,USC,TP	
...3	DZ101	0403-001016	DIODE-ZENER;RLZ6.2B,6.2V,5.96-6.27V,400m	
...3	DZ102	0403-001016	DIODE-ZENER;RLZ6.2B,6.2V,5.96-6.27V,400m	
...3	DZ104	0403-001016	DIODE-ZENER;RLZ6.2B,6.2V,5.96-6.27V,400m	
...3	DZ105	0403-001016	DIODE-ZENER;RLZ6.2B,6.2V,5.96-6.27V,400m	
...3	DZ106	0403-001016	DIODE-ZENER;RLZ6.2B,6.2V,5.96-6.27V,400m	
...3	DZ107	0403-001016	DIODE-ZENER;RLZ6.2B,6.2V,5.96-6.27V,400m	
...3	DZ108	0403-001016	DIODE-ZENER;RLZ6.2B,6.2V,5.96-6.27V,400m	
...3	DZ109	0403-001016	DIODE-ZENER;RLZ6.2B,6.2V,5.96-6.27V,400m	
...3	DZ110	0403-001016	DIODE-ZENER;RLZ6.2B,6.2V,5.96-6.27V,400m	
...3	DZ111	0403-001016	DIODE-ZENER;RLZ6.2B,6.2V,5.96-6.27V,400m	
...3	DZ112	0403-001016	DIODE-ZENER;RLZ6.2B,6.2V,5.96-6.27V,400m	
...3	DZ113	0403-001016	DIODE-ZENER;RLZ6.2B,6.2V,5.96-6.27V,400m	
...3	DZ114	0403-001016	DIODE-ZENER;RLZ6.2B,6.2V,5.96-6.27V,400m	
...3	DZ115	0403-001016	DIODE-ZENER;RLZ6.2B,6.2V,5.96-6.27V,400m	
...3	DZ116	0403-001016	DIODE-ZENER;RLZ6.2B,6.2V,5.96-6.27V,400m	
...3	DZ117	0403-001284	DIODE-ZENER;RLZ3.3A,3.16-3.38V,500MW,LL-	
...3	EF101	2901-000229	FILTER-EMI SMD;50V,0.3A,-,22000pF,4.5x3.	
...3	EF102	2901-000229	FILTER-EMI SMD;50V,0.3A,-,22000pF,4.5x3.	
...3	EF104	2901-000226	FILTER-EMI SMD;25V,0.3A,-,100pF,3.2x1.25	
...3	EF105	2901-000226	FILTER-EMI SMD;25V,0.3A,-,100pF,3.2x1.25	
...3	EF106	2901-000226	FILTER-EMI SMD;25V,0.3A,-,100pF,3.2x1.25	
...3	EF107	2901-000226	FILTER-EMI SMD;25V,0.3A,-,100pF,3.2x1.25	
...3	EF108	2901-000226	FILTER-EMI SMD;25V,0.3A,-,100pF,3.2x1.25	
...3	EF109	2901-000226	FILTER-EMI SMD;25V,0.3A,-,100pF,3.2x1.25	
...3	EF110	2901-000226	FILTER-EMI SMD;25V,0.3A,-,100pF,3.2x1.25	
...3	EF111	2901-000226	FILTER-EMI SMD;25V,0.3A,-,100pF,3.2x1.25	
...3	EF112	2901-000226	FILTER-EMI SMD;25V,0.3A,-,100pF,3.2x1.25	
...3	EF113	2901-000226	FILTER-EMI SMD;25V,0.3A,-,100pF,3.2x1.25	
...3	EF114	2901-000226	FILTER-EMI SMD;25V,0.3A,-,100pF,3.2x1.25	
...3	EF115	2901-000226	FILTER-EMI SMD;25V,0.3A,-,100pF,3.2x1.25	
...3	EF116	2901-000226	FILTER-EMI SMD;25V,0.3A,-,100pF,3.2x1.25	
⚠ ...3	IC101	AA13-00071A	IC-ASIC;-,SDC91,QFP,208P,CONV CONTROLL	
⚠ ...3	IC102	0801-001043	IC-CMOS LOGIC;74HC4046,PHASE-LOCKED-LOOP	
⚠ ...3	IC103	AA09-00032A	IC-MCU;TSC87251G2D-OTP,TSC87251G2D-OT	
⚠ ...3	IC104	1103-001167	IC-EEPROM;28C64,8KX8BIT,TSOP,28P,-,120NS	
⚠ ...3	IC105	1201-001520	IC-VIDEO AMP;2210,SOP,8P,150MIL,DUAL,7dB	
⚠ ...3	IC106	1201-001504	IC-OP AMP;072,SOP,8P,150MIL,DUAL,-,PLAST	
⚠ ...3	IC107	1201-001504	IC-OP AMP;072,SOP,8P,150MIL,DUAL,-,PLAST	
⚠ ...3	IC108	1201-001504	IC-OP AMP;072,SOP,8P,150MIL,DUAL,-,PLAST	
⚠ ...3	IC109	0801-001156	IC-CMOS LOGIC;74HC4066,BILATERAL SWITCH,	
⚠ ...3	IC110	0801-001156	IC-CMOS LOGIC;74HC4066,BILATERAL SWITCH,	
⚠ ...3	IC111	1001-000105	IC-ANALOG SWITCH;CD4066BM,BILATERAL CMOS	
⚠ ...3	IC112	1001-000105	IC-ANALOG SWITCH;CD4066BM,BILATERAL CMOS	
...3	PCB	AA41-00188D	PCB-CONVERGENCE MODULE;SVP-43J4M,FR-4,4L	S.N.A
...3	Q101	0501-000280	TR-SMALL SIGNAL;KSA1182,PNP,150mW,SOT-23	
...3	Q102	0501-000342	TR-SMALL SIGNAL;KSC1623-Y,NPN,200mW,SOT-	
...3	Q103	0501-000342	TR-SMALL SIGNAL;KSC1623-Y,NPN,200mW,SOT-	
...3	Q104	0501-000280	TR-SMALL SIGNAL;KSA1182,PNP,150mW,SOT-23	
...3	Q105	0501-000342	TR-SMALL SIGNAL;KSC1623-Y,NPN,200mW,SOT-	
...3	Q106	0501-000342	TR-SMALL SIGNAL;KSC1623-Y,NPN,200mW,SOT-	
...3	Q107	0501-000342	TR-SMALL SIGNAL;KSC1623-Y,NPN,200mW,SOT-	
...3	Q108	0501-000280	TR-SMALL SIGNAL;KSA1182,PNP,150mW,SOT-23	
...3	Q109	0505-000257	FET-SILICON;2SK217,N,-,20mA,-,150mW,SOT-	S.N.A
...3	Q110	0505-000257	FET-SILICON;2SK217,N,-,20mA,-,150mW,SOT-	S.N.A
...3	Q111	0505-000257	FET-SILICON;2SK217,N,-,20mA,-,150mW,SOT-	S.N.A
...3	Q112	0505-000257	FET-SILICON;2SK217,N,-,20mA,-,150mW,SOT-	S.N.A
...3	Q113	0505-000257	FET-SILICON;2SK217,N,-,20mA,-,150mW,SOT-	S.N.A
...3	Q114	0505-000257	FET-SILICON;2SK217,N,-,20mA,-,150mW,SOT-	S.N.A
...3	R101	2007-000881	R-CHIP;4.7OHM,5%,1/10W,DA,TP,2012	
...3	R102	2007-000881	R-CHIP;4.7OHM,5%,1/10W,DA,TP,2012	
...3	R103	2007-000881	R-CHIP;4.7OHM,5%,1/10W,DA,TP,2012	
...3	R104	2007-000881	R-CHIP;4.7OHM,5%,1/10W,DA,TP,2012	
...3	R105	2007-000415	R-CHIP;15OHM,5%,1/10W,DA,TP,2012	
...3	R106	2007-000947	R-CHIP;47OHM,5%,1/10W,DA,TP,2012	
...3	R107	2007-000282	R-CHIP;100KOHM,5%,1/10W,DA,TP,2012	
...3	R108	2007-000872	R-CHIP;4.7KOHM,5%,1/10W,DA,TP,2012	
...3	R109	2007-000493	R-CHIP;2.2KOHM,5%,1/10W,DA,TP,2012	
...3	R110	2007-000221	R-CHIP;1.2KOHM,5%,1/10W,DA,TP,2012	
...3	R111	2007-000380	R-CHIP;13KOHM,5%,1/10W,DA,TP,2012	
...3	R112	2007-000468	R-CHIP;1KOHM,5%,1/10W,DA,TP,2012	
...3	R113	2007-001097	R-CHIP;62KOHM,5%,1/10W,DA,TP,2012	
...3	R114	2007-000468	R-CHIP;1KOHM,5%,1/10W,DA,TP,2012	

Level	Loc. No.	Code No.	Description ; Specification	Remark
...3	R116	2007-000468	R-CHIP;1KOHM,5%,1/10W,DA,TP,2012	
...3	R117	2007-000468	R-CHIP;1KOHM,5%,1/10W,DA,TP,2012	
...3	R118	2007-000468	R-CHIP;1KOHM,5%,1/10W,DA,TP,2012	
...3	R119	2007-000468	R-CHIP;1KOHM,5%,1/10W,DA,TP,2012	
...3	R120	2007-000401	R-CHIP;150OHM,5%,1/10W,DA,TP,2012	
...3	R121	2007-000023	R-CHIP;120OHM,5%,1/10W,DA,TP,2012	
...3	R122	2007-000468	R-CHIP;1KOHM,5%,1/10W,DA,TP,2012	
...3	R123	2007-000401	R-CHIP;150OHM,5%,1/10W,DA,TP,2012	
...3	R124	2007-000468	R-CHIP;1KOHM,5%,1/10W,DA,TP,2012	
...3	R125	2007-000401	R-CHIP;150OHM,5%,1/10W,DA,TP,2012	
...3	R126	2007-000401	R-CHIP;150OHM,5%,1/10W,DA,TP,2012	
...3	R127	2007-000401	R-CHIP;150OHM,5%,1/10W,DA,TP,2012	
...3	R128	2007-000290	R-CHIP;100OHM,5%,1/10W,DA,TP,2012	
...3	R129	2007-000465	R-CHIP;1KOHM,1%,1/10W,DA,TP,2012	
...3	R130	2007-000868	R-CHIP;4.7KOHM,1%,1/10W,DA,TP,2012	
...3	R131	2007-000981	R-CHIP;5.6KOHM,5%,1/10W,DA,TP,2012	
...3	R132	2007-000465	R-CHIP;1KOHM,1%,1/10W,DA,TP,2012	
...3	R133	2007-000868	R-CHIP;4.7KOHM,1%,1/10W,DA,TP,2012	
...3	R134	2007-000981	R-CHIP;5.6KOHM,5%,1/10W,DA,TP,2012	
...3	R135	2007-000290	R-CHIP;100OHM,5%,1/10W,DA,TP,2012	
...3	R136	2007-000290	R-CHIP;100OHM,5%,1/10W,DA,TP,2012	
...3	R137	2007-000465	R-CHIP;1KOHM,1%,1/10W,DA,TP,2012	
...3	R138	2007-000868	R-CHIP;4.7KOHM,1%,1/10W,DA,TP,2012	
...3	R139	2007-000981	R-CHIP;5.6KOHM,5%,1/10W,DA,TP,2012	
...3	R140	2007-000465	R-CHIP;1KOHM,1%,1/10W,DA,TP,2012	
...3	R141	2007-000868	R-CHIP;4.7KOHM,1%,1/10W,DA,TP,2012	
...3	R142	2007-000981	R-CHIP;5.6KOHM,5%,1/10W,DA,TP,2012	
...3	R143	2007-000290	R-CHIP;100OHM,5%,1/10W,DA,TP,2012	
...3	R144	2007-000290	R-CHIP;100OHM,5%,1/10W,DA,TP,2012	
...3	R145	2007-000465	R-CHIP;1KOHM,1%,1/10W,DA,TP,2012	
...3	R146	2007-000868	R-CHIP;4.7KOHM,1%,1/10W,DA,TP,2012	
...3	R147	2007-000981	R-CHIP;5.6KOHM,5%,1/10W,DA,TP,2012	
...3	R148	2007-000465	R-CHIP;1KOHM,1%,1/10W,DA,TP,2012	
...3	R149	2007-000868	R-CHIP;4.7KOHM,1%,1/10W,DA,TP,2012	
...3	R150	2007-000981	R-CHIP;5.6KOHM,5%,1/10W,DA,TP,2012	
...3	R151	2007-000290	R-CHIP;100OHM,5%,1/10W,DA,TP,2012	
...3	R152	2007-000282	R-CHIP;100KOHM,5%,1/10W,DA,TP,2012	
...3	R153	2007-000872	R-CHIP;4.7KOHM,5%,1/10W,DA,TP,2012	
...3	R154	2007-000774	R-CHIP;33KOHM,5%,1/10W,DA,TP,2012	
...3	R155	2007-000300	R-CHIP;10KOHM,5%,1/10W,DA,TP,2012	
...3	R156	2007-001055	R-CHIP;6.2KOHM,5%,1/10W,DA,TP,2012	
...3	R157	2007-000671	R-CHIP;2KOHM,5%,1/10W,DA,TP,2012	
...3	R158	2007-000468	R-CHIP;1KOHM,5%,1/10W,DA,TP,2012	
...3	R159	2007-001166	R-CHIP;75OHM,5%,1/10W,DA,TP,2012	
...3	R160	2007-000766	R-CHIP;330OHM,5%,1/10W,DA,TP,2012	
...3	R161	2007-000290	R-CHIP;100OHM,5%,1/10W,DA,TP,2012	
...3	R162	2007-000290	R-CHIP;100OHM,5%,1/10W,DA,TP,2012	
...3	R163	2007-000290	R-CHIP;100OHM,5%,1/10W,DA,TP,2012	
...3	R164	2007-000468	R-CHIP;1KOHM,5%,1/10W,DA,TP,2012	
...3	R165	2007-000468	R-CHIP;1KOHM,5%,1/10W,DA,TP,2012	
...3	R166	2007-000468	R-CHIP;1KOHM,5%,1/10W,DA,TP,2012	
...3	R167	2007-000468	R-CHIP;1KOHM,5%,1/10W,DA,TP,2012	
...3	R168	2007-000468	R-CHIP;1KOHM,5%,1/10W,DA,TP,2012	
...3	R169	2007-000703	R-CHIP;3.6KOHM,5%,1/10W,DA,TP,2012	
...3	R170	2007-000468	R-CHIP;1KOHM,5%,1/10W,DA,TP,2012	
...3	R171	2007-000221	R-CHIP;1.2KOHM,5%,1/10W,DA,TP,2012	
...3	R172	2007-000642	R-CHIP;270OHM,5%,1/10W,DA,TP,2012	
...3	R173	2007-000030	R-CHIP;560OHM,5%,1/10W,DA,TP,2012	
...3	R174	2007-000030	R-CHIP;560OHM,5%,1/10W,DA,TP,2012	
...3	R175	2007-000282	R-CHIP;100KOHM,5%,1/10W,DA,TP,2012	
...3	R176	2007-000872	R-CHIP;4.7KOHM,5%,1/10W,DA,TP,2012	
...3	R177	2007-000872	R-CHIP;4.7KOHM,5%,1/10W,DA,TP,2012	
...3	R178	2007-000728	R-CHIP;300OHM,5%,1/10W,DA,TP,2012	
...3	R179	2007-000728	R-CHIP;300OHM,5%,1/10W,DA,TP,2012	
...3	R180	2007-000728	R-CHIP;300OHM,5%,1/10W,DA,TP,2012	
...3	R181	2007-000728	R-CHIP;300OHM,5%,1/10W,DA,TP,2012	
...3	R182	2007-000728	R-CHIP;300OHM,5%,1/10W,DA,TP,2012	
...3	R183	2007-000728	R-CHIP;300OHM,5%,1/10W,DA,TP,2012	
...3	R184	2007-000830	R-CHIP;39KOHM,5%,1/10W,DA,TP,2012	
...3	R201	2007-000029	R-CHIP;0OHM,5%,1/10W,DA,TP,2012	
...3	R203	2007-000565	R-CHIP;220KOHM,5%,1/10W,DA,TP,2012	
...3	R204	2007-000565	R-CHIP;220KOHM,5%,1/10W,DA,TP,2012	
...3	R205	2007-000565	R-CHIP;220KOHM,5%,1/10W,DA,TP,2012	
...3	R206	2007-000565	R-CHIP;220KOHM,5%,1/10W,DA,TP,2012	
...3	R207	2007-000565	R-CHIP;220KOHM,5%,1/10W,DA,TP,2012	
...3	R208	2007-000565	R-CHIP;220KOHM,5%,1/10W,DA,TP,2012	
...3	X101	2801-003860	CRYSTAL-SMD;24MHz,30ppm,28-ABV,20pF,50oh	

ASSY-PCB,TERMINAL

Level	Loc. No.	Code No.	Description ; Specification	Remark
1	*	AA95-00219D	ASSY-PCB,TERMINAL;-,SP43J5HF,J51A,-,-,1	
..2	CNT01	3711-003630	CONNECTOR-HEADER;BOX,32P,2R,2.54mm,ANGLE	
..2	CNT02	3711-003630	CONNECTOR-HEADER;BOX,32P,2R,2.54mm,ANGLE	
..2	CNT03	3711-003601	CONNECTOR-HEADER;BOX,12P,1R,2.5mm,ANGLE,	
⚠ ..2	IC703	0904-001121	IC-I/O SUPPORT CHIP;8574,8BIT,DIP,16P,30	
⚠ ..2	IC704	1001-001022	IC-ANALOG SWITCH;TDA8601,BLANKING,DIP,16	
⚠ ..2	IC705	0801-000213	IC-CMOS LOGIC;4052,MULTIPLEXER,DIP,16P,3	
..2	JKV01	3722-000498	JACK-SCART;21P,-,SN,BLK,NO	
..2	JKV02	3722-001039	JACK-RCA;9P,3.4mm,SN,BLK,#16-22	
..2	JKV03	3722-001382	JACK-RCA;5P(9P),3.4MM,NI,R/W/G/BLUE,-	
..2	JKV04	3722-001350	JACK-RCA;7P/9P,3.4MM,NI,BLK,-	
..2	JKV05	3701-001013	CONNECTOR-DSUB;15P,3R,FEMALE,STRAIGHT,AU	
..2	JKV06	3701-001013	CONNECTOR-DSUB;15P,3R,FEMALE,STRAIGHT,AU	
..2	JKV07	3722-000544	JACK-VHS;4P,11.5mm,AG,BLK,N	
..2	RN701	2011-000160	R-NETWORK;10Kohm,5%,1/8W,A,SIP,9P,TP	
..2		AA65-30105A	CLAMP-WIRE;NYLON 66,V2,NTR,15MM,ALL MODE	S.N.A
..2		AA99-20079E	ASSY-PCB SUB,AUTO; AA95-00219D ,V	S.N.A
...3	C701	2401-002009	C-AL;100uF,20%,16V,GP,TP,6.3x7,5	
...3	C702	2203-000218	C-CERAMIC,CHIP;100nF,20%,50V,Y5V,TP,2012	
...3	C703	2401-002009	C-AL;100uF,20%,16V,GP,TP,6.3x7,5	
...3	C704	2203-000818	C-CERAMIC,CHIP;0.033nF,5%,50V,NP0,TP,201	
...3	C705	2203-000818	C-CERAMIC,CHIP;0.033nF,5%,50V,NP0,TP,201	
...3	C706	2203-000979	C-CERAMIC,CHIP;47nF,10%,50V,X7R,TP,2012	
...3	C707	2203-000979	C-CERAMIC,CHIP;47nF,10%,50V,X7R,TP,2012	
...3	C708	2203-000979	C-CERAMIC,CHIP;47nF,10%,50V,X7R,TP,2012	
...3	C709	2203-000979	C-CERAMIC,CHIP;47nF,10%,50V,X7R,TP,2012	
...3	C710	2203-000979	C-CERAMIC,CHIP;47nF,10%,50V,X7R,TP,2012	
...3	C711	2203-000979	C-CERAMIC,CHIP;47nF,10%,50V,X7R,TP,2012	
...3	C712	2203-000218	C-CERAMIC,CHIP;100nF,20%,50V,Y5V,TP,2012	
...3	C713	2203-000979	C-CERAMIC,CHIP;47nF,10%,50V,X7R,TP,2012	
...3	C714	2203-000979	C-CERAMIC,CHIP;47nF,10%,50V,X7R,TP,2012	
...3	C715	2203-000979	C-CERAMIC,CHIP;47nF,10%,50V,X7R,TP,2012	
...3	C716	2401-002009	C-AL;100uF,20%,16V,GP,TP,6.3x7,5	
...3	C717	2203-000218	C-CERAMIC,CHIP;100nF,20%,50V,Y5V,TP,2012	
...3	C718	2203-000979	C-CERAMIC,CHIP;47nF,10%,50V,X7R,TP,2012	
...3	C719	2203-000979	C-CERAMIC,CHIP;47nF,10%,50V,X7R,TP,2012	
...3	C720	2203-000979	C-CERAMIC,CHIP;47nF,10%,50V,X7R,TP,2012	
...3	C721	2203-000979	C-CERAMIC,CHIP;47nF,10%,50V,X7R,TP,2012	
...3	C722	2203-000979	C-CERAMIC,CHIP;47nF,10%,50V,X7R,TP,2012	
...3	C723	2203-000218	C-CERAMIC,CHIP;100nF,20%,50V,Y5V,TP,2012	
...3	C724	2203-000979	C-CERAMIC,CHIP;47nF,10%,50V,X7R,TP,2012	
...3	C725	2203-000218	C-CERAMIC,CHIP;100nF,20%,50V,Y5V,TP,2012	
...3	C726	2203-000218	C-CERAMIC,CHIP;100nF,20%,50V,Y5V,TP,2012	
...3	C727	2203-000979	C-CERAMIC,CHIP;47nF,10%,50V,X7R,TP,2012	
...3	C730	2401-002299	C-AL;4.7uF,20%,50V,GP,TP,5x7,5	
...3	C731	2401-002299	C-AL;4.7uF,20%,50V,GP,TP,5x7,5	
...3	C732	2203-000444	C-CERAMIC,CHIP;1nF,10%,50V,X7R,TP,2012,-	
...3	C733	2203-000444	C-CERAMIC,CHIP;1nF,10%,50V,X7R,TP,2012,-	
...3	C734	2203-000444	C-CERAMIC,CHIP;1nF,10%,50V,X7R,TP,2012,-	
...3	C735	2203-000444	C-CERAMIC,CHIP;1nF,10%,50V,X7R,TP,2012,-	
...3	C736	2203-000444	C-CERAMIC,CHIP;1nF,10%,50V,X7R,TP,2012,-	
...3	C737	2203-000444	C-CERAMIC,CHIP;1nF,10%,50V,X7R,TP,2012,-	
...3	C740	2401-001840	C-AL;100uF,20%,16V,GP,TP,6.3x11,5	
...3	C741	2203-000218	C-CERAMIC,CHIP;100nF,20%,50V,Y5V,TP,2012	
...3	C742	2401-001840	C-AL;100uF,20%,16V,GP,TP,6.3x11,5	
...3	C743	2203-000218	C-CERAMIC,CHIP;100nF,20%,50V,Y5V,TP,2012	
...3	C744	2203-000575	C-CERAMIC,CHIP;220NF,10%,25V,X7R,TP,2012	
...3	C745	2203-000575	C-CERAMIC,CHIP;220NF,10%,25V,X7R,TP,2012	
...3	C746	2203-000575	C-CERAMIC,CHIP;220NF,10%,25V,X7R,TP,2012	
...3	C747	2203-000575	C-CERAMIC,CHIP;220NF,10%,25V,X7R,TP,2012	
...3	C748	2203-000575	C-CERAMIC,CHIP;220NF,10%,25V,X7R,TP,2012	
...3	C749	2203-000575	C-CERAMIC,CHIP;220NF,10%,25V,X7R,TP,2012	
...3	C760	2401-000667	C-AL;2.2uF,20%,50V,WT,TP,5x11,5	
...3	C761	2401-000667	C-AL;2.2uF,20%,50V,WT,TP,5x11,5	
...3	C762	2401-000667	C-AL;2.2uF,20%,50V,WT,TP,5x11,5	
...3	C763	2401-000667	C-AL;2.2uF,20%,50V,WT,TP,5x11,5	
...3	C764	2401-000667	C-AL;2.2uF,20%,50V,WT,TP,5x11,5	
...3	C765	2401-000667	C-AL;2.2uF,20%,50V,WT,TP,5x11,5	
...3	C766	2401-000667	C-AL;2.2uF,20%,50V,WT,TP,5x11,5	
...3	C767	2401-000667	C-AL;2.2uF,20%,50V,WT,TP,5x11,5	
...3	C768	2203-000979	C-CERAMIC,CHIP;47nF,10%,50V,X7R,TP,2012	
...3	C769	2203-000979	C-CERAMIC,CHIP;47nF,10%,50V,X7R,TP,2012	
...3	C770	2203-000683	C-CERAMIC,CHIP;0.027nF,5%,50V,NP0,TP,201	

Level	Loc. No.	Code No.	Description ; Specification	Remark
...3	C771	2203-000683	C-CERAMIC,CHIP;0.027nF,5%,50V,NP0,TP,201	
...3	C772	2203-000683	C-CERAMIC,CHIP;0.027nF,5%,50V,NP0,TP,201	
...3	C773	2203-000239	C-CERAMIC,CHIP;0.1nF,5%,50V,NP0,TP,2012	
...3	C774	2203-000239	C-CERAMIC,CHIP;0.1nF,5%,50V,NP0,TP,2012	
...3	C775	2203-000444	C-CERAMIC,CHIP;1nF,10%,50V,X7R,TP,2012,-	
...3	C776	2203-000444	C-CERAMIC,CHIP;1nF,10%,50V,X7R,TP,2012,-	
...3	C777	2401-001496	C-AL;47uF,20%,16V,GP,TP,5x7,5	
...3	C780	2401-000360	C-AL;100uF,20%,50V,GP,TP,8x11.5,5	
...3	C782	2401-000471	C-AL;10uF,20%,50V,BP,TP,5x11,5mm	
...3	C783	2401-000471	C-AL;10uF,20%,50V,BP,TP,5x11,5mm	
...3	DZ701	0403-000314	DIODE-ZENER;RLZJ9.1B,9.1V,8.80-9.30V,400	
...3	DZ702	0403-000314	DIODE-ZENER;RLZJ9.1B,9.1V,8.80-9.30V,400	
...3	DZ703	0403-000314	DIODE-ZENER;RLZJ9.1B,9.1V,8.80-9.30V,400	
...3	DZ704	0403-001117	DIODE-ZENER;RLZ12B,5%,500mW,LL-34,TP	
...3	DZ705	0403-000620	DIODE-ZENER;RLZ5.6B,5.6V,5.45-5.73V,400m	
⚠ ...3	IC701	1001-001030	IC-VIDEO SWITCH;TDA6920X,-,SOP,28P,300MI	
⚠ ...3	IC702	1001-001030	IC-VIDEO SWITCH;TDA6920X,-,SOP,28P,300MI	
...3	J701	2007-000029	R-CHIP;0OHM,5%,1/10W,DA,TP,2012	
...3	J702	2007-000029	R-CHIP;0OHM,5%,1/10W,DA,TP,2012	
...3	L701	2702-001094	INDUCTOR-RADIAL;10uH,10%,6x4mm	
...3	L702	2702-001094	INDUCTOR-RADIAL;10uH,10%,6x4mm	
...3	L703	2702-001094	INDUCTOR-RADIAL;10uH,10%,6x4mm	
...3	L704	2702-001094	INDUCTOR-RADIAL;10uH,10%,6x4mm	
...3	L705	2702-001094	INDUCTOR-RADIAL;10uH,10%,6x4mm	
...3	L706	2702-001094	INDUCTOR-RADIAL;10uH,10%,6x4mm	
...3	L707	2702-001094	INDUCTOR-RADIAL;10uH,10%,6x4mm	
...3	L708	2702-001094	INDUCTOR-RADIAL;10uH,10%,6x4mm	
...3	L709	2702-001094	INDUCTOR-RADIAL;10uH,10%,6x4mm	
...3	L710	2702-001094	INDUCTOR-RADIAL;10uH,10%,6x4mm	
...3	L719	2702-001094	INDUCTOR-RADIAL;10uH,10%,6x4mm	
...3	L720	2702-001094	INDUCTOR-RADIAL;10uH,10%,6x4mm	
...3	L721	2702-001094	INDUCTOR-RADIAL;10uH,10%,6x4mm	
...3	L722	2702-001094	INDUCTOR-RADIAL;10uH,10%,6x4mm	
...3	L723	2702-001094	INDUCTOR-RADIAL;10uH,10%,6x4mm	
...3	L724	2702-001094	INDUCTOR-RADIAL;10uH,10%,6x4mm	
...3	L725	2702-001094	INDUCTOR-RADIAL;10uH,10%,6x4mm	
...3	L726	2702-001094	INDUCTOR-RADIAL;10uH,10%,6x4mm	
...3	PCB	AA41-00076B	PCB-AV TERMINAL;SP43J5HF,FR-4,2L,B,1.6T,	S.N.A
...3	Q701	0501-000727	TR-SMALL SIGNAL;BC848C,NPN,310mW,SOT-23,	
...3	Q702	0501-000727	TR-SMALL SIGNAL;BC848C,NPN,310mW,SOT-23,	
...3	Q703	0501-000727	TR-SMALL SIGNAL;BC848C,NPN,310mW,SOT-23,	
...3	Q704	0501-000727	TR-SMALL SIGNAL;BC848C,NPN,310mW,SOT-23,	
...3	Q705	0501-000727	TR-SMALL SIGNAL;BC848C,NPN,310mW,SOT-23,	
...3	Q706	0501-000727	TR-SMALL SIGNAL;BC848C,NPN,310mW,SOT-23,	
...3	Q707	0501-000727	TR-SMALL SIGNAL;BC848C,NPN,310mW,SOT-23,	
...3	Q708	0501-000727	TR-SMALL SIGNAL;BC848C,NPN,310mW,SOT-23,	
...3	Q709	0501-000727	TR-SMALL SIGNAL;BC848C,NPN,310mW,SOT-23,	
...3	Q710	0501-000727	TR-SMALL SIGNAL;BC848C,NPN,310mW,SOT-23,	
...3	Q711	0501-000727	TR-SMALL SIGNAL;BC848C,NPN,310mW,SOT-23,	
...3	Q712	0501-000727	TR-SMALL SIGNAL;BC848C,NPN,310mW,SOT-23,	
...3	Q713	0501-000727	TR-SMALL SIGNAL;BC848C,NPN,310mW,SOT-23,	
...3	R701	2007-000290	R-CHIP;100OHM,5%,1/10W,DA,TP,2012	
...3	R702	2007-000300	R-CHIP;10KOHM,5%,1/10W,DA,TP,2012	
...3	R703	2007-000468	R-CHIP;1KOHM,5%,1/10W,DA,TP,2012	
...3	R704	2007-000511	R-CHIP;2.4KOHM,5%,1/10W,DA,TP,2012	
...3	R705	2007-001166	R-CHIP;75OHM,5%,1/10W,DA,TP,2012	
...3	R706	2007-001166	R-CHIP;75OHM,5%,1/10W,DA,TP,2012	
...3	R708	2007-000290	R-CHIP;100OHM,5%,1/10W,DA,TP,2012	
...3	R709	2007-000290	R-CHIP;100OHM,5%,1/10W,DA,TP,2012	
...3	R710	2007-000290	R-CHIP;100OHM,5%,1/10W,DA,TP,2012	
...3	R711	2007-001166	R-CHIP;75OHM,5%,1/10W,DA,TP,2012	
...3	R712	2007-000290	R-CHIP;100OHM,5%,1/10W,DA,TP,2012	
...3	R713	2007-000290	R-CHIP;100OHM,5%,1/10W,DA,TP,2012	
...3	R714	2007-000290	R-CHIP;100OHM,5%,1/10W,DA,TP,2012	
...3	R715	2007-000290	R-CHIP;100OHM,5%,1/10W,DA,TP,2012	
...3	R716	2007-000300	R-CHIP;10KOHM,5%,1/10W,DA,TP,2012	
...3	R717	2007-000401	R-CHIP;150OHM,5%,1/10W,DA,TP,2012	
...3	R718	2007-000300	R-CHIP;10KOHM,5%,1/10W,DA,TP,2012	
...3	R719	2007-000468	R-CHIP;1KOHM,5%,1/10W,DA,TP,2012	
...3	R720	2007-000511	R-CHIP;2.4KOHM,5%,1/10W,DA,TP,2012	
...3	R721	2007-000290	R-CHIP;100OHM,5%,1/10W,DA,TP,2012	
...3	R722	2007-001166	R-CHIP;75OHM,5%,1/10W,DA,TP,2012	
...3	R723	2007-000290	R-CHIP;100OHM,5%,1/10W,DA,TP,2012	
...3	R724	2007-000290	R-CHIP;100OHM,5%,1/10W,DA,TP,2012	
...3	R725	2007-001166	R-CHIP;75OHM,5%,1/10W,DA,TP,2012	
...3	R726	2007-001166	R-CHIP;75OHM,5%,1/10W,DA,TP,2012	
...3	R727	2007-001166	R-CHIP;75OHM,5%,1/10W,DA,TP,2012	
...3	R728	2007-001166	R-CHIP;75OHM,5%,1/10W,DA,TP,2012	
...3	R729	2007-001166	R-CHIP;75OHM,5%,1/10W,DA,TP,2012	
...3	R730	2007-000282	R-CHIP;100KOHM,5%,1/10W,DA,TP,2012	
...3	R731	2007-000282	R-CHIP;100KOHM,5%,1/10W,DA,TP,2012	
...3	R732	2007-000282	R-CHIP;100KOHM,5%,1/10W,DA,TP,2012	
...3	R733	2007-000282	R-CHIP;100KOHM,5%,1/10W,DA,TP,2012	
...3	R734	2007-000941	R-CHIP;47KOHM,5%,1/10W,DA,TP,2012	
...3	R735	2007-000941	R-CHIP;47KOHM,5%,1/10W,DA,TP,2012	
...3	R736	2007-001166	R-CHIP;75OHM,5%,1/10W,DA,TP,2012	
...3	R737	2007-000766	R-CHIP;330OHM,5%,1/10W,DA,TP,2012	
...3	R740	2007-000468	R-CHIP;1KOHM,5%,1/10W,DA,TP,2012	
...3	R741	2007-000468	R-CHIP;1KOHM,5%,1/10W,DA,TP,2012	
...3	R742	2007-000468	R-CHIP;1KOHM,5%,1/10W,DA,TP,2012	
...3	R743	2007-000468	R-CHIP;1KOHM,5%,1/10W,DA,TP,2012	
...3	R744	2007-000468	R-CHIP;1KOHM,5%,1/10W,DA,TP,2012	
...3	R745	2007-000468	R-CHIP;1KOHM,5%,1/10W,DA,TP,2012	
...3	R746	2007-000468	R-CHIP;1KOHM,5%,1/10W,DA,TP,2012	
...3	R748	2007-000872	R-CHIP;4.7KOHM,5%,1/10W,DA,TP,2012	
...3	R749	2007-000029	R-CHIP;0OHM,5%,1/10W,DA,TP,2012	
...3	R750	2007-000572	R-CHIP;220OHM,5%,1/10W,DA,TP,2012	
...3	R751	2007-000029	R-CHIP;0OHM,5%,1/10W,DA,TP,2012	
...3	R752	2007-000572	R-CHIP;220OHM,5%,1/10W,DA,TP,2012	
...3	R753	2007-000029	R-CHIP;0OHM,5%,1/10W,DA,TP,2012	
...3	R754	2007-000572	R-CHIP;220OHM,5%,1/10W,DA,TP,2012	
...3	R755	2007-000029	R-CHIP;0OHM,5%,1/10W,DA,TP,2012	
...3	R756	2007-000964	R-CHIP;5.1KOHM,5%,1/10W,DA,TP,2012	
...3	R757	2007-000468	R-CHIP;1KOHM,5%,1/10W,DA,TP,2012	
...3	R758	2007-000872	R-CHIP;4.7KOHM,5%,1/10W,DA,TP,2012	
...3	R759	2007-000872	R-CHIP;4.7KOHM,5%,1/10W,DA,TP,2012	
...3	R760	2007-000290	R-CHIP;100OHM,5%,1/10W,DA,TP,2012	
...3	R761	2007-000221	R-CHIP;1.2KOHM,5%,1/10W,DA,TP,2012	
...3	R762	2007-000290	R-CHIP;100OHM,5%,1/10W,DA,TP,2012	
...3	R763	2007-000290	R-CHIP;100OHM,5%,1/10W,DA,TP,2012	
...3	R764	2007-000221	R-CHIP;1.2KOHM,5%,1/10W,DA,TP,2012	
...3	R765	2007-000290	R-CHIP;100OHM,5%,1/10W,DA,TP,2012	
...3	R766	2007-000290	R-CHIP;100OHM,5%,1/10W,DA,TP,2012	
...3	R767	2007-000290	R-CHIP;100OHM,5%,1/10W,DA,TP,2012	
...3	R768	2007-000290	R-CHIP;100OHM,5%,1/10W,DA,TP,2012	
...3	R769	2007-000290	R-CHIP;100OHM,5%,1/10W,DA,TP,2012	
...3	R770	2007-000766	R-CHIP;330OHM,5%,1/10W,DA,TP,2012	
...3	R771	2007-001166	R-CHIP;75OHM,5%,1/10W,DA,TP,2012	
...3	R772	2007-001166	R-CHIP;75OHM,5%,1/10W,DA,TP,2012	
...3	R773	2007-001166	R-CHIP;75OHM,5%,1/10W,DA,TP,2012	
...3	R774	2007-001166	R-CHIP;75OHM,5%,1/10W,DA,TP,2012	
...3	R775	2007-001166	R-CHIP;75OHM,5%,1/10W,DA,TP,2012	
...3	R776	2007-001166	R-CHIP;75OHM,5%,1/10W,DA,TP,2012	
...3	R777	2007-000781	R-CHIP;33OHM,5%,1/10W,DA,TP,2012	
...3	R778	2007-000781	R-CHIP;33OHM,5%,1/10W,DA,TP,2012	
...3	R779	2007-001100	R-CHIP;62OHM,5%,1/10W,DA,TP,2012	
...3	R780	2007-001100	R-CHIP;62OHM,5%,1/10W,DA,TP,2012	
...3	R781	2007-001100	R-CHIP;62OHM,5%,1/10W,DA,TP,2012	
...3	R782	2007-000300	R-CHIP;10KOHM,5%,1/10W,DA,TP,2012	
...3	R783	2007-000300	R-CHIP;10KOHM,5%,1/10W,DA,TP,2012	
...3	R784	2007-000300	R-CHIP;10KOHM,5%,1/10W,DA,TP,2012	
...3	R785	2007-000872	R-CHIP;4.7KOHM,5%,1/10W,DA,TP,2012	
...3	R786	2007-000290	R-CHIP;100OHM,5%,1/10W,DA,TP,2012	
...3	R787	2007-000290	R-CHIP;100OHM,5%,1/10W,DA,TP,2012	
...3	R788	2007-000468	R-CHIP;1KOHM,5%,1/10W,DA,TP,2012	
...3	R791	2007-000290	R-CHIP;100OHM,5%,1/10W,DA,TP,2012	
...3	R792	2007-000290	R-CHIP;100OHM,5%,1/10W,DA,TP,2012	
...3	R793	2007-000290	R-CHIP;100OHM,5%,1/10W,DA,TP,2012	
...3	R794	2007-000290	R-CHIP;100OHM,5%,1/10W,DA,TP,2012	
...3	R795	2007-001155	R-CHIP;750OHM,5%,1/10W,DA,TP,2012	
...3	R796	2007-000282	R-CHIP;100KOHM,5%,1/10W,DA,TP,2012	
...3	R797	2007-001155	R-CHIP;750OHM,5%,1/10W,DA,TP,2012	
...3	R798	2007-000282	R-CHIP;100KOHM,5%,1/10W,DA,TP,2012	
...3	R799	2007-000468	R-CHIP;1KOHM,5%,1/10W,DA,TP,2012	
...3	R800	2007-001166	R-CHIP;75OHM,5%,1/10W,DA,TP,2012	
...3	R801	2007-001166	R-CHIP;75OHM,5%,1/10W,DA,TP,2012	
...3	R802	2007-001166	R-CHIP;75OHM,5%,1/10W,DA,TP,2012	
...3	R803	2007-000328	R-CHIP;11KOHM,5%,1/10W,DA,TP,2012	
...3	R804	2007-000328	R-CHIP;11KOHM,5%,1/10W,DA,TP,2012	
...3	R805	2007-000001	R-CHIP;68KOHM,5%,1/10W,DA,TP,2012	
...3	R806	2007-000001	R-CHIP;68KOHM,5%,1/10W,DA,TP,2012	
...3	R807	2007-000001	R-CHIP;68KOHM,5%,1/10W,DA,TP,2012	

Level	Loc. No.	Code No.	Description ; Specification	Remark
...3	R808	2007-000001	R-CHIP;68KOHM,5%,1/10W,DA,TP,2012	
...3	R809	2007-000001	R-CHIP;68KOHM,5%,1/10W,DA,TP,2012	
...3	R810	2007-000001	R-CHIP;68KOHM,5%,1/10W,DA,TP,2012	
...3	R811	2007-000001	R-CHIP;68KOHM,5%,1/10W,DA,TP,2012	
...3	R812	2007-000001	R-CHIP;68KOHM,5%,1/10W,DA,TP,2012	
...3	R813	2007-000300	R-CHIP;10KOHM,5%,1/10W,DA,TP,2012	
...3	R814	2007-000300	R-CHIP;10KOHM,5%,1/10W,DA,TP,2012	
...3	R815	2007-000300	R-CHIP;10KOHM,5%,1/10W,DA,TP,2012	
...3	R816	2007-000774	R-CHIP;33KOHM,5%,1/10W,DA,TP,2012	
...3	R817	2007-000615	R-CHIP;24KOHM,5%,1/10W,DA,TP,2012	
...3	R818	2007-000774	R-CHIP;33KOHM,5%,1/10W,DA,TP,2012	
...3	R819	2007-000615	R-CHIP;24KOHM,5%,1/10W,DA,TP,2012	
..2		0202-000187	SOLDER-WIRE FLUX;-,RS60S,D1.2,63Sn/37Pb	S.N.A
..2		0202-001004	SOLDER-CREAM;SQ-2030M SZH-1,S63A,D0.04,6	S.N.A

ASSY CABINET

Level	Loc. No.	Code No.	Description ; Specification	Remark
1	*	AA90-00185U	ASSY CABINET;43J5,SP43J5HFX/RAD	S.N.A
..2	AC+BCM	AA60-10011A	SCREW-TAPTITE;HH,+,PC,M4,L12,ZPC(BLK),SW	S.N.A
..2	BCM+CM	6006-001090	SCREW-ASS'Y TAPP;WW,HEX,+,M6,L28.0,ZPC(Y	S.N.A
..2	BM+CBT	6003-001026	SCREW-TAPTITE;RH,+,B,M4,L15,ZPC(BLK),SWR	S.N.A
..2	CBT+CM	6005-001003	SCREW-WOOD;HH,+,M4,L20,ZPC(BLK),SWRCH18A	S.N.A
..2	CBW+CM	6005-001003	SCREW-WOOD;HH,+,M4,L20,ZPC(BLK),SWRCH18A	S.N.A
..2	CBW+HC	6005-001003	SCREW-WOOD;HH,+,M4,L20,ZPC(BLK),SWRCH18A	S.N.A
..2	CBW+TB	AA60-10011A	SCREW-TAPTITE;HH,+,PC,M4,L12,ZPC(BLK),SW	S.N.A
..2	CW+CM	6005-001003	SCREW-WOOD;HH,+,M4,L20,ZPC(BLK),SWRCH18A	S.N.A
..2	DB+CM	6005-001003	SCREW-WOOD;HH,+,M4,L20,ZPC(BLK),SWRCH18A	S.N.A
..2	FOC+CM	6003-001023	SCREW-TAPTITE;RWH,+,B,M3,L10,ZPC(YEL),SW	S.N.A
..2	HC+CM	6005-001003	SCREW-WOOD;HH,+,M4,L20,ZPC(BLK),SWRCH18A	S.N.A
..2	HS+CM	AA60-00021A	SCREW-WOOD;RH,+,M3.5,L22,ZPC(BLK),SWRCH1	S.N.A
..2	HV+BCM	AA60-10011A	SCREW-TAPTITE;HH,+,PC,M4,L12,ZPC(BLK),SW	S.N.A
..2		AA26-30006E	TRANS-FLYBACK;-,FWZ-50A001B(S),50KV,-	
..2		AA67-20025A	MIRROR-BACK SURFACE;43',GLASS,3.0,-,BSM,	
..2		AA67-00030A	SUN-SCREEN;-,43NEW,H/C,A/S,PMMA,T=93%,T2	
..2		AA67-00028A	SCREEN-TINT;-,43NEW,-,PMMA,TINT=10%,T3.0	
..2		AA65-30008A	CLAMP-CORD;PE,HB,BLK,-,-,-	S.N.A
..2		AA91-00241A	ASSY-BRACKET,MAIN;-,-,SECC T1.6 7,53J5	
...3	BMSBMM	AA60-10011A	SCREW-TAPTITE;HH,+,PC,M4,L12,ZPC(BLK),SW	S.N.A
...3		AA61-00152B	BRACKET-MAIN,M;-,7 PROJECTION,SECC,-,-,	
...3		AA61-00153B	BRACKET-MAIN,S;-,7 PROJECTION,SECC,-,-,	
..2		AA64-60449B	INLAY-COVER;SP-434JMF,PS,T0.5,149.3X69.5	
..2		AA61-20285A	HOLDER-BOX;-,3456,PP,VO,WHT,-	S.N.A
..2		AA61-11008A	BRACKET-MIRROR,S;-,SPT431J,SECC,T1.0,-,-	S.N.A
..2		AA61-11007B	BRACKET-MIRROR;-,SVP-434JA,SECC,T1.0,BLK	
..2		AA61-10361A	BRACKET-MIRROR;-,S5288,SECC-1,T1.0,-,-,-	S.N.A
..2		AA61-00185J	HOLDER-SCREEN,15T;-,43J5,ABS,HB,BLK,-	
..2		AA60-00036B	SPACER-COVER,DUST;SPONGE,T2,-,690X400,PJ	
..2		AA63-00021E	SPACER-MIRROR;PVC,-,BLK,L870,SP-434JMF,-	
..2		AA64-30433A	CABINET-BACK,T;-,S4388,-,HIPS,HB,BLK,-,-	
..2		AA64-00626C	CABINET-BACK,BOARD;-,53J5,-,HIPS,V0,BLK,	
..2		AA64-00579B	CABINET-FRONT,WOOD;-,43J5,-,MDF,-,-,T3,-	
..2		AA63-60002W	SPACER-FELT;FELT,T0.5,BLK,30X10,-,-	S.N.A
..2		AA63-10007C	BAND-PP;-,-,-,W18,-,CLEAR,1G,-	S.N.A
..2		AA63-00021G	SPACER-MIRROR;PVC,-,BLK,L420,524J,434J,-	
..2		AA63-00021F	SPACER-MIRROR;PVC,-,BLK,L612,SP-434JMF,-	

ASSY CHASSIS PART

Level	Loc. No.	Code No.	Description ; Specification	Remark
1	*	AA90-00103F	ASSY CHASSIS PART;J51A ,43J5	S.N.A
..2	CON+HC	6003-001023	SCREW-TAPTITE;RWH,+,B,M3,L10,ZPC(YEL),SW	S.N.A
..2	DF+FBT	6003-001023	SCREW-TAPTITE;RWH,+,B,M3,L10,ZPC(YEL),SW	S.N.A
..2	DF+HC	6003-001023	SCREW-TAPTITE;RWH,+,B,M3,L10,ZPC(YEL),SW	S.N.A
..2	PM+HC	6003-001023	SCREW-TAPTITE;RWH,+,B,M3,L10,ZPC(YEL),SW	S.N.A
..2	TBA+AV	6003-001026	SCREW-TAPTITE;RH,+,B,M4,L15,ZPC(BLK),SWR	S.N.A
..2	TBA+HC	6003-001023	SCREW-TAPTITE;RWH,+,B,M3,L10,ZPC(YEL),SW	S.N.A
..2	TBA+SC	6003-001026	SCREW-TAPTITE;RH,+,B,M4,L15,ZPC(BLK),SWR	S.N.A
..2		AA60-10011A	SCREW-TAPTITE;HH,+,PC,M4,L12,ZPC(BLK),SW	S.N.A
..2		AA61-00051B	HOLDER-CHASSIS;-,PCJ533R,ABS,VO,GRAY,E-2	S.N.A

ASSY-CRT-(B)

Level	Loc. No.	Code No.	Description ; Specification	Remark
1	*	AA94-00996A	ASSY-CRT-(B);P16LFM00BMB(U),+380MG,7,BA	
..2		AA61-00057C	HOLDER-CAP;-,7 PROJECTION,PC,-,CLEAR,-	S.N.A
..2		AA39-00018A	LEAD CONNECTOR-ASSY;-,YFH800-01,YRH187RH	S.N.A
..2		AA67-10037A	LENS;43INCH,SSM-75RS-43,-,SEKINOS,C	
..2		AA67-10036A	LENS-ASSY;43INCH,SSM-75RS-43,-,SEKINOS,C	
..2		AA64-00208B	CASE-COUPLER,B;-,PROJECTION,7,ALDC,-,BL	S.N.A
..2		AA91-00103C	ASSY-WIRE,CRT;-,-,7CRT,PROJECTION	S.N.A
...3		AA61-00053B	BRACKET-WIRE;-,PROJECTION,SECC-1,T1.6,-,	S.N.A
...3		AA61-00054B	BRACKET-EARTH;-,PROJECTION,PBS,-,-,-,-	S.N.A
...3		AA61-00055C	BRACKET-CRT,WIRE;-,PJT,SUS304 1/8H,-,-,-	S.N.A
⚠ ..2		AA26-30006F	TRANS-FLYBACK;-,FWZ-50A001C,55,30KV	
..2		AA63-00061B	SPACER-CAP;EPDM,-,BLK,-,PROJECTION,-	
..2		AA63-00091C	SPACER-CLENS;SILICON,-,GRAY,-,PROJECTION	S.N.A
..2		AA63-00060C	SPACER-CRT;SILICON,-,GRAY,7,PROJECTION,	S.N.A
..2		AA63-60025A	SPACER-DY;NEOPRENE,-,BLK,V0,S4388,-	S.N.A
..2		AA27-50005C	DEFLECTION-YOKE;-,DPD-4392AL,43'/PJTCRT,	
⚠ ..2		AA03-10021N	CRT-MONO;-,P16LFM00BMB(U),-,7,90deg,90	
⚠ ..2		AA27-60003C	MAGNET-CONVERGENCE;-,JH92LTU-SC-20,29.1m	
..2		AA63-10002A	BAND-TIE;-,NYLON66 V2,-,-,L100,NTR,-,-	S.N.A
..2		AA63-00099A	SPACER-FELT;PJT,-,BLK,-,30X30	S.N.A
..2		AA63-00076A	SPACER-LENS;FELT ,T1.0,BROWN,7CRT,PROJE	S.N.A
..2		AA61-00056B	BRACKET-LENS;-,PROJECTION,SECC,T1.6,-,-,	S.N.A
..2		AA60-10011A	SCREW-TAPTITE;HH,+,PC,M4,L12,ZPC(BLK),SW	S.N.A

ASSY-CRT-(G)

Level	Loc. No.	Code No.	Description ; Specification	Remark
1	*	AA94-00995A	ASSY-CRT-(G);P16LFM00HLA(AU),+380MG,7,B	
..2		AA61-00057C	HOLDER-CAP;-,7 PROJECTION,PC,-,CLEAR,-	S.N.A
..2		AA39-00018A	LEAD CONNECTOR-ASSY;-,YFH800-01,YRH187RH	S.N.A
..2		AA67-10039A	LENS;-,SSM-75RS-43,-,GRN C-ELEMENT	
..2		AA67-10036A	LENS-ASSY;43INCH,SSM-75RS-43,-,SEKINOS,C	
..2		AA64-00207B	CASE-COUPLER,G;-,PROJECTION,7,ALDC8,-,B	S.N.A
..2		AA91-00103C	ASSY-WIRE,CRT;-,-,7CRT,PROJECTION	S.N.A
...3		AA61-00053B	BRACKET-WIRE;-,PROJECTION,SECC-1,T1.6,-,	S.N.A
...3		AA61-00054B	BRACKET-EARTH;-,PROJECTION,PBS,-,-,-,-	S.N.A
...3		AA61-00055C	BRACKET-CRT,WIRE;-,PJT,SUS304 1/8H,-,-,-	S.N.A
⚠ ..2		AA26-30006F	TRANS-FLYBACK;-,FWZ-50A001C,55,30KV	
..2		AA63-00061B	SPACER-CAP;EPDM,-,BLK,-,PROJECTION,-	
..2		AA63-00060C	SPACER-CRT;SILICON,-,GRAY,7,PROJECTION,	S.N.A
..2		AA63-00091C	SPACER-CLENS;SILICON,-,GRAY,-,PROJECTION	S.N.A
..2		AA63-60025A	SPACER-DY;NEOPRENE,-,BLK,V0,S4388,-	S.N.A
..2		AA27-50005C	DEFLECTION-YOKE;-,DPD-4392AL,43'/PJTCRT,	
..2		AA03-10021L	CRT-MONO;P16LFM00HHA(MU),-,7 inch,-,-,-	
..2		AA27-00003B	MAGNET-CONVERGENCE;-,JH92LT-029,29.1MM	
..2		AA63-10002A	BAND-TIE;-,NYLON66 V2,-,-,L100,NTR,-,-	S.N.A
..2		AA63-00099A	SPACER-FELT;PJT,-,BLK,-,30X30	S.N.A
..2		AA63-00076A	SPACER-LENS;FELT ,T1.0,BROWN,7CRT,PROJE	S.N.A
..2		AA61-00056B	BRACKET-LENS;-,PROJECTION,SECC,T1.6,-,-,	S.N.A
..2		AA60-10011A	SCREW-TAPTITE;HH,+,PC,M4,L12,ZPC(BLK),SW	S.N.A

ASSY-CRT-(R)

Level	Loc. No.	Code No.	Description ; Specification	Remark
1	*	AA94-00994A	ASSY-CRT-(R);P16LFM00RFA(AU),+380MG,7,B	
..2		AA61-00057C	HOLDER-CAP;-,7 PROJECTION,PC,-,CLEAR,-	S.N.A
..2		AA39-00018A	LEAD CONNECTOR-ASSY;-,YFH800-01,YRH187RH	S.N.A
..2		AA67-10038A	LENS;43INCH,SSM-75RS-43,-,SEKINOS,R	
..2		AA67-10036A	LENS-ASSY;43INCH,SSM-75RS-43,-,SEKINOS,C	
..2		AA64-00206B	CASE-COUPLER,R;-,PROJECTION,-,ALDC8,-,BL	S.N.A
..2		AA91-00103C	ASSY-WIRE,CRT;-,-,7CRT,PROJECTION	S.N.A
...3		AA61-00053B	BRACKET-WIRE;-,PROJECTION,SECC-1,T1.6,-,	S.N.A
...3		AA61-00054B	BRACKET-EARTH;-,PROJECTION,PBS,-,-,-,-	S.N.A
...3		AA61-00055C	BRACKET-CRT,WIRE;-,PJT,SUS304 1/8H,-,-,-	S.N.A
⚠ ..2		AA26-30006F	TRANS-FLYBACK;-,FWZ-50A001C,55,30KV	
..2		AA63-00061B	SPACER-CAP;EPDM,-,BLK,-,PROJECTION,-	
..2		AA63-00091C	SPACER-CLENS;SILICON,-,GRAY,-,PROJECTION	S.N.A
..2		AA63-00060C	SPACER-CRT;SILICON,-,GRAY,7,PROJECTION,	S.N.A
..2		AA63-60025A	SPACER-DY;NEOPRENE,-,BLK,V0,S4388,-	S.N.A

Level	Loc. No.	Code No.	Description ; Specification	Remark
⚠ ..2		AA27-50005C	DEFLECTION-YOKE;-,DPD-4392AL,43'/PJTCRT,	
⚠ ..2		AA03-10021K	CRT-MONO;-,P16LFM00RFA(AU),-,7,90deg,9	
..2		AA27-00003B	MAGNET-CONVERGENCE;-,JH92LT-029,29.1MM	
..2		AA63-10002A	BAND-TIE;-,NYLON66 V2,-,-,L100,NTR,-,-	S.N.A
..2		AA63-00099A	SPACER-FELT;PJT,-,BLK,-,30X30	S.N.A
..2		AA63-00076A	SPACER-LENS;FELT ,T1.0,BROWN,7CRT,PROJE	S.N.A
..2		AA61-00056B	BRACKET-LENS;-,PROJECTION,SECC,T1.6,-,-	S.N.A
..2		AA60-10011A	SCREW-TAPTITE;HH,+,PC,M4,L12,ZPC(BLK),SW	S.N.A

ASSY-CABINET,MID

1	*	AA91-00442A	ASSY-CABINET,MID;-,WOOD,KBM21-58 ,43J5	
..2	BF+CM	AA60-10051B	SCREW-WOOD;RH,+,M3.5,L11,ZPC(YEL),SWRCH1	S.N.A
..2	CABMID	AA60-10050X	SCREW-WOOD;FH,+,M3.5,L32,ZPC(YEL),SWRCH1	S.N.A
..2	CABMID	AA63-00105D	SPACER-FELT;FELT,T2.0,-,-,-,-	S.N.A
..2	CABMID	AA61-00097A	HOLDER-WIRE;-,-,NYLON 6/6,-,NTR,-	S.N.A
..2	CABMID	AA63-00105C	SPACER-FELT;FELT,T2.0,-,-,-,-	S.N.A
..2	CABMID	AA66-40011A	ROLLER-PAPER;PAPER,OD36,L80,T3,-,SP4388P	S.N.A
..2	CABMID	AA65-30115A	CLAMP-WIRE;FE,-,BLK,2X150,PRJT,-	
..2	CAS+CM	6002-000214	SCREW-TAPPING;TH,+,1,M4.0,L16,ZPC(BLK),M	S.N.A
..2	SPK	AA60-00043A	SPACER-SPEAKER;FELT,T2,-,-,43J5,-	
..2	SPK+CM	AA60-10051A	SCREW-WOOD;PH,+,M4,L16,ZPC(BLK),SWRCH18A	S.N.A
..2		AA61-20136A	HOLDER-MASK,PIN;-,S4388,NYLON,-,BLK,#066	S.N.A
..2		AA63-00066C	SPACER-DUAL,LOCK;#250,-,-,11X20,-,-	S.N.A
..2		AA63-00193B	COVER-AIRVENT;-,533R,-,HIPS,VO,BLK,-,-	S.N.A
..2		AA64-00467C	CABINET-LEG,B;-,43J5,SV704P,ABS,HB,BLK,T	
..2		AA64-01279A	CABINET MIDDLE;43J5,KMB21-58 ,WOOD,-,-	
..2		AA61-10387A	BRACKET-GRILLE;-,SVP-462J,SECC-1,T0.5,-,	S.N.A
..2		3001-000279	SPEAKER;30W,8ohm,91dB,20Hz	
..2		3001-001107	SPEAKER;20W,8ohm,95dB,1300Hz	
..2		AA39-00042A	LEAD CONNECTOR-ASSY;-,-,-,-,-,-,-,-,-,RE	
..2		AA39-20505U	LEAD CONNECTOR-ASSY;,-,-,4P,-,-,-,YSH250	
..2		AA61-00094B	HOLDER-RAIL;-,PCJ533R,ABS,HB,BLK,240	S.N.A
..2		AA61-00185B	HOLDER-SCREEN,15T;-,43J2,43J5,ABS,HB,BLK	
..2		AA61-00185C	HOLDER-SCREEN,15T;-,43J2,43J5,ABS,HB,BLK	
..2		AA61-00458A	CASTER;-,-,TP4015-05 NYL,OH47,-,-,SR4	S.N.A

ASSY CABINET MASK

1	*	AA91-00395A	ASSY CABINET MASK;-,HB,BLK,S704+B702 TAN	
..2		AA64-01164B	CABINET-MASK,SIDE;43J5,S704+B702,ABS,HB,	
...3		AA64-01164A	CABINET-MASK,SIDE;43J5,L653 APCHUL,ABS,H	S.N.A
..2		AA64-01161E	CABINET-MASK,BOT;43J5HF,S704+B702 DOLBY,	
...3		AA64-01161A	CABINET-MASK;43J5,L872 APCHUL,ABS,HB,BLK	S.N.A
..2		AA64-01161D	CABINET-MASK,TOP;43J5HF,S704+B702 TANTUS	
...3		AA64-01161A	CABINET-MASK;43J5,L872 APCHUL,ABS,HB,BLK	S.N.A
..2		AA63-00063A	SPACER-DUAL,LOCK;#400,-,-,19X19,SVP-614J	S.N.A
..2		AA61-00441B	HOLDER-CORNER;E2 ALL,ABS,BLK,HB,-,S704+B	S.N.A

ASSY POWER CORD

1	*	AA96-20115F	ASSY POWER CORD;-,AP2/YES,H/C50mm,KJP170	
..2		3811-000401	WIRE-PVC CU;BCWA,300V,ROLL,17/0.16mm,#22	S.N.A
⚠ ..2		AA39-10005N	POWER-CORD;-,KKP-560A,KLCE-2F,2.59,3P,AU	S.N.A
..2		AA61-20284A	HOLDER;-,P-CORD,PP,VO,BLK,KE-002	S.N.A

ASSY CABINET BOT

1	*	AA91-00232C	ASSY CABINET BOT;-,VO,JERSEY SP200G SAMS	
..2		AA60-00064A	SPACER-JERSEY;43J5,JERSEY,-,-,-,GRAY,-,-	S.N.A
..2		AA64-00673A	BADGE-BRAND;AL,SAMSUNG,-,L72,-,PJT,-	
..2		AA64-00283B	CABINET-BOTTOM;-,43J5,JERSEY SP-200G D/G	S.N.A
..2		AA61-20295A	HOLDER-PIN;-,SPT555JHD,ABS,HB,BLK,-	S.N.A

ASSY TERMINAL BOARD

1	*	AA91-00158X	ASSY TERMINAL BOARD;-,HIPS,VO,BLK,J51A P	
..2		AA63-00045B	TERMINAL-BOARD,ANT;-,HIPS,-,PCJ533R,-	S.N.A
..2		AA64-00182X	INLAY BACK;SP53J5HF,J51A PAL,PS SHEET,T0	S.N.A

ASSY ACCESSORY

1	*	AA94-02563A	ASSY ACCESSORY;SP53J5HFX/RAD,J51A,NEWZEA	S.N.A
..2		AA69-30009C	BAG-SHEET;LDPE,T0.08,W150,L120,-,-,-	S.N.A
..2		AA68-00856A	MANUAL USERS;J51A,W/P100(G),44P,B5,1,ENG	S.N.A
..2		AA68-00711A	CARD WARRANTY;ALL,W/P100G,-,-,-,-,-	S.N.A
..2		AA61-20126A	HOLDER-LEG;-,-,ABS,HB,BLK,-	S.N.A
..2		AA39-40001B	CABLE-RCA;-,RCA,1500mm,0.12/10,RED/WHT/Y	

REMOCON

1	*	AA59-00100A	REMOCON;-,TM57,KS88P0416S,53,L/GRAY,S/	

7-3 SP53J5HFX/RAD

ASSY PCB MAIN(OPT)

Level	Loc. No.	Code No.	Description ; Specification	Remark
1	*	AA94-02683A	ASSY PCB MAIN(OPT);SP53J5HFX/RAD,J51A,NE	
..2	C664	2401-001068	C-AL;3300uF,20%,50V,GP,BK,22x40,10	
..2	C665	2401-000737	C-AL;2200uF,20%,50V,GP,TP,18x35.5,7	
..2	CN201	3711-003051	CONNECTOR-HEADER;BOX,8P,1R,2.5mm,STRAGHT	
..2	CN202	3711-003052	CONNECTOR-HEADER;BOX,10P,1R,2.5mm,STRAGH	
..2	CN501	3711-003051	CONNECTOR-HEADER;BOX,8P,1R,2.5mm,STRAGHT	
..2	CN801	3711-003974	CONNECTOR-HEADER;BOX,12P,1R,2.5mm,STRAIG	
..2	CNT01	3710-001208	CONNECTOR-SOCKET;32P,2R,2.54mm,STRAIGHT,	
..2	CNT02	3710-001208	CONNECTOR-SOCKET;32P,2R,2.54mm,STRAIGHT,	
..2	CNY01	3711-003973	CONNECTOR-HEADER;BOX,11P,1R,2.5mm,STRAIG	
..2	CS803	2401-003370	C-AL;47uF,20%,450V,GP,BK,16X35.5,7.	
..2	DS801	0402-000102	DIODE-BRIDGE;D2SB60,600V,1.5A,-	
..2	H001	AA40-10006S	TUNER-F/S;TECC2949PG30A(S),PAL-B/G,TR,18	
⚠ ..2	IC101	AA96-00110C	ASSY-H/S;-,-,AA62-30013K,SI-3090C,-	
...3		1203-000577	IC-VOLTAGE REGUATOR;3090,ZIP,5P,-,PLASTI	
...3		6003-000333	SCREW-TAPTITE;RH,+,2S,M3,L10,ZPC(YEL),SW	S.N.A
...3		AA62-30013K	HEATSINK-ES;-,-,-,-,44/18,-,WHT,A6063 EX	
⚠ ..2	IC102	AA96-00110A	ASSY-H/S;-,-,AA62-30013K,SI-3050C,-	
...3		1203-000203	IC-POSI.ADJUST REG.;3050,TO-220,5P,-,PLA	
...3		6003-000333	SCREW-TAPTITE;RH,+,2S,M3,L10,ZPC(YEL),SW	S.N.A
...3		AA62-30013K	HEATSINK-ES;-,-,-,-,44/18,-,WHT,A6063 EX	
⚠ ..2	IC103	1204-001276	IC-SOUND PROCESSOR;TDA9810,DIP,24P,400MI	
⚠ ..2	IC502	AA96-00110A	ASSY-H/S;-,-,AA62-30013K,SI-3050C,-	
⚠ ..2	IC503	AA96-00110A	ASSY-H/S;-,-,AA62-30013K,SI-3050C,-	
⚠ ..2	IC504	AA96-00110A	ASSY-H/S;-,-,AA62-30013K,SI-3050C,-	
⚠ ..2	IC665	AA96-00038A	ASSY-H/S;-,SOUND AMP,AA62-30173E,TDA726	
...3		0205-000129	GREASE-SILICON;SC102,JAPAN	S.N.A
...3		1201-001026	IC-POWER AMP;7265,ZIP,11P,19.6MIL,DUAL,1	
...3		6003-000333	SCREW-TAPTITE;RH,+,2S,M3,L10,ZPC(YEL),SW	S.N.A
...3		AA62-30173E	HEAT-SINK,ES;-,-,T1.0,WHITE,SCREW-HOLE(1	S.N.A
..2	IF/CAB	AA39-30007B	IF-CABLE;-,T,150mm,1365#26	
..2	L201	AA27-10001C	COIL-CHOKE;-,100uH,K,-,5.0A,ST,700UH-K(R	
..2	L603	AA29-00004A	FILTER-LINE NOISE;-,20UH,3A,AC80-260V,TQ	
..2	QZ107	AA96-50162F	ASSY-H/S;-,POWER,AA62-30013E,2SA1011,30	
...3		0502-000131	TR-POWER;2SA1011-D,PNP,1.2W,TO-220,-,60	
...3		6003-000333	SCREW-TAPTITE;RH,+,2S,M3,L10,ZPC(YEL),SW	S.N.A
...3		AA62-30013E	HEAT-SINK,ES;-,A6063 EXTR,-,-,30(21) T02	S.N.A
..2	QZ108	AA96-50162G	ASSY-H/S;-,AMP,AA62-30013E,2SC2344,30MM	
...3		0502-000153	TR-POWER;2SC2344-D,NPN,1.2W,TO-220,-,60	
...3		6003-000333	SCREW-TAPTITE;RH,+,2S,M3,L10,ZPC(YEL),SW	S.N.A
...3		AA62-30013E	HEAT-SINK,ES;-,A6063 EXTR,-,-,30(21) T02	S.N.A
..2	R913	2001-000786	R-CARBON;47KOHM,5%,1/8W,AA,TP,1.8X3.2MM	
..2	RL801	3501-001053	RELAY-POWER;5VDC,530MW,10A,1FORMA,15MS,5	
..2	TS801	AA26-00019A	TRANS-SWITCHING;-,AC80~260V,-,US,-,4MH,B	
..2	X901	2801-003224	CRYSTAL-UNIT;32.768KHZ,20PPM,28-AAY,12.5	
..2		AA95-00529A	ASSY-PCB,PIP;-,SP43J5HP,J51A,-,-,-	
...3	CNP01	3711-002709	CONNECTOR-HEADER;NOWALL,12P,1R,2.5MM,ANG	
...3	CNP03	3711-002709	CONNECTOR-HEADER;NOWALL,12P,1R,2.5MM,ANG	
⚠ ...3	ICP101	1204-000530	IC-PAL/NTSC DECODER;TDA9160A,DIP,32P,400	
⚠ ...3	ICP102	1204-000560	IC-DEMODULATOR;TDA9815,DIP,32P,400MIL,PL	
...3	RP126	2103-000665	VR-SEMI;20Kohm,25%,1/5W,SIDE	
⚠ ...3	TP101	AA26-10004E	TRANS-IF;-,7MG,VIF,-,7mm,8pF,116.7MHz,S	
...3	ZP102	2904-000253	FILTER-SAW AV;38.9MHz,DIP10K,ST,18dB,B/G	
...3		AA99-20066Z	ASSY-PCB SUB,AUTO; AA95-00529A ,V	S.N.A
....4	CP101	2203-000221	C-CERAMIC,CHIP;100nF,20%,50V,Y5V,TP,3216	
....4	CP102	2401-000922	C-AL;22uF,20%,16V,GP,TP,5x5,5	
....4	CP103	2203-000429	C-CERAMIC,CHIP;0.018nF,5%,50V,NP0,TP,201	
....4	CP104	2203-000218	C-CERAMIC,CHIP;100nF,20%,50V,Y5V,TP,2012	
....4	CP105	2203-000717	C-CERAMIC,CHIP;3.3nF,10%,50V,X7R,TP,3216	
....4	CP106	2203-000221	C-CERAMIC,CHIP;100nF,20%,50V,Y5V,TP,3216	
....4	CP107	2203-000221	C-CERAMIC,CHIP;100nF,20%,50V,Y5V,TP,3216	
....4	CP108	2203-000221	C-CERAMIC,CHIP;100nF,20%,50V,Y5V,TP,3216	
....4	CP109	2401-001840	C-AL;100uF,20%,16V,GP,TP,6.3x11,5	
....4	CP110	2203-000221	C-CERAMIC,CHIP;100nF,20%,50V,Y5V,TP,3216	
....4	CP111	2203-000716	C-CERAMIC,CHIP;3.3nF,10%,50V,X7R,TP,2012	
....4	CP112	2401-000660	C-AL;2.2uF,20%,50V,GP,TP,5x11,5	
....4	CP114	2203-000221	C-CERAMIC,CHIP;100nF,20%,50V,Y5V,TP,3216	
....4	CP115	2203-000221	C-CERAMIC,CHIP;100nF,20%,50V,Y5V,TP,3216	
....4	CP116	2203-000753	C-CERAMIC,CHIP;330nF,+80-20%,50V,Y5V,TP,	
....4	CP117	2401-002144	C-AL;47uF,20%,16V,GP,TP,5x11,5	
....4	CP118	2203-000221	C-CERAMIC,CHIP;100nF,20%,50V,Y5V,TP,3216	
....4	CP119	2201-000692	C-CERAMIC,DISC;0.008nF,0.5pF,50V,UJ,TP,4	
....4	CP120	2203-000578	C-CERAMIC,CHIP;220nF,20%,50V,Y5V,TP,3216	
....4	CP121	2401-000660	C-AL;2.2uF,20%,50V,GP,TP,5x11,5	
....4	CP123	2203-000260	C-CERAMIC,CHIP;10nF,10%,50V,X7R,TP,2012	
....4	CP124	2401-000660	C-AL;2.2uF,20%,50V,GP,TP,5x11,5	
....4	CP125	2203-000260	C-CERAMIC,CHIP;10nF,10%,50V,X7R,TP,2012	
....4	CP126	2401-001840	C-AL;100uF,20%,16V,GP,TP,6.3x11,5	
....4	CP127	2203-000221	C-CERAMIC,CHIP;100nF,20%,50V,Y5V,TP,3216	
....4	CP129	2203-000260	C-CERAMIC,CHIP;10nF,10%,50V,X7R,TP,2012	
....4	CP130	2203-000239	C-CERAMIC,CHIP;0.1nF,5%,50V,NP0,TP,2012	
....4	CP131	2201-000692	C-CERAMIC,DISC;0.008nF,0.5pF,50V,UJ,TP,4	
....4	CP132	2203-000239	C-CERAMIC,CHIP;0.1nF,5%,50V,NP0,TP,2012	
....4	CP133	2203-000221	C-CERAMIC,CHIP;100nF,20%,50V,Y5V,TP,3216	
....4	CP134	2401-001840	C-AL;100uF,20%,16V,GP,TP,6.3x11,5	
....4	CP135	2401-002144	C-AL;47uF,20%,16V,GP,TP,5x11,5	
....4	CP136	2203-000260	C-CERAMIC,CHIP;10nF,10%,50V,X7R,TP,2012	
....4	CP137	2203-000938	C-CERAMIC,CHIP;0.47nF,5%,50V,NP0,TP,2012	
....4	CP142	2401-000199	C-AL;1000uF,20%,6.3V,GP,TP,10x12.5,	
....4	CP143	2401-002144	C-AL;47uF,20%,16V,GP,TP,5x11,5	
....4	CP144	2203-000221	C-CERAMIC,CHIP;100nF,20%,50V,Y5V,TP,3216	
....4	CP145	2203-000221	C-CERAMIC,CHIP;100nF,20%,50V,Y5V,TP,3216	
....4	CP201	2203-000325	C-CERAMIC,CHIP;12nF,10%,50V,X7R,TP,3216,	
....4	CP203	2401-002144	C-AL;47uF,20%,16V,GP,TP,5x11,5	
....4	CP204	2203-000221	C-CERAMIC,CHIP;100nF,20%,50V,Y5V,TP,3216	
....4	CP205	2401-001840	C-AL;100uF,20%,16V,GP,TP,6.3x11,5	
....4	CP206	2203-000221	C-CERAMIC,CHIP;100nF,20%,50V,Y5V,TP,3216	
....4	CP207	2401-001840	C-AL;100uF,20%,16V,GP,TP,6.3x11,5	
....4	CP208	2203-000221	C-CERAMIC,CHIP;100nF,20%,50V,Y5V,TP,3216	
....4	CP209	2401-001914	C-AL;1uF,20%,50V,BP,TP,5x11,5	
....4	CP210	2401-001840	C-AL;100uF,20%,16V,GP,TP,6.3x11,5	
....4	CP211	2401-000603	C-AL;1uF,20%,50V,GP,TP,5x11,5	
....4	CP213	2401-000603	C-AL;1uF,20%,50V,GP,TP,5x11,5	
....4	CP214	2203-000578	C-CERAMIC,CHIP;220nF,20%,50V,Y5V,TP,3216	
....4	CP215	2401-000603	C-AL;1uF,20%,50V,GP,TP,5x11,5	
....4	CP216	2203-000221	C-CERAMIC,CHIP;100nF,20%,50V,Y5V,TP,3216	
....4	CP217	2203-000578	C-CERAMIC,CHIP;220nF,20%,50V,Y5V,TP,3216	
....4	CP218	2203-002085	C-CERAMIC,CHIP;56nF,10%,50V,X7R,TP,2012,	
....4	CP219	2203-000495	C-CERAMIC,CHIP;2.2nF,10%,50V,X7R,TP,2012	
....4	CP220	2203-000578	C-CERAMIC,CHIP;220nF,20%,50V,Y5V,TP,3216	
....4	CP221	2203-000221	C-CERAMIC,CHIP;100nF,20%,50V,Y5V,TP,3216	
....4	CP301	2401-001840	C-AL;100uF,20%,16V,GP,TP,6.3x11,5	
....4	CP302	2203-000221	C-CERAMIC,CHIP;100nF,20%,50V,Y5V,TP,3216	
....4	CP303	2401-001840	C-AL;100uF,20%,16V,GP,TP,6.3x11,5	
....4	CP304	2203-000221	C-CERAMIC,CHIP;100nF,20%,50V,Y5V,TP,3216	
....4	CP305	2203-000389	C-CERAMIC,CHIP;0.015nF,5%,50V,NP0,TP,201	
....4	CP306	2203-000389	C-CERAMIC,CHIP;0.015nF,5%,50V,NP0,TP,201	
....4	DP101	0401-000160	DIODE-SWITCHING;ISS314,30V,100mA,USC,TP	
....4	DP103	0403-000720	DIODE-ZENER;MTZJ9.1B,9.1V,8.57-9.01V,500	
....4	DP105	0401-000160	DIODE-SWITCHING;ISS314,30V,100mA,USC,TP	
....4	DP201	0403-000334	DIODE-ZENER;UZ2.7BSA,2.7V,2.54-2.75V,500	
⚠ ...4	ICP103	AA13-20004A	IC-HYBRID;-,PAP102T,SIP,6P,PRE-AMP,TP	
⚠ ...4	ICP105	1204-000635	IC-PICTURE PROCESS;SDA9189X,SOP,32P,350M	
⚠ ...4	ICP201	1002-000206	IC-A/D CONVERTER;SDA9187-2X,6BIT,SOP,28P	
....4	LP102	2701-000219	INDUCTOR-AXIAL;820nH,10%,2.5x3.4mm	
....4	LP103	2701-000114	INDUCTOR-AXIAL;10uH,10%,2.5x3.4mm	
....4	LP104	2701-000114	INDUCTOR-AXIAL;10uH,10%,2.5x3.4mm	
....4	LP105	2701-000114	INDUCTOR-AXIAL;10uH,10%,2.5x3.4mm	
....4	LP201	2701-000197	INDUCTOR-AXIAL;5.6uH,10%,2.5x3.4mm	
....4	LP301	2701-000114	INDUCTOR-AXIAL;10uH,10%,2.5x3.4mm	
....4	PCB	AA41-11003A	PCB-PIP;SCT53A,2L,FR-4,330x245x1.6T,A6	S.N.A
....4	QP104	0501-000342	TR-SMALL SIGNAL;KSC1623-Y,NPN,200mW,SOT-	
....4	QP105	0501-000342	TR-SMALL SIGNAL;KSC1623-Y,NPN,200mW,SOT-	
....4	QP106	0501-000342	TR-SMALL SIGNAL;KSC1623-Y,NPN,200mW,SOT-	
....4	QP201	0501-000342	TR-SMALL SIGNAL;KSC1623-Y,NPN,200mW,SOT-	
....4	QP202	0501-000342	TR-SMALL SIGNAL;KSC1623-Y,NPN,200mW,SOT-	
....4	QP203	0501-000280	TR-SMALL SIGNAL;KSA1182,PNP,150mW,SOT-23	
....4	QP204	0501-000342	TR-SMALL SIGNAL;KSC1623-Y,NPN,200mW,SOT-	
....4	QP205	0501-000342	TR-SMALL SIGNAL;KSC1623-Y,NPN,200mW,SOT-	
....4	QP206	0501-000342	TR-SMALL SIGNAL;KSC1623-Y,NPN,200mW,SOT-	

Level	Loc. No.	Code No.	Description ; Specification	Remark
....4	QP302	0501-000342	TR-SMALL SIGNAL;KSC1623-Y,NPN,200mW,SOT-	
....4	QP303	0501-000280	TR-SMALL SIGNAL;KSA1182,PNP,150mW,SOT-23	
....4	QP304	0501-000280	TR-SMALL SIGNAL;KSA1182,PNP,150mW,SOT-23	
....4	QP305	0501-000280	TR-SMALL SIGNAL;KSA1182,PNP,150mW,SOT-23	
....4	RC129	2007-000586	R-CHIP;22KOHM,5%,1/10W,DA,TP,2012	
....4	RP101	2007-001208	R-CHIP;82KOHM,5%,1/10W,DA,TP,2012	
....4	RP104	2007-000468	R-CHIP;1KOHM,5%,1/10W,DA,TP,2012	
....4	RP105	2007-000328	R-CHIP;11KOHM,5%,1/10W,DA,TP,2012	
....4	RP106	2007-000774	R-CHIP;33KOHM,5%,1/10W,DA,TP,2012	
....4	RP107	2007-000409	R-CHIP;15KOHM,5%,1/10W,DA,TP,2012	
....4	RP108	2007-000493	R-CHIP;2.2KOHM,5%,1/10W,DA,TP,2012	
....4	RP109	2007-000830	R-CHIP;39KOHM,5%,1/10W,DA,TP,2012	
....4	RP110	2007-000300	R-CHIP;10KOHM,5%,1/10W,DA,TP,2012	
....4	RP111	2007-000872	R-CHIP;4.7KOHM,5%,1/10W,DA,TP,2012	
....4	RP112	2007-000931	R-CHIP;470OHM,5%,1/10W,DA,TP,2012	
....4	RP113	2007-000774	R-CHIP;33KOHM,5%,1/10W,DA,TP,2012	
....4	RP114	2007-000290	R-CHIP;100OHM,5%,1/10W,DA,TP,2012	
....4	RP115	2007-000290	R-CHIP;100OHM,5%,1/10W,DA,TP,2012	
....4	RP116	2007-000493	R-CHIP;2.2KOHM,5%,1/10W,DA,TP,2012	
....4	RP118	2001-000117	R-CARBON(S);68OHM,5%,1/2W,AA,TP,2.4X6.4M	
....4	RP119	2007-000282	R-CHIP;100KOHM,5%,1/10W,DA,TP,2012	
....4	RP122	2007-000300	R-CHIP;10KOHM,5%,1/10W,DA,TP,2012	
....4	RP123	2007-000941	R-CHIP;47KOHM,5%,1/10W,DA,TP,2012	
....4	RP124	2007-000941	R-CHIP;47KOHM,5%,1/10W,DA,TP,2012	
....4	RP125	2007-000401	R-CHIP;150OHM,5%,1/10W,DA,TP,2012	
....4	RP127	2007-000030	R-CHIP;560OHM,5%,1/10W,DA,TP,2012	
....4	RP128	2007-000941	R-CHIP;47KOHM,5%,1/10W,DA,TP,2012	
....4	RP130	2007-000872	R-CHIP;4.7KOHM,5%,1/10W,DA,TP,2012	
....4	RP131	2007-000586	R-CHIP;22KOHM,5%,1/10W,DA,TP,2012	
....4	RP132	2007-000468	R-CHIP;1KOHM,5%,1/10W,DA,TP,2012	
....4	RP135	2007-000468	R-CHIP;1KOHM,5%,1/10W,DA,TP,2012	
....4	RP136	2007-000872	R-CHIP;4.7KOHM,5%,1/10W,DA,TP,2012	
....4	RP137	2007-001039	R-CHIP;56KOHM,5%,1/10W,DA,TP,2012	
....4	RP138	2007-000586	R-CHIP;22KOHM,5%,1/10W,DA,TP,2012	
....4	RP140	2007-000029	R-CHIP;0OHM,5%,1/10W,DA,TP,2012	
....4	RP201	2007-001039	R-CHIP;56KOHM,5%,1/10W,DA,TP,2012	
....4	RP202	2007-000401	R-CHIP;150OHM,5%,1/10W,DA,TP,2012	
....4	RP203	2007-000703	R-CHIP;3.6KOHM,5%,1/10W,DA,TP,2012	
....4	RP204	2007-000593	R-CHIP;22OHM,5%,1/10W,DA,TP,2012	
....4	RP205	2007-000477	R-CHIP;1MOHM,5%,1/10W,DA,TP,2012	
....4	RP206	2007-000931	R-CHIP;470OHM,5%,1/10W,DA,TP,2012	
....4	RP207	2007-001009	R-CHIP;51KOHM,5%,1/10W,DA,TP,2012	
....4	RP208	2007-000774	R-CHIP;33KOHM,5%,1/10W,DA,TP,2012	
....4	RP209	2007-000401	R-CHIP;150OHM,5%,1/10W,DA,TP,2012	
....4	RP210	2007-000221	R-CHIP;1.2KOHM,5%,1/10W,DA,TP,2012	
....4	RP211	2007-001001	R-CHIP;510OHM,5%,1/10W,DA,TP,2012	
....4	RP212	2007-000931	R-CHIP;470OHM,5%,1/10W,DA,TP,2012	
....4	RP213	2007-000872	R-CHIP;4.7KOHM,5%,1/10W,DA,TP,2012	
....4	RP215	2007-000872	R-CHIP;4.7KOHM,5%,1/10W,DA,TP,2012	
....4	RP216	2007-000872	R-CHIP;4.7KOHM,5%,1/10W,DA,TP,2012	
....4	RP217	2007-000409	R-CHIP;15KOHM,5%,1/10W,DA,TP,2012	
....4	RP301	2007-000290	R-CHIP;100OHM,5%,1/10W,DA,TP,2012	
....4	RP303	2007-000468	R-CHIP;1KOHM,5%,1/10W,DA,TP,2012	
....4	RP304	2007-000290	R-CHIP;100OHM,5%,1/10W,DA,TP,2012	
....4	RP307	2007-000518	R-CHIP;2.7KOHM,5%,1/10W,DA,TP,2012	
....4	RP308	2007-000401	R-CHIP;150OHM,5%,1/10W,DA,TP,2012	
....4	RP309	2007-000931	R-CHIP;470OHM,5%,1/10W,DA,TP,2012	
....4	RP310	2007-000931	R-CHIP;470OHM,5%,1/10W,DA,TP,2012	
....4	RP311	2007-000931	R-CHIP;470OHM,5%,1/10W,DA,TP,2012	
....4	RP312	2007-000300	R-CHIP;10KOHM,5%,1/10W,DA,TP,2012	
....4	RP313	2007-001155	R-CHIP;750OHM,5%,1/10W,DA,TP,2012	
....4	RP314	2007-001155	R-CHIP;750OHM,5%,1/10W,DA,TP,2012	
....4	RP315	2007-001155	R-CHIP;750OHM,5%,1/10W,DA,TP,2012	
....4	RP316	2001-001146	R-CARBON(S);4.7OHM,5%,1/2W,AA,TP,2.4X6.4	
....4	RP317	2001-001146	R-CARBON(S);4.7OHM,5%,1/2W,AA,TP,2.4X6.4	
....4	XP101	2801-000235	CRYSTAL-UNIT;3.579545MHz,40ppm,28-AAM,S,	
....4	XP102	2801-000274	CRYSTAL-UNIT;4.433619MHZ,30PPM,28-AAM,20	
....4	XP301	2802-000121	RESONATOR-CERAMIC;20.48MHz,0.5%,TP,10.0x	
...3		AA63-40013A	SHIELD-CASE;-,SPTE,T0.5,SCT51A,WZ74,-	S.N.A
...3		0202-000187	SOLDER-WIRE FLUX;-,RS60S,D1.2,63Sn/37Pb	S.N.A
..2		AA95-00519E	ASSY-PCB,PROSCAN;-,SP53J5HF,J51A,-,-,-	
...3	CNP901	3711-003543	CONNECTOR-HEADER;NOWALL,16P,1R,2.54MM,AN	
...3	CNP902	3711-001283	CONNECTOR-HEADER;NOWALL,14P,1R,2.5mm,ANG	
...3	CNP903	3711-001283	CONNECTOR-HEADER;NOWALL,14P,1R,2.5mm,ANG	
...3	CNP904	3711-001283	CONNECTOR-HEADER;NOWALL,14P,1R,2.5mm,ANG	
...3	XP601	2801-003811	CRYSTAL-UNIT;24.576MHZ,20PPM,28-AAM,30PF	

Level	Loc. No.	Code No.	Description ; Specification	Remark
...3		AA99-20079H	ASSY-PCB SUB,AUTO; AA95-00519E ,V	S.N.A
....4	CP101	2203-000938	C-CERAMIC,CHIP;0.47nF,5%,50V,NP0,TP,2012	
....4	CP102	2203-000938	C-CERAMIC,CHIP;0.47nF,5%,50V,NP0,TP,2012	
....4	CP103	2203-000761	C-CERAMIC,CHIP;330nF,10%,16V,X7R,TP,2012	
....4	CP104	2203-000761	C-CERAMIC,CHIP;330nF,10%,16V,X7R,TP,2012	
....4	CP106	2203-000444	C-CERAMIC,CHIP;1nF,10%,50V,X7R,TP,2012,-	
....4	CP109	2203-000218	C-CERAMIC,CHIP;100nF,20%,50V,Y5V,TP,2012	
....4	CP110	2401-001496	C-AL;47uF,20%,16V,GP,TP,5x7,5	
....4	CP111	2203-000979	C-CERAMIC,CHIP;47nF,10%,50V,X7R,TP,2012	
....4	CP112	2401-000486	C-AL;10uF,20%,50V,GP,TP,6.3x7mm,5	
....4	CP113	2203-001172	C-CERAMIC,CHIP;0.006nF,0.25pF,50V,NP0,TP	
....4	CP114	2203-001172	C-CERAMIC,CHIP;0.006nF,0.25pF,50V,NP0,TP	
....4	CP115	2203-000218	C-CERAMIC,CHIP;100nF,20%,50V,Y5V,TP,2012	
....4	CP116	2401-002009	C-AL;100uF,20%,16V,GP,TP,6.3x7,5	
....4	CP117	2203-000218	C-CERAMIC,CHIP;100nF,20%,50V,Y5V,TP,2012	
....4	CP118	2401-002009	C-AL;100uF,20%,16V,GP,TP,6.3x7,5	
....4	CP119	2203-000218	C-CERAMIC,CHIP;100nF,20%,50V,Y5V,TP,2012	
....4	CP120	2203-001002	C-CERAMIC,CHIP;0.047nF,5%,50V,NP0,TP,201	
....4	CP121	2203-001002	C-CERAMIC,CHIP;0.047nF,5%,50V,NP0,TP,201	
....4	CP122	2203-000761	C-CERAMIC,CHIP;330nF,10%,16V,X7R,TP,2012	
....4	CP126	2203-000218	C-CERAMIC,CHIP;100nF,20%,50V,Y5V,TP,2012	
....4	CP127	2401-002009	C-AL;100uF,20%,16V,GP,TP,6.3x7,5	
....4	CP128	2401-002009	C-AL;100uF,20%,16V,GP,TP,6.3x7,5	
....4	CP129	2203-000218	C-CERAMIC,CHIP;100nF,20%,50V,Y5V,TP,2012	
....4	CP130	2401-002009	C-AL;100uF,20%,16V,GP,TP,6.3x7,5	
....4	CP131	2203-000218	C-CERAMIC,CHIP;100nF,20%,50V,Y5V,TP,2012	
....4	CP132	2401-000486	C-AL;10uF,20%,50V,GP,TP,6.3x7mm,5	
....4	CP133	2203-000218	C-CERAMIC,CHIP;100nF,20%,50V,Y5V,TP,2012	
....4	CP135	2203-000575	C-CERAMIC,CHIP;220NF,10%,25V,X7R,TP,2012	
....4	CP137	2203-000218	C-CERAMIC,CHIP;100nF,20%,50V,Y5V,TP,2012	
....4	CP139	2203-000575	C-CERAMIC,CHIP;220NF,10%,25V,X7R,TP,2012	
....4	CP141	2203-000218	C-CERAMIC,CHIP;100nF,20%,50V,Y5V,TP,2012	
....4	CP142	2203-000938	C-CERAMIC,CHIP;0.47nF,5%,50V,NP0,TP,2012	
....4	CP143	2203-000938	C-CERAMIC,CHIP;0.47nF,5%,50V,NP0,TP,2012	
....4	CP144	2203-000938	C-CERAMIC,CHIP;0.47nF,5%,50V,NP0,TP,2012	
....4	CP145	2203-000761	C-CERAMIC,CHIP;330nF,10%,16V,X7R,TP,2012	
....4	CP301	2203-000218	C-CERAMIC,CHIP;100nF,20%,50V,Y5V,TP,2012	
....4	CP302	2203-000218	C-CERAMIC,CHIP;100nF,20%,50V,Y5V,TP,2012	
....4	CP303	2203-000218	C-CERAMIC,CHIP;100nF,20%,50V,Y5V,TP,2012	
....4	CP304	2203-000218	C-CERAMIC,CHIP;100nF,20%,50V,Y5V,TP,2012	
....4	CP305	2401-001496	C-AL;47uF,20%,16V,GP,TP,5x7,5	
....4	CP306	2203-000218	C-CERAMIC,CHIP;100nF,20%,50V,Y5V,TP,2012	
....4	CP307	2401-001496	C-AL;47uF,20%,16V,GP,TP,5x7,5	
....4	CP308	2203-000218	C-CERAMIC,CHIP;100nF,20%,50V,Y5V,TP,2012	
....4	CP309	2401-001496	C-AL;47uF,20%,16V,GP,TP,5x7,5	
....4	CP310	2203-000218	C-CERAMIC,CHIP;100nF,20%,50V,Y5V,TP,2012	
....4	CP311	2401-001496	C-AL;47uF,20%,16V,GP,TP,5x7,5	
....4	CP312	2203-000218	C-CERAMIC,CHIP;100nF,20%,50V,Y5V,TP,2012	
....4	CP313	2203-000218	C-CERAMIC,CHIP;100nF,20%,50V,Y5V,TP,2012	
....4	CP314	2203-000218	C-CERAMIC,CHIP;100nF,20%,50V,Y5V,TP,2012	
....4	CP315	2203-000218	C-CERAMIC,CHIP;100nF,20%,50V,Y5V,TP,2012	
....4	CP316	2203-000218	C-CERAMIC,CHIP;100nF,20%,50V,Y5V,TP,2012	
....4	CP317	2203-000218	C-CERAMIC,CHIP;100nF,20%,50V,Y5V,TP,2012	
....4	CP401	2203-000218	C-CERAMIC,CHIP;100nF,20%,50V,Y5V,TP,2012	
....4	CP402	2203-000218	C-CERAMIC,CHIP;100nF,20%,50V,Y5V,TP,2012	
....4	CP403	2401-002009	C-AL;100uF,20%,16V,GP,TP,6.3x7,5	
....4	CP404	2203-000218	C-CERAMIC,CHIP;100nF,20%,50V,Y5V,TP,2012	
....4	CP405	2203-000218	C-CERAMIC,CHIP;100nF,20%,50V,Y5V,TP,2012	
....4	CP406	2203-000142	C-CERAMIC,CHIP;1.5nF,10%,50V,X7R,TP,2012	
....4	CP407	2203-000239	C-CERAMIC,CHIP;0.1nF,5%,50V,NP0,TP,2012	
....4	CP408	2203-000218	C-CERAMIC,CHIP;100nF,20%,50V,Y5V,TP,2012	
....4	CP409	2203-000555	C-CERAMIC,CHIP;0.02nF,5%,50V,NP0,TP,2012	
....4	CP410	2203-000218	C-CERAMIC,CHIP;100nF,20%,50V,Y5V,TP,2012	
....4	CP411	2203-000218	C-CERAMIC,CHIP;100nF,20%,50V,Y5V,TP,2012	
....4	CP412	2203-000555	C-CERAMIC,CHIP;0.02nF,5%,50V,NP0,TP,2012	
....4	CP413	2203-000555	C-CERAMIC,CHIP;0.02nF,5%,50V,NP0,TP,2012	
....4	CP414	2203-000218	C-CERAMIC,CHIP;100nF,20%,50V,Y5V,TP,2012	
....4	CP415	2203-000218	C-CERAMIC,CHIP;100nF,20%,50V,Y5V,TP,2012	
....4	CP416	2203-000218	C-CERAMIC,CHIP;100nF,20%,50V,Y5V,TP,2012	
....4	CP417	2203-000218	C-CERAMIC,CHIP;100nF,20%,50V,Y5V,TP,2012	
....4	CP418	2404-001020	C-TA,CHIP;10uF,20%,10V,GP,TP,3216,3.2	
....4	CP419	2404-001020	C-TA,CHIP;10uF,20%,10V,GP,TP,3216,3.2	
....4	CP420	2404-001020	C-TA,CHIP;10uF,20%,10V,GP,TP,3216,3.2	
....4	CP501	2203-000925	C-CERAMIC,CHIP;470NF,+80-20%,50V,Y5V,TP,	
....4	CP502	2203-000925	C-CERAMIC,CHIP;470NF,+80-20%,50V,Y5V,TP,	
....4	CP503	2203-000925	C-CERAMIC,CHIP;470NF,+80-20%,50V,Y5V,TP,	

Level	Loc. No.	Code No.	Description ; Specification	Remark
....4	CP504	2203-000925	C-CERAMIC,CHIP;470NF,+80-20%,50V,Y5V,TP,	
....4	CP505	2203-000925	C-CERAMIC,CHIP;470NF,+80-20%,50V,Y5V,TP,	
....4	CP506	2401-001496	C-AL;47uF,20%,16V,GP,TP,5x7,5	
....4	CP507	2203-000218	C-CERAMIC,CHIP;100nF,20%,50V,Y5V,TP,2012	
....4	CP508	2203-000925	C-CERAMIC,CHIP;470NF,+80-20%,50V,Y5V,TP,	
....4	CP509	2203-000925	C-CERAMIC,CHIP;470NF,+80-20%,50V,Y5V,TP,	
....4	CP510	2203-000925	C-CERAMIC,CHIP;470NF,+80-20%,50V,Y5V,TP,	
....4	CP511	2203-000925	C-CERAMIC,CHIP;470NF,+80-20%,50V,Y5V,TP,	
....4	CP512	2203-000925	C-CERAMIC,CHIP;470NF,+80-20%,50V,Y5V,TP,	
....4	CP513	2203-000925	C-CERAMIC,CHIP;470NF,+80-20%,50V,Y5V,TP,	
....4	CP514	2203-000925	C-CERAMIC,CHIP;470NF,+80-20%,50V,Y5V,TP,	
....4	CP515	2203-000925	C-CERAMIC,CHIP;470NF,+80-20%,50V,Y5V,TP,	
....4	CP516	2203-000925	C-CERAMIC,CHIP;470NF,+80-20%,50V,Y5V,TP,	
....4	CP517	2203-000925	C-CERAMIC,CHIP;470NF,+80-20%,50V,Y5V,TP,	
....4	CP518	2401-000598	C-AL;1uF,20%,50V,GP,TP,4x7,5	
....4	CP519	2203-000925	C-CERAMIC,CHIP;470NF,+80-20%,50V,Y5V,TP,	
....4	CP520	2203-000925	C-CERAMIC,CHIP;470NF,+80-20%,50V,Y5V,TP,	
....4	CP521	2203-000925	C-CERAMIC,CHIP;470NF,+80-20%,50V,Y5V,TP,	
....4	CP522	2203-000925	C-CERAMIC,CHIP;470NF,+80-20%,50V,Y5V,TP,	
....4	CP523	2203-000925	C-CERAMIC,CHIP;470NF,+80-20%,50V,Y5V,TP,	
....4	CP524	2203-000260	C-CERAMIC,CHIP;10nF,10%,50V,X7R,TP,2012	
....4	CP525	2203-000218	C-CERAMIC,CHIP;100nF,20%,50V,Y5V,TP,2012	
....4	CP527	2203-000218	C-CERAMIC,CHIP;100nF,20%,50V,Y5V,TP,2012	
....4	CP528	2401-001496	C-AL;47uF,20%,16V,GP,TP,5x7,5	
....4	CP529	2203-000575	C-CERAMIC,CHIP;220NF,10%,25V,X7R,TP,2012	
....4	CP530	2203-000575	C-CERAMIC,CHIP;220NF,10%,25V,X7R,TP,2012	
....4	CP531	2203-000575	C-CERAMIC,CHIP;220NF,10%,25V,X7R,TP,2012	
....4	CP532	2203-000925	C-CERAMIC,CHIP;470NF,+80-20%,50V,Y5V,TP,	
....4	CP533	2401-000486	C-AL;10uF,20%,50V,GP,TP,6.3x7mm,5	
....4	CP534	2203-000260	C-CERAMIC,CHIP;10nF,10%,50V,X7R,TP,2012	
....4	CP535	2203-000260	C-CERAMIC,CHIP;10nF,10%,50V,X7R,TP,2012	
....4	CP536	2203-000260	C-CERAMIC,CHIP;10nF,10%,50V,X7R,TP,2012	
....4	CP537	2203-000260	C-CERAMIC,CHIP;10nF,10%,50V,X7R,TP,2012	
....4	CP538	2203-000260	C-CERAMIC,CHIP;10nF,10%,50V,X7R,TP,2012	
....4	CP539	2203-000260	C-CERAMIC,CHIP;10nF,10%,50V,X7R,TP,2012	
....4	CP540	2401-000486	C-AL;10uF,20%,50V,GP,TP,6.3x7mm,5	
....4	CP541	2203-001002	C-CERAMIC,CHIP;0.047nF,5%,50V,NP0,TP,201	
....4	CP542	2203-001002	C-CERAMIC,CHIP;0.047nF,5%,50V,NP0,TP,201	
....4	CP545	2203-000925	C-CERAMIC,CHIP;470NF,+80-20%,50V,Y5V,TP,	
....4	CP546	2203-000260	C-CERAMIC,CHIP;10nF,10%,50V,X7R,TP,2012	
....4	CP547	2203-000260	C-CERAMIC,CHIP;10nF,10%,50V,X7R,TP,2012	
....4	CP548	2203-000260	C-CERAMIC,CHIP;10nF,10%,50V,X7R,TP,2012	
....4	CP549	2203-000218	C-CERAMIC,CHIP;100nF,20%,50V,Y5V,TP,2012	
....4	CP550	2203-000218	C-CERAMIC,CHIP;100nF,20%,50V,Y5V,TP,2012	
....4	CP551	2203-000218	C-CERAMIC,CHIP;100nF,20%,50V,Y5V,TP,2012	
....4	CP552	2401-001496	C-AL;47uF,20%,16V,GP,TP,5x7,5	
....4	CP553	2203-000218	C-CERAMIC,CHIP;100nF,20%,50V,Y5V,TP,2012	
....4	CP554	2203-000218	C-CERAMIC,CHIP;100nF,20%,50V,Y5V,TP,2012	
....4	CP555	2203-000218	C-CERAMIC,CHIP;100nF,20%,50V,Y5V,TP,2012	
....4	CP556	2203-000218	C-CERAMIC,CHIP;100nF,20%,50V,Y5V,TP,2012	
....4	CP559	2203-000218	C-CERAMIC,CHIP;100nF,20%,50V,Y5V,TP,2012	
....4	CP601	2203-001088	C-CERAMIC,CHIP;0.005nF,0.25pF,50V,NP0,TP	
....4	CP602	2203-001088	C-CERAMIC,CHIP;0.005nF,0.25pF,50V,NP0,TP	
....4	CP603	2203-000925	C-CERAMIC,CHIP;470NF,+80-20%,50V,Y5V,TP,	
....4	CP604	2203-000938	C-CERAMIC,CHIP;0.47nF,5%,50V,NP0,TP,2012	
....4	CP605	2203-000444	C-CERAMIC,CHIP;1nF,10%,50V,X7R,TP,2012,-	
....4	CP607	2203-000218	C-CERAMIC,CHIP;100nF,20%,50V,Y5V,TP,2012	
....4	CP609	2203-000218	C-CERAMIC,CHIP;100nF,20%,50V,Y5V,TP,2012	
....4	CP610	2203-000218	C-CERAMIC,CHIP;100nF,20%,50V,Y5V,TP,2012	
....4	CP611	2203-000444	C-CERAMIC,CHIP;1nF,10%,50V,X7R,TP,2012,-	
....4	CP612	2203-000444	C-CERAMIC,CHIP;1nF,10%,50V,X7R,TP,2012,-	
....4	CP613	2203-000444	C-CERAMIC,CHIP;1nF,10%,50V,X7R,TP,2012,-	
....4	CP614	2203-000218	C-CERAMIC,CHIP;100nF,20%,50V,Y5V,TP,2012	
....4	CP615	2203-000218	C-CERAMIC,CHIP;100nF,20%,50V,Y5V,TP,2012	
....4	CP616	2203-001002	C-CERAMIC,CHIP;0.047nF,5%,50V,NP0,TP,201	
....4	CP617	2203-000218	C-CERAMIC,CHIP;100nF,20%,50V,Y5V,TP,2012	
....4	CP618	2203-000239	C-CERAMIC,CHIP;0.1nF,5%,50V,NP0,TP,2012	
....4	CP619	2203-000218	C-CERAMIC,CHIP;100nF,20%,50V,Y5V,TP,2012	
....4	CP620	2203-000218	C-CERAMIC,CHIP;100nF,20%,50V,Y5V,TP,2012	
....4	CP621	2203-000239	C-CERAMIC,CHIP;0.1nF,5%,50V,NP0,TP,2012	
....4	CP622	2203-000142	C-CERAMIC,CHIP;1.5nF,10%,50V,X7R,TP,2012	
....4	CP623	2203-000218	C-CERAMIC,CHIP;100nF,20%,50V,Y5V,TP,2012	
....4	CP624	2401-001496	C-AL;47uF,20%,16V,GP,TP,5x7,5	
....4	CP625	2203-000218	C-CERAMIC,CHIP;100nF,20%,50V,Y5V,TP,2012	
....4	CP626	2401-002009	C-AL;100uF,20%,16V,GP,TP,6.3x7,5	
....4	CP627	2203-000218	C-CERAMIC,CHIP;100nF,20%,50V,Y5V,TP,2012	
....4	CP628	2401-002009	C-AL;100uF,20%,16V,GP,TP,6.3x7,5	

Level	Loc. No.	Code No.	Description ; Specification	Remark
....4	CP629	2203-000218	C-CERAMIC,CHIP;100nF,20%,50V,Y5V,TP,2012	
....4	CP630	2203-000218	C-CERAMIC,CHIP;100nF,20%,50V,Y5V,TP,2012	
....4	CP631	2401-000598	C-AL;1uF,20%,50V,GP,TP,4x7,5	
....4	CP901	2404-001229	C-TA,CHIP;4.7uF,20%,25V,GP,TP,3528	
....4	CP902	2203-000218	C-CERAMIC,CHIP;100nF,20%,50V,Y5V,TP,2012	
....4	CP904	2203-001088	C-CERAMIC,CHIP;0.005nF,0.25pF,50V,NP0,TP	
....4	CP905	2203-000925	C-CERAMIC,CHIP;470NF,+80-20%,50V,Y5V,TP,	
....4	CP906	2203-000495	C-CERAMIC,CHIP;2.2nF,10%,50V,X7R,TP,2012	
....4	DP501	0403-001117	DIODE-ZENER;RLZ12B,5%,500mW,LL-34,TP	
....4	DP502	0403-001117	DIODE-ZENER;RLZ12B,5%,500mW,LL-34,TP	
....4	DP503	0403-001117	DIODE-ZENER;RLZ12B,5%,500mW,LL-34,TP	
....4	DP504	0403-000620	DIODE-ZENER;RLZ5.6B,5.6V,5.45-5.73V,400m	
....4	DP505	0403-000620	DIODE-ZENER;RLZ5.6B,5.6V,5.45-5.73V,400m	
....4	DP601	0401-000133	DIODE-SWITCHING;RLS4148,100V,200mA,SOD-8	
....4	DP602	0403-000620	DIODE-ZENER;RLZ5.6B,5.6V,5.45-5.73V,400m	
....4	DP603	0401-000133	DIODE-SWITCHING;RLS4148,100V,200mA,SOD-8	
....4	DP604	0401-000160	DIODE-SWITCHING;ISS314,30V,100mA,USC,TP	
....4	DP605	0401-000160	DIODE-SWITCHING;ISS314,30V,100mA,USC,TP	
....4	DP606	0401-000133	DIODE-SWITCHING;RLS4148,100V,200mA,SOD-8	
....4	DP607	0403-000620	DIODE-ZENER;RLZ5.6B,5.6V,5.45-5.73V,400m	
....4	DP901	0401-000133	DIODE-SWITCHING;RLS4148,100V,200mA,SOD-8	
....4	DP902	0401-000133	DIODE-SWITCHING;RLS4148,100V,200mA,SOD-8	
....4	DP903	0401-000133	DIODE-SWITCHING;RLS4148,100V,200mA,SOD-8	
....4	DP904	0401-000133	DIODE-SWITCHING;RLS4148,100V,200mA,SOD-8	
....4	FP101	2901-001120	FILTER-EMI SMD;25V,100mA,-,-,3.2x1.6x1,T	
....4	FP102	2901-001120	FILTER-EMI SMD;25V,100mA,-,-,3.2x1.6x1,T	
....4	FP301	2901-001120	FILTER-EMI SMD;25V,100mA,-,-,3.2x1.6x1,T	
....4	FP901	2901-000226	FILTER-EMI SMD;25V,0.3A,-,100pF,3.2x1.25	
....4	FP902	2901-000226	FILTER-EMI SMD;25V,0.3A,-,100pF,3.2x1.25	
....4	FP903	2901-000226	FILTER-EMI SMD;25V,0.3A,-,100pF,3.2x1.25	
....4	FP904	2901-000226	FILTER-EMI SMD;25V,0.3A,-,100pF,3.2x1.25	
....4	FP905	2901-000226	FILTER-EMI SMD;25V,0.3A,-,100pF,3.2x1.25	
....4	FP906	2901-000226	FILTER-EMI SMD;25V,0.3A,-,100pF,3.2x1.25	
....4	FP907	2901-000226	FILTER-EMI SMD;25V,0.3A,-,100pF,3.2x1.25	
....4	FP908	2901-000226	FILTER-EMI SMD;25V,0.3A,-,100pF,3.2x1.25	
⚠ 4	ICP101	1204-001362	IC-VIDEO PROCESS;VPC3215C-B8,PLCC,43P,-,	
⚠ 4	ICP103	1205-001172	IC-INTERFACE;CIP3250A-B1,PLCC,68P,-,PLAS	
⚠ 4	ICP301	1204-001623	IC-VERTICAL PROCESSO;SDA9400,QFP,64P,-,P	
⚠ 4	ICP302	1203-001419	IC-VOLTAGE REGULATOR;4931,TO-252,3P,6.6x	
⚠ 4	ICP401	1002-001045	IC-D/A CONVERTER;9280,8BIT,PLCC,68P,-,-,	
⚠ 4	ICP501	1204-001550	IC-VIDEO PROCESS;CXA2101AQ,QFP,80P,-,PLA	
⚠ 4	ICP601	1204-001372	IC-HOR./VER.PROCESSO;SDA9361,QFP,44P,-,P	
⚠ 4	ICP901	1202-000001	IC-VOLTAGE COMP.;7533,TO-92,3P,-,SINGLE,	
....4	LP101	3301-001324	CORE-FERRITE BEAD;AB,15OHM,2X1.25X0.9MM,	S.N.A
....4	LP102	3301-001324	CORE-FERRITE BEAD;AB,15OHM,2X1.25X0.9MM,	S.N.A
....4	LP103	3301-001324	CORE-FERRITE BEAD;AB,15OHM,2X1.25X0.9MM,	S.N.A
....4	LP105	3301-001324	CORE-FERRITE BEAD;AB,15OHM,2X1.25X0.9MM,	S.N.A
....4	LP106	3301-001324	CORE-FERRITE BEAD;AB,15OHM,2X1.25X0.9MM,	S.N.A
....4	LP107	3301-001324	CORE-FERRITE BEAD;AB,15OHM,2X1.25X0.9MM,	S.N.A
....4	LP301	3301-001324	CORE-FERRITE BEAD;AB,15OHM,2X1.25X0.9MM,	S.N.A
....4	LP302	3301-001324	CORE-FERRITE BEAD;AB,15OHM,2X1.25X0.9MM,	S.N.A
....4	LP303	3301-001324	CORE-FERRITE BEAD;AB,15OHM,2X1.25X0.9MM,	S.N.A
....4	LP401	3301-001324	CORE-FERRITE BEAD;AB,15OHM,2X1.25X0.9MM,	S.N.A
....4	LP402	3301-001324	CORE-FERRITE BEAD;AB,15OHM,2X1.25X0.9MM,	S.N.A
....4	LP403	3301-001324	CORE-FERRITE BEAD;AB,15OHM,2X1.25X0.9MM,	S.N.A
....4	LP404	3301-001324	CORE-FERRITE BEAD;AB,15OHM,2X1.25X0.9MM,	S.N.A
....4	LP601	3301-001324	CORE-FERRITE BEAD;AB,15OHM,2X1.25X0.9MM,	S.N.A
....4	LP602	3301-001324	CORE-FERRITE BEAD;AB,15OHM,2X1.25X0.9MM,	S.N.A
....4	LP603	2703-001717	INDUCTOR-SMD;1.2uH,5%,3.2x2.5x2.2mm	
....4	LP901	3301-001186	CORE-FERRITE BEAD;AB,600ohm,3.2x1.6x1.3m	S.N.A
....4	LP902	3301-001186	CORE-FERRITE BEAD;AB,600ohm,3.2x1.6x1.3m	S.N.A
....4	LP903	3301-001324	CORE-FERRITE BEAD;AB,15OHM,2X1.25X0.9MM,	S.N.A
....4	LP904	3301-001184	CORE-FERRITE BEAD;AB,1.3kohm,4.5x3.2x1.3	S.N.A
....4	LP905	3301-001184	CORE-FERRITE BEAD;AB,1.3kohm,4.5x3.2x1.3	S.N.A
....4	LP906	3301-001184	CORE-FERRITE BEAD;AB,1.3kohm,4.5x3.2x1.3	S.N.A
....4	QP501	0501-000280	TR-SMALL SIGNAL;KSA1182,PNP,150mW,SOT-23	
....4	QP502	0501-000344	TR-SMALL SIGNAL;KSC1623-G,NPN,200mW,SOT-	
....4	QP503	0501-000344	TR-SMALL SIGNAL;KSC1623-G,NPN,200mW,SOT-	
....4	QP504	0501-000280	TR-SMALL SIGNAL;KSA1182,PNP,150mW,SOT-23	
....4	QP505	0501-000280	TR-SMALL SIGNAL;KSA1182,PNP,150mW,SOT-23	
....4	QP506	0501-000280	TR-SMALL SIGNAL;KSA1182,PNP,150mW,SOT-23	
....4	QP508	0501-000344	TR-SMALL SIGNAL;KSC1623-G,NPN,200mW,SOT-	
....4	QP602	0501-000344	TR-SMALL SIGNAL;KSC1623-G,NPN,200mW,SOT-	
....4	QP902	0501-000280	TR-SMALL SIGNAL;KSA1182,PNP,150mW,SOT-23	
....4	RP101	2007-000029	R-CHIP;0OHM,5%,1/10W,DA,TP,2012	
....4	RP102	2007-000947	R-CHIP;47OHM,5%,1/10W,DA,TP,2012	
....4	RP106	2007-000290	R-CHIP;100OHM,5%,1/10W,DA,TP,2012	

Level	Loc. No.	Code No.	Description ; Specification	Remark
....4	RP112	2007-000290	R-CHIP;100OHM,5%,1/10W,DA,TP,2012	
....4	RP113	2007-000290	R-CHIP;100OHM,5%,1/10W,DA,TP,2012	
....4	RP114	2007-000290	R-CHIP;100OHM,5%,1/10W,DA,TP,2012	
....4	RP115	2007-000290	R-CHIP;100OHM,5%,1/10W,DA,TP,2012	
....4	RP117	2007-000029	R-CHIP;0OHM,5%,1/10W,DA,TP,2012	
....4	RP134	2007-000290	R-CHIP;100OHM,5%,1/10W,DA,TP,2012	
....4	RP135	2007-000290	R-CHIP;100OHM,5%,1/10W,DA,TP,2012	
....4	RP136	2011-000585	R-NETWORK;47ohm,5%,63mW,L,CHIP,8P,TP	
....4	RP137	2011-000585	R-NETWORK;47ohm,5%,63mW,L,CHIP,8P,TP	
....4	RP138	2011-000585	R-NETWORK;47ohm,5%,63mW,L,CHIP,8P,TP	
....4	RP139	2011-000585	R-NETWORK;47ohm,5%,63mW,L,CHIP,8P,TP	
....4	RP140	2011-000585	R-NETWORK;47ohm,5%,63mW,L,CHIP,8P,TP	
....4	RP141	2011-000585	R-NETWORK;47ohm,5%,63mW,L,CHIP,8P,TP	
....4	RP142	2011-000585	R-NETWORK;47ohm,5%,63mW,L,CHIP,8P,TP	
....4	RP143	2011-000585	R-NETWORK;47ohm,5%,63mW,L,CHIP,8P,TP	
....4	RP153	2007-000401	R-CHIP;150OHM,5%,1/10W,DA,TP,2012	
....4	RP154	2007-000308	R-CHIP;10OHM,5%,1/10W,DA,TP,2012	
....4	RP155	2007-000947	R-CHIP;47OHM,5%,1/10W,DA,TP,2012	
....4	RP156	2007-000947	R-CHIP;47OHM,5%,1/10W,DA,TP,2012	
....4	RP157	2007-000947	R-CHIP;47OHM,5%,1/10W,DA,TP,2012	
....4	RP159	2007-001166	R-CHIP;75OHM,5%,1/10W,DA,TP,2012	
....4	RP161	2007-000290	R-CHIP;100OHM,5%,1/10W,DA,TP,2012	
....4	RP301	2007-000290	R-CHIP;100OHM,5%,1/10W,DA,TP,2012	
....4	RP302	2007-000290	R-CHIP;100OHM,5%,1/10W,DA,TP,2012	
....4	RP303	2007-000290	R-CHIP;100OHM,5%,1/10W,DA,TP,2012	
....4	RP304	2007-000290	R-CHIP;100OHM,5%,1/10W,DA,TP,2012	
....4	RP305	2007-000290	R-CHIP;100OHM,5%,1/10W,DA,TP,2012	
....4	RP401	2011-000585	R-NETWORK;47ohm,5%,63mW,L,CHIP,8P,TP	
....4	RP402	2011-000585	R-NETWORK;47ohm,5%,63mW,L,CHIP,8P,TP	
....4	RP403	2011-000585	R-NETWORK;47ohm,5%,63mW,L,CHIP,8P,TP	
....4	RP404	2011-000585	R-NETWORK;47ohm,5%,63mW,L,CHIP,8P,TP	
....4	RP405	2007-000290	R-CHIP;100OHM,5%,1/10W,DA,TP,2012	
....4	RP406	2007-000290	R-CHIP;100OHM,5%,1/10W,DA,TP,2012	
....4	RP407	2007-000290	R-CHIP;100OHM,5%,1/10W,DA,TP,2012	
....4	RP408	2007-001055	R-CHIP;6.2KOHM,5%,1/10W,DA,TP,2012	
....4	RP409	2007-000401	R-CHIP;150OHM,5%,1/10W,DA,TP,2012	
....4	RP411	2007-001166	R-CHIP;75OHM,5%,1/10W,DA,TP,2012	
....4	RP412	2007-001166	R-CHIP;75OHM,5%,1/10W,DA,TP,2012	
....4	RP413	2007-000401	R-CHIP;150OHM,5%,1/10W,DA,TP,2012	
....4	RP415	2007-001166	R-CHIP;75OHM,5%,1/10W,DA,TP,2012	
....4	RP416	2007-001166	R-CHIP;75OHM,5%,1/10W,DA,TP,2012	
....4	RP417	2007-000380	R-CHIP;13KOHM,5%,1/10W,DA,TP,2012	
....4	RP418	2007-000401	R-CHIP;150OHM,5%,1/10W,DA,TP,2012	
....4	RP419	2007-001166	R-CHIP;75OHM,5%,1/10W,DA,TP,2012	
....4	RP421	2007-001166	R-CHIP;75OHM,5%,1/10W,DA,TP,2012	
....4	RP422	2007-000300	R-CHIP;10KOHM,5%,1/10W,DA,TP,2012	
....4	RP423	2007-000401	R-CHIP;150OHM,5%,1/10W,DA,TP,2012	
....4	RP501	2007-000029	R-CHIP;0OHM,5%,1/10W,DA,TP,2012	
....4	RP502	2007-000029	R-CHIP;0OHM,5%,1/10W,DA,TP,2012	
....4	RP503	2007-000029	R-CHIP;0OHM,5%,1/10W,DA,TP,2012	
....4	RP504	2007-000030	R-CHIP;560OHM,5%,1/10W,DA,TP,2012	
....4	RP505	2007-000572	R-CHIP;220OHM,5%,1/10W,DA,TP,2012	
....4	RP506	2007-000493	R-CHIP;2.2KOHM,5%,1/10W,DA,TP,2012	
....4	RP507	2007-001166	R-CHIP;75OHM,5%,1/10W,DA,TP,2012	
....4	RP509	2007-000931	R-CHIP;470OHM,5%,1/10W,DA,TP,2012	
....4	RP510	2007-000938	R-CHIP;47KOHM,1%,1/10W,DA,TP,2012	
....4	RP513	2007-000290	R-CHIP;100OHM,5%,1/10W,DA,TP,2012	
....4	RP514	2007-000210	R-CHIP;1.1KOHM,5%,1/10W,DA,TP,2012	
....4	RP515	2007-000468	R-CHIP;1KOHM,5%,1/10W,DA,TP,2012	
....4	RP516	2007-000468	R-CHIP;1KOHM,5%,1/10W,DA,TP,2012	
....4	RP517	2007-000290	R-CHIP;100OHM,5%,1/10W,DA,TP,2012	
....4	RP518	2007-000210	R-CHIP;1.1KOHM,5%,1/10W,DA,TP,2012	
....4	RP519	2007-000290	R-CHIP;100OHM,5%,1/10W,DA,TP,2012	
....4	RP521	2007-000210	R-CHIP;1.1KOHM,5%,1/10W,DA,TP,2012	
....4	RP522	2007-000290	R-CHIP;100OHM,5%,1/10W,DA,TP,2012	
....4	RP523	2007-000210	R-CHIP;1.1KOHM,5%,1/10W,DA,TP,2012	
....4	RP524	2007-000290	R-CHIP;100OHM,5%,1/10W,DA,TP,2012	
....4	RP525	2007-000290	R-CHIP;100OHM,5%,1/10W,DA,TP,2012	
....4	RP526	2007-000210	R-CHIP;1.1KOHM,5%,1/10W,DA,TP,2012	
....4	RP527	2007-000290	R-CHIP;100OHM,5%,1/10W,DA,TP,2012	
....4	RP528	2007-000290	R-CHIP;100OHM,5%,1/10W,DA,TP,2012	
....4	RP529	2007-000210	R-CHIP;1.1KOHM,5%,1/10W,DA,TP,2012	
....4	RP530	2007-000290	R-CHIP;100OHM,5%,1/10W,DA,TP,2012	
....4	RP537	2007-000689	R-CHIP;3.3MOHM,5%,1/10W,DA,TP,2012	
....4	RP542	2007-000290	R-CHIP;100OHM,5%,1/10W,DA,TP,2012	
....4	RP543	2007-000290	R-CHIP;100OHM,5%,1/10W,DA,TP,2012	

Level	Loc. No.	Code No.	Description ; Specification	Remark
....4	RP544	2007-000029	R-CHIP;0OHM,5%,1/10W,DA,TP,2012	
....4	RP546	2007-000290	R-CHIP;100OHM,5%,1/10W,DA,TP,2012	
....4	RP547	2007-000290	R-CHIP;100OHM,5%,1/10W,DA,TP,2012	
....4	RP549	2007-000671	R-CHIP;2KOHM,5%,1/10W,DA,TP,2012	
....4	RP550	2007-000290	R-CHIP;100OHM,5%,1/10W,DA,TP,2012	
....4	RP553	2007-000290	R-CHIP;100OHM,5%,1/10W,DA,TP,2012	
....4	RP554	2007-000290	R-CHIP;100OHM,5%,1/10W,DA,TP,2012	
....4	RP555	2007-000582	R-CHIP;22KOHM,1%,1/10W,DA,TP,2012	
....4	RP556	2007-000290	R-CHIP;100OHM,5%,1/10W,DA,TP,2012	
....4	RP560	2007-000468	R-CHIP;1KOHM,5%,1/10W,DA,TP,2012	
....4	RP562	2007-000468	R-CHIP;1KOHM,5%,1/10W,DA,TP,2012	
....4	RP565	2007-000029	R-CHIP;0OHM,5%,1/10W,DA,TP,2012	
....4	RP566	2007-000029	R-CHIP;0OHM,5%,1/10W,DA,TP,2012	
....4	RP567	2007-000029	R-CHIP;0OHM,5%,1/10W,DA,TP,2012	
....4	RP568	2007-000029	R-CHIP;0OHM,5%,1/10W,DA,TP,2012	
....4	RP569	2007-000029	R-CHIP;0OHM,5%,1/10W,DA,TP,2012	
....4	RP570	2007-000300	R-CHIP;10KOHM,5%,1/10W,DA,TP,2012	
....4	RP571	2007-000290	R-CHIP;100OHM,5%,1/10W,DA,TP,2012	
....4	RP601	2007-000290	R-CHIP;100OHM,5%,1/10W,DA,TP,2012	
....4	RP602	2007-000290	R-CHIP;100OHM,5%,1/10W,DA,TP,2012	
....4	RP603	2007-001208	R-CHIP;82KOHM,5%,1/10W,DA,TP,2012	
....4	RP604	2007-000947	R-CHIP;47OHM,5%,1/10W,DA,TP,2012	
....4	RP605	2007-000518	R-CHIP;2.7KOHM,5%,1/10W,DA,TP,2012	
....4	RP606	2007-000518	R-CHIP;2.7KOHM,5%,1/10W,DA,TP,2012	
....4	RP609	2007-000872	R-CHIP;4.7KOHM,5%,1/10W,DA,TP,2012	
....4	RP611	2007-000468	R-CHIP;1KOHM,5%,1/10W,DA,TP,2012	
....4	RP613	2007-000941	R-CHIP;47KOHM,5%,1/10W,DA,TP,2012	
....4	RP614	2007-000001	R-CHIP;68KOHM,5%,1/10W,DA,TP,2012	
....4	RP619	2007-000468	R-CHIP;1KOHM,5%,1/10W,DA,TP,2012	
....4	RP620	2007-000947	R-CHIP;47OHM,5%,1/10W,DA,TP,2012	
....4	RP621	2007-000947	R-CHIP;47OHM,5%,1/10W,DA,TP,2012	
....4	RP622	2007-000468	R-CHIP;1KOHM,5%,1/10W,DA,TP,2012	
....4	RP623	2007-000822	R-CHIP;390OHM,5%,1/10W,DA,TP,2012	
....4	RP624	2007-000290	R-CHIP;100OHM,5%,1/10W,DA,TP,2012	
....4	RP625	2007-000872	R-CHIP;4.7KOHM,5%,1/10W,DA,TP,2012	
....4	RP626	2007-000931	R-CHIP;470OHM,5%,1/10W,DA,TP,2012	
....4	RP627	2007-000872	R-CHIP;4.7KOHM,5%,1/10W,DA,TP,2012	
....4	RP628	2007-000267	R-CHIP;1.8KOHM,5%,1/10W,DA,TP,2012	
....4	RP629	2007-000872	R-CHIP;4.7KOHM,5%,1/10W,DA,TP,2012	
....4	RP630	2007-000468	R-CHIP;1KOHM,5%,1/10W,DA,TP,2012	
....4	RP631	2007-000872	R-CHIP;4.7KOHM,5%,1/10W,DA,TP,2012	
....4	RP709	2007-000029	R-CHIP;0OHM,5%,1/10W,DA,TP,2012	
....4	RP719	2007-000029	R-CHIP;0OHM,5%,1/10W,DA,TP,2012	
....4	RP727	2007-000029	R-CHIP;0OHM,5%,1/10W,DA,TP,2012	
....4	RP735	2007-000029	R-CHIP;0OHM,5%,1/10W,DA,TP,2012	
....4	RP736	2007-000029	R-CHIP;0OHM,5%,1/10W,DA,TP,2012	
....4	RP737	2007-000029	R-CHIP;0OHM,5%,1/10W,DA,TP,2012	
....4	RP738	2007-000029	R-CHIP;0OHM,5%,1/10W,DA,TP,2012	
....4	RP901	2007-000290	R-CHIP;100OHM,5%,1/10W,DA,TP,2012	
....4	RP904	2007-000029	R-CHIP;0OHM,5%,1/10W,DA,TP,2012	
....4	RP907	2007-000290	R-CHIP;100OHM,5%,1/10W,DA,TP,2012	
....4	RP908	2007-000290	R-CHIP;100OHM,5%,1/10W,DA,TP,2012	
....4	RP912	2007-000290	R-CHIP;100OHM,5%,1/10W,DA,TP,2012	
....4	RP913	2007-000290	R-CHIP;100OHM,5%,1/10W,DA,TP,2012	
....4	RP914	2007-000290	R-CHIP;100OHM,5%,1/10W,DA,TP,2012	
....4	RP915	2007-000290	R-CHIP;100OHM,5%,1/10W,DA,TP,2012	
....4	RP916	2007-000290	R-CHIP;100OHM,5%,1/10W,DA,TP,2012	
....4	RP917	2007-000290	R-CHIP;100OHM,5%,1/10W,DA,TP,2012	
....4	RP918	2007-000290	R-CHIP;100OHM,5%,1/10W,DA,TP,2012	
....4	RP920	2007-000290	R-CHIP;100OHM,5%,1/10W,DA,TP,2012	
....4	RP921	2007-000290	R-CHIP;100OHM,5%,1/10W,DA,TP,2012	
....4	RP924	2007-000029	R-CHIP;0OHM,5%,1/10W,DA,TP,2012	
....4	RP925	2007-000290	R-CHIP;100OHM,5%,1/10W,DA,TP,2012	
....4	RP926	2007-000290	R-CHIP;100OHM,5%,1/10W,DA,TP,2012	
....4	RP927	2007-000290	R-CHIP;100OHM,5%,1/10W,DA,TP,2012	
....4	RP929	2007-000029	R-CHIP;0OHM,5%,1/10W,DA,TP,2012	
....4	RP931	2007-000029	R-CHIP;0OHM,5%,1/10W,DA,TP,2012	
....4	RP933	2007-000029	R-CHIP;0OHM,5%,1/10W,DA,TP,2012	
....4	RP935	2007-000029	R-CHIP;0OHM,5%,1/10W,DA,TP,2012	
....4	RP936	2007-000468	R-CHIP;1KOHM,5%,1/10W,DA,TP,2012	
....4	RP943	2007-000468	R-CHIP;1KOHM,5%,1/10W,DA,TP,2012	
....4	RP944	2007-000941	R-CHIP;47KOHM,5%,1/10W,DA,TP,2012	
....4	RP945	2007-000290	R-CHIP;100OHM,5%,1/10W,DA,TP,2012	
....4	RP980	2007-000029	R-CHIP;0OHM,5%,1/10W,DA,TP,2012	
....4	XP101	2801-003432	CRYSTAL-UNIT;20.25MHZ,30PPM,28-AAM,13PF,	
....4		AA41-00233B	PCB-PROSCAN;SVP-53J5P,FR-4,4L,B,1.6T,245	S.N.A

Level	Loc. No.	Code No.	Description ; Specification	Remark
...3		AA63-40272A	SHIELD-CASE;-,SPTE,T0.5,-,CX724AHD	S.N.A
..2		AA99-30197W	ASSY-PCB ROBOT; AA94-02683A ,ER	S.N.A
...3	CS810	2201-000446	C-CERAMIC,DISC;3.3nF,20%,400V,Y5U,TP,15x	
...3	CS811	2201-000446	C-CERAMIC,DISC;3.3nF,20%,400V,Y5U,TP,15x	
...3	FI101	2904-000253	FILTER-SAW AV;38.9MHz,DIP10K,ST,18dB,B/G	
...3	FI102	2904-001010	FILTER-SAW AV;32.9~33.4MHz,SIP5P,ST,14.4	
...3	H002	AA40-10006T	TUNER-F/S;TECC2849PG29A(S),PAL-B/G,TR,18	
⚠ ...3	IC501	AA96-00111L	ASSY-H/S;-,-,AA62-30013L,KA78R12,-	
....4		1203-000165	IC-POSI.ADJUST REG.;78R12,TO-220,3P,-,-	
....4		6003-000333	SCREW-TAPTITE;RH,+,2S,M3,L10,ZPC(YEL),SW	S.N.A
....4		AA62-30013L	HEATSINK-ES;-,-,-,-,44/22,-,WHT,-,-,-,-	S.N.A
⚠ ...3	IC807	AA96-50147A	ASSY-H/S;-,TR,AA62-30012B,KA7805A,-	S.N.A
....4		1203-000274	IC-POSI.FIXED REG.;7805,TO-220,3P,-,PLAS	
....4		6003-000333	SCREW-TAPTITE;RH,+,2S,M3,L10,ZPC(YEL),SW	S.N.A
....4		AA62-30012B	HEAT SINK-ES;-,A6063 EXTR,-,-,45(16) T02	S.N.A
⚠ ...3	IC901	AA09-00093A	IC MICOM;Z9035612PSC-R50P3,SP43J5HF,52P	
⚠ ...3	IC902	1103-001106	IC-EEPROM;C81DC,1028x8Bit,DIP,8P,300MIL,	
⚠ ...3	ICS801	AA13-00024A	IC-HYBRID;-,TNY253P;-,8PIN,-,-	
⚠ ...3	ICS802	0604-001032	PHOTO-COUPLER;TR,170-260%,300mW,DIP-4,ST	
...3		AA99-10193B	ASSY-PCB MAIN,AUTO; AA99-30197W ,V	S.N.A
....4	C103	2201-000119	C-CERAMIC,DISC;100nF,+80-20%,50V,Y5V,TP,	
....4	C104	2401-001840	C-AL;100uF,20%,16V,GP,TP,6.3x11,5	
....4	C105	2401-000302	C-AL;100uF,20%,25V,GP,TP,6.3x11,5	
....4	C107	2305-000665	C-FILM,MPEF;100nF,5%,63V,TP,7.5x4.0x5.0m	
....4	C109	2201-000119	C-CERAMIC,DISC;100nF,+80-20%,50V,Y5V,TP,	
....4	C110	2401-001840	C-AL;100uF,20%,16V,GP,TP,6.3x11,5	
....4	C119	2201-000119	C-CERAMIC,DISC;100nF,+80-20%,50V,Y5V,TP,	
....4	C121	2305-000665	C-FILM,MPEF;100nF,5%,63V,TP,7.5x4.0x5.0m	
....4	C125	2401-000603	C-AL;1uF,20%,50V,GP,TP,5x11,5	
....4	C126	2201-000119	C-CERAMIC,DISC;100nF,+80-20%,50V,Y5V,TP,	
....4	C130	2201-000119	C-CERAMIC,DISC;100nF,+80-20%,50V,Y5V,TP,	
....4	C131	2305-000665	C-FILM,MPEF;100nF,5%,63V,TP,7.5x4.0x5.0m	
....4	C132	2305-000665	C-FILM,MPEF;100nF,5%,63V,TP,7.5x4.0x5.0m	
....4	C133	2401-001363	C-AL;470uF,20%,16V,GP,TP,10x12.5,5	
....4	C134	2401-002273	C-AL;220uF,20%,25V,HR,TP,10x20mm,5m	
....4	C135	2401-000287	C-AL;100uF,20%,16V,WT,TP,6.3x11,5	
....4	C136	2401-000027	C-AL;4.7uF,20%,50V,GP,TP,5x11,5	
....4	C137	2401-002212	C-AL;10uF,20%,25V,WT,TP,5x11,5	
....4	C138	2305-000665	C-FILM,MPEF;100nF,5%,63V,TP,7.5x4.0x5.0m	
....4	C139	2201-000180	C-CERAMIC,DISC;10nF,10%,50V,Y5V,TP,7x3,5	
....4	C140	2201-000292	C-CERAMIC,DISC;1nF,10%,50V,Y5P,TP,5x3.5,	
....4	C141	2201-000292	C-CERAMIC,DISC;1nF,10%,50V,Y5P,TP,5x3.5,	
....4	C142	2305-000289	C-FILM,MPEF;220nF,5%,63V,TP,-,5mm	
....4	C143	2401-000667	C-AL;2.2uF,20%,50V,WT,TP,5x11,5	
....4	C144	2201-000180	C-CERAMIC,DISC;10nF,10%,50V,Y5V,TP,7x3,5	
....4	C145	2305-000665	C-FILM,MPEF;100nF,5%,63V,TP,7.5x4.0x5.0m	
....4	C146	2305-000665	C-FILM,MPEF;100nF,5%,63V,TP,7.5x4.0x5.0m	
....4	C147	2401-000660	C-AL;2.2uF,20%,50V,GP,TP,5x11,5	
....4	C148	2305-000665	C-FILM,MPEF;100nF,5%,63V,TP,7.5x4.0x5.0m	
....4	C149	2401-000947	C-AL;22uF,20%,35V,GP,TP,5x11,5	
....4	C180	2401-002300	C-AL;47uF,20%,50V,GP,TP,6.3x11,5	
....4	C185	2401-001363	C-AL;470uF,20%,16V,GP,TP,10x12.5,5	
....4	C191	2401-002619	C-AL;47uF,20%,25V,GP,TP,5x11,5	
....4	C501	2305-000665	C-FILM,MPEF;100nF,5%,63V,TP,7.5x4.0x5.0m	
....4	C502	2401-001397	C-AL;470uF,20%,25V,GP,TP,10x16,5	
....4	C503	2305-000665	C-FILM,MPEF;100nF,5%,63V,TP,7.5x4.0x5.0m	
....4	C504	2401-000832	C-AL;220uF,20%,25V,GP,TP,8x11.5,5	
....4	C505	2305-000665	C-FILM,MPEF;100nF,5%,63V,TP,7.5x4.0x5.0m	
....4	C506	2401-002594	C-AL;220uF,20%,16V,GP,TP,8x11.5,5	
....4	C507	2305-000665	C-FILM,MPEF;100nF,5%,63V,TP,7.5x4.0x5.0m	
....4	C508	2401-002286	C-AL;470uF,20%,16V,WT,TP,10x12.5,5	
....4	C509	2305-000665	C-FILM,MPEF;100nF,5%,63V,TP,7.5x4.0x5.0m	
....4	C510	2401-000133	C-AL;1000uF,20%,16V,GP,TP,10x20,5	
....4	C511	2305-000665	C-FILM,MPEF;100nF,5%,63V,TP,7.5x4.0x5.0m	
....4	C512	2401-000689	C-AL;2200uF,20%,16V,GP,TP,13x25,5	
....4	C519	2305-000665	C-FILM,MPEF;100nF,5%,63V,TP,7.5x4.0x5.0m	
....4	C520	2401-001397	C-AL;470uF,20%,25V,GP,TP,10x16,5	
....4	C521	2305-000665	C-FILM,MPEF;100nF,5%,63V,TP,7.5x4.0x5.0m	
....4	C522	2401-002286	C-AL;470uF,20%,16V,WT,TP,10x12.5,5	
....4	C523	2201-000292	C-CERAMIC,DISC;1nF,10%,50V,Y5P,TP,5x3.5,	
....4	C537	2305-000665	C-FILM,MPEF;100nF,5%,63V,TP,7.5x4.0x5.0m	
....4	C538	2401-001840	C-AL;100uF,20%,16V,GP,TP,6.3x11,5	
....4	C539	2401-001840	C-AL;100uF,20%,16V,GP,TP,6.3x11,5	
....4	C540	2305-000665	C-FILM,MPEF;100nF,5%,63V,TP,7.5x4.0x5.0m	
....4	C543	2201-000144	C-CERAMIC,DISC;0.1nF,5%,50V,NP0,TP,8.5x3	
....4	C544	2401-002144	C-AL;47uF,20%,16V,GP,TP,5x11,5	
....4	C601	2401-002299	C-AL;4.7uF,20%,50V,GP,TP,5x7,5	

Level	Loc. No.	Code No.	Description ; Specification	Remark
....4	C602	2401-002299	C-AL;4.7uF,20%,50V,GP,TP,5x7,5	
....4	C666	2305-000665	C-FILM,MPEF;100nF,5%,63V,TP,7.5x4.0x5.0m	
....4	C667	2401-000603	C-AL;1uF,20%,50V,GP,TP,5x11,5	
....4	C668	2401-000603	C-AL;1uF,20%,50V,GP,TP,5x11,5	
....4	C669	2401-000962	C-AL;22uF,20%,50V,GP,TP,5x11,5	
....4	C670	2401-000603	C-AL;1uF,20%,50V,GP,TP,5x11,5	
....4	C671	2401-001537	C-AL;47uF,20%,25V,GP,TP,6.3x7mm,5mm	
....4	C676	2401-001192	C-AL;33uF,20%,50V,GP,TP,6.3x11,5	
....4	C686	2201-000411	C-CERAMIC,DISC;0.27nF,10%,50V,Y5P,TP,4x3	
....4	C687	2201-000411	C-CERAMIC,DISC;0.27nF,10%,50V,Y5P,TP,4x3	
....4	C688	2401-000192	C-AL;1000uF,20%,50V,GP,TP,16x25,7.5	
....4	C689	2305-000665	C-FILM,MPEF;100nF,5%,63V,TP,7.5x4.0x5.0m	
....4	C690	2305-000665	C-FILM,MPEF;100nF,5%,63V,TP,7.5x4.0x5.0m	
....4	C691	2401-000192	C-AL;1000uF,20%,50V,GP,TP,16x25,7.5	
....4	C701	2401-000027	C-AL;4.7uF,20%,50V,GP,TP,5x11,5	
....4	C801	2401-002300	C-AL;47uF,20%,50V,GP,TP,6.3x11,5	
....4	C901	2202-000796	C-CERAMIC,MLC-AXIAL;1NF,10%,50V,Y5P,TP,3	
....4	C905	2401-001496	C-AL;47uF,20%,16V,GP,TP,5x7,5	
....4	C906	2305-000149	C-FILM,MPEF;100nF,5%,100V,TP,12x12.5x6.5	
....4	C908	2201-000292	C-CERAMIC,DISC;1nF,10%,50V,Y5P,TP,5x3.5,	
....4	C909	2201-000292	C-CERAMIC,DISC;1nF,10%,50V,Y5P,TP,5x3.5,	
....4	C912	2201-000119	C-CERAMIC,DISC;100nF,+80-20%,50V,Y5V,TP,	
....4	C913	2201-000193	C-CERAMIC,DISC;0.01nF,0.25pF,50V,NP0,TP,	
....4	C914	2201-000573	C-CERAMIC,DISC;0.047nF,5%,50V,NP0,TP,5x3	
....4	C915	2201-000119	C-CERAMIC,DISC;100nF,+80-20%,50V,Y5V,TP,	
....4	C916	2401-002042	C-AL;220uF,20%,10V,GP,TP,6.3x11,5	
....4	C917	2401-002144	C-AL;47uF,20%,16V,GP,TP,5x11,5	
....4	C918	2201-000119	C-CERAMIC,DISC;100nF,+80-20%,50V,Y5V,TP,	
....4	C919	2401-000480	C-AL;10uF,20%,50V,GP,TP,5x11,5	
....4	C920	2201-000119	C-CERAMIC,DISC;100nF,+80-20%,50V,Y5V,TP,	
....4	C925	2201-000119	C-CERAMIC,DISC;100nF,+80-20%,50V,Y5V,TP,	
....4	C926	2401-000480	C-AL;10uF,20%,50V,GP,TP,5x11,5	
....4	C927	2202-000231	C-CERAMIC,MLC-AXIAL;330pF,10%,50V,Y5P,TP	
....4	C928	2202-000796	C-CERAMIC,MLC-AXIAL;1NF,10%,50V,Y5P,TP,3	
....4	CN003	3711-002642	CONNECTOR-HEADER;BOX,3P,1R,2.5MM,STRAIGH	
....4	CN402	3711-002642	CONNECTOR-HEADER;BOX,3P,1R,2.5MM,STRAIGH	
....4	CN403	3711-002642	CONNECTOR-HEADER;BOX,3P,1R,2.5MM,STRAIGH	
....4	CN404	3711-002642	CONNECTOR-HEADER;BOX,3P,1R,2.5MM,STRAIGH	
....4	CN601	3711-002643	CONNECTOR-HEADER;BOX,4P,1R,2.5MM,STRAIGH	
....4	CS801	2201-000332	C-CERAMIC,DISC;2.2nF,20%,250V,Y5U,TP,9x4	
....4	CS802	2201-000332	C-CERAMIC,DISC;2.2nF,20%,250V,Y5U,TP,9x4	
....4	CS804	2201-000119	C-CERAMIC,DISC;100nF,+80-20%,50V,Y5V,TP,	
....4	CS805	2401-002286	C-AL;470uF,20%,16V,WT,TP,10x12.5,5	
....4	CS807	2201-000119	C-CERAMIC,DISC;100nF,+80-20%,50V,Y5V,TP,	
....4	CS808	2401-002286	C-AL;470uF,20%,16V,WT,TP,10x12.5,5	
....4	CS809	2201-000556	C-CERAMIC,DISC;0.47nF,10%,500V,Y5P,TP,5.	
....4	CS812	2201-002076	C-CERAMIC,DISC;0.068nF,5%,1kV,SL,TP,8x4m	
....4	CZ144	2401-000480	C-AL;10uF,20%,50V,GP,TP,5x11,5	
....4	CZ146	2401-000832	C-AL;220uF,20%,25V,GP,TP,8x11.5,5	
....4	CZ147	2201-000193	C-CERAMIC,DISC;0.01nF,0.25pF,50V,NP0,TP,	
....4	CZ148	2201-000193	C-CERAMIC,DISC;0.01nF,0.25pF,50V,NP0,TP,	
....4	CZ149	2201-000516	C-CERAMIC,DISC;4.7nF,+100-0%,500V,Y5U,TP	
....4	CZ150	2201-000516	C-CERAMIC,DISC;4.7nF,+100-0%,500V,Y5U,TP	
....4	CZ151	2401-001513	C-AL;47uF,20%,16V,WT,TP,5x11,5	
....4	CZ152	2401-001157	C-AL;33uF,20%,160V,GP,TP,12.5x20,5	
....4	CZ153	2401-001513	C-AL;47uF,20%,16V,WT,TP,5x11,5	
....4	CZ155	2201-000604	C-CERAMIC,DISC;0.056nF,+100-0%,500V,SL,T	
....4	CZ167	2401-001220	C-AL;4.7uF,20%,160V,GP,TP,8x11.5,5	
....4	CZ167A	2401-001220	C-AL;4.7uF,20%,160V,GP,TP,8x11.5,5	
....4	D101	0401-001088	DIODE-SWITCHING;BAW76,50V,300mA,DO-35,TP	
....4	D102	0401-001088	DIODE-SWITCHING;BAW76,50V,300mA,DO-35,TP	
....4	D103	0401-001088	DIODE-SWITCHING;BAW76,50V,300mA,DO-35,TP	
....4	D501	0401-000005	DIODE-SWITCHING;1N4148,100V,200MA,DO-35,	
....4	D664	0402-000546	DIODE-RECTIFIER;TVR10G,400V,1.0A,DO-41,T	
....4	D665	0401-000005	DIODE-SWITCHING;1N4148,100V,200MA,DO-35,	
....4	D666	0401-000005	DIODE-SWITCHING;1N4148,100V,200MA,DO-35,	
....4	D667	0401-000005	DIODE-SWITCHING;1N4148,100V,200MA,DO-35,	
....4	D668	0401-000005	DIODE-SWITCHING;1N4148,100V,200MA,DO-35,	
....4	D669	0401-000005	DIODE-SWITCHING;1N4148,100V,200MA,DO-35,	
....4	D701	0401-000005	DIODE-SWITCHING;1N4148,100V,200MA,DO-35,	
....4	D702	0401-000005	DIODE-SWITCHING;1N4148,100V,200MA,DO-35,	
....4	D703	0401-000005	DIODE-SWITCHING;1N4148,100V,200MA,DO-35,	
....4	D901	0401-000005	DIODE-SWITCHING;1N4148,100V,200MA,DO-35,	
....4	D902	0401-000005	DIODE-SWITCHING;1N4148,100V,200MA,DO-35,	
....4	D903	0401-000005	DIODE-SWITCHING;1N4148,100V,200MA,DO-35,	
....4	D904	0401-000005	DIODE-SWITCHING;1N4148,100V,200MA,DO-35,	
....4	D905	0401-000005	DIODE-SWITCHING;1N4148,100V,200MA,DO-35,	

Level	Loc. No.	Code No.	Description ; Specification	Remark
....4	D906	0401-000005	DIODE-SWITCHING;1N4148,100V,200MA,DO-35,	
....4	D907	0401-000005	DIODE-SWITCHING;1N4148,100V,200MA,DO-35,	
⚠ 4	DS802	1405-000152	VARISTOR;560V,2500A,14x8.5mm,TP	
⚠ 4	DS803	0403-001322	DIODE-ZENER;MTZJ8.2B,7.78-8.19V,500mW,DO	
⚠ 4	DS804	0403-001318	DIODE-ZENER;MTZJ4.3B,4.17-4.43V,500mW,DO	
⚠ 4	DS805	0402-000534	DIODE-RECTIFIER;RG10V,400V,1.2A,DO-201,T	
⚠ 4	DS806	1405-001030	VARISTOR;120V,2500A,14x8.5mm,TP	
⚠ 4	DS807	0402-000546	DIODE-RECTIFIER;TVR10G,400V,1.0A,DO-41,T	
⚠ 4	DS808	1405-000152	VARISTOR;560V,2500A,14x8.5mm,TP	
⚠ 4	DS809	0404-001056	DIODE-SCHOTTKY;RK16,60V,1.5A,DO-204AC,TP	
⚠ 4	DS810	1405-000152	VARISTOR;560V,2500A,14x8.5mm,TP	
....4	DZ116	0401-000005	DIODE-SWITCHING;1N4148,100V,200MA,DO-35,	
....4	DZ117	0401-000005	DIODE-SWITCHING;1N4148,100V,200MA,DO-35,	
....4	DZ118	0402-000546	DIODE-RECTIFIER;TVR10G,400V,1.0A,DO-41,T	
....4	DZ119	0401-000005	DIODE-SWITCHING;1N4148,100V,200MA,DO-35,	
....4	DZ120	0402-000546	DIODE-RECTIFIER;TVR10G,400V,1.0A,DO-41,T	
....4	DZ121	0402-000546	DIODE-RECTIFIER;TVR10G,400V,1.0A,DO-41,T	
....4	DZ501	0403-000508	DIODE-ZENER;MTZJ5.6B,5.6V,5.45-5.73V,500	
....4	DZ502	0403-000508	DIODE-ZENER;MTZJ5.6B,5.6V,5.45-5.73V,500	
....4	DZ503	0403-000720	DIODE-ZENER;MTZJ9.1B,9.1V,8.57-9.01V,500	
....4	DZ504	0403-000720	DIODE-ZENER;MTZJ9.1B,9.1V,8.57-9.01V,500	
....4	DZ505	0403-000720	DIODE-ZENER;MTZJ9.1B,9.1V,8.57-9.01V,500	
....4	DZ506	0403-000508	DIODE-ZENER;MTZJ5.6B,5.6V,5.45-5.73V,500	
....4	DZ507	0403-000510	DIODE-ZENER;MTZJ6.2B,6.2V,5.96-6.27V,500	
....4	DZ508	0403-000510	DIODE-ZENER;MTZJ6.2B,6.2V,5.96-6.27V,500	
....4	DZ665	0403-001039	DIODE-ZENER;MA2560,56V,52-60V,1W,DO-41,T	
....4	DZ666	0403-001325	DIODE-ZENER;MTZJ15C,14.35-15.09V,500mW,D	
....4	DZ667	0403-001319	DIODE-ZENER;MTZJ4.7C,4.68-4.93V,500mW,DO	
....4	DZ701	0403-001140	DIODE-ZENER;RD10ESAB-T4,10V,9.19-10.30V,	
....4	DZ801	0403-000700	DIODE-ZENER;TZP33A,33V,31-35V,1W,DO-41,T	
....4	DZ901	0403-000508	DIODE-ZENER;MTZJ5.6B,5.6V,5.45-5.73V,500	
....4	DZ902	0403-000508	DIODE-ZENER;MTZJ5.6B,5.6V,5.45-5.73V,500	
....4	DZ903	0403-000508	DIODE-ZENER;MTZJ5.6B,5.6V,5.45-5.73V,500	
....4	DZ904	0403-000508	DIODE-ZENER;MTZJ5.6B,5.6V,5.45-5.73V,500	
....4	DZ905	0403-000510	DIODE-ZENER;MTZJ6.2B,6.2V,5.96-6.27V,500	
....4	DZ906	0403-000510	DIODE-ZENER;MTZJ6.2B,6.2V,5.96-6.27V,500	
....4	DZ907	0403-000510	DIODE-ZENER;MTZJ6.2B,6.2V,5.96-6.27V,500	
....4	DZ911	0403-000510	DIODE-ZENER;MTZJ6.2B,6.2V,5.96-6.27V,500	
....4	DZ912	0403-000508	DIODE-ZENER;MTZJ5.6B,5.6V,5.45-5.73V,500	
....4	DZ914	0403-000508	DIODE-ZENER;MTZJ5.6B,5.6V,5.45-5.73V,500	
....4	DZ915	0403-000508	DIODE-ZENER;MTZJ5.6B,5.6V,5.45-5.73V,500	
....4	F901	2901-000297	FILTER-EMI ON BOARD;-,3A,-,-,-,3.5x5,TP,-	
....4	FI103	2903-000181	FILTER-CERAMIC;BR,5.5MHz,-,-,-,TP,TPS5.5	
....4	FI104	2903-000129	FILTER-CERAMIC;BR,4.5MHz,-,-,-,TP,-	
⚠ 4	IC506	1203-000293	IC-POSI.FIXED REG.;7808,TO-220,3P,-,PLAS	
⚠ 4	IC904	1203-000515	IC-VOL. DETECTOR;7042,TO-92,3P,177MIL,PL	
....4	L101	2701-000115	INDUCTOR-AXIAL;10uH,10%,3x7mm	
....4	L103	2701-000115	INDUCTOR-AXIAL;10uH,10%,3x7mm	
....4	L106	2701-000115	INDUCTOR-AXIAL;10uH,10%,3x7mm	
....4	L107	2701-000115	INDUCTOR-AXIAL;10uH,10%,3x7mm	
....4	L108	2701-000115	INDUCTOR-AXIAL;10uH,10%,3x7mm	
....4	L109	2701-000101	INDUCTOR-AXIAL;1.2uH,10%,2.5x3.4mm	
....4	L110	2701-000115	INDUCTOR-AXIAL;10uH,10%,3x7mm	
....4	L111	2701-000120	INDUCTOR-AXIAL;12uH,10%,2.5x3.4mm	
....4	L112	2701-000299	INDUCTOR-AXIAL;13UH,10%,2.5X3.4MM	
....4	L113	AA26-10006G	TRANS-IF;-,7mG,VIF,-,7mm,8pF,77.8MHz,ST	
....4	L114	2701-000114	INDUCTOR-AXIAL;10uH,10%,2.5x3.4mm	
....4	L115	2701-000114	INDUCTOR-AXIAL;10uH,10%,2.5x3.4mm	
....4	L116	2701-000114	INDUCTOR-AXIAL;10uH,10%,2.5x3.4mm	
....4	L117	2701-000114	INDUCTOR-AXIAL;10uH,10%,2.5x3.4mm	
....4	L118	2701-000115	INDUCTOR-AXIAL;10uH,10%,3x7mm	
....4	L501	2701-000114	INDUCTOR-AXIAL;10uH,10%,2.5x3.4mm	
....4	L502	2701-000114	INDUCTOR-AXIAL;10uH,10%,2.5x3.4mm	
....4	L503	2701-000114	INDUCTOR-AXIAL;10uH,10%,2.5x3.4mm	
....4	L504	2701-000114	INDUCTOR-AXIAL;10uH,10%,2.5x3.4mm	
....4	L505	2901-000297	FILTER-EMI ON BOARD;-,3A,-,-,-,3.5x5,TP,-	
....4	L506	3301-000287	CORE-FERRITE BEAD;AA,3.5x1.0x6.0mm,1500,	
....4	L507	3301-000287	CORE-FERRITE BEAD;AA,3.5x1.0x6.0mm,1500,	
....4	L514	3301-000287	CORE-FERRITE BEAD;AA,3.5x1.0x6.0mm,1500,	
....4	L515	3301-000287	CORE-FERRITE BEAD;AA,3.5x1.0x6.0mm,1500,	
....4	L601	2701-000114	INDUCTOR-AXIAL;10uH,10%,2.5x3.4mm	
....4	L602	2701-000114	INDUCTOR-AXIAL;10uH,10%,2.5x3.4mm	
....4	L604	3301-000287	CORE-FERRITE BEAD;AA,3.5x1.0x6.0mm,1500,	
....4	L901	2901-000297	FILTER-EMI ON BOARD;-,3A,-,-,-,3.5x5,TP,-	
....4	L902	2701-000115	INDUCTOR-AXIAL;10uH,10%,3x7mm	
....4	L903	2701-001040	INDUCTOR-AXIAL;10uH,10%,4.5x14mm	

Level	Loc. No.	Code No.	Description ; Specification	Remark
....4	L907	3301-000287	CORE-FERRITE BEAD;AA,3.5x1.0x6.0mm,1500,	
....4	L909	2701-000114	INDUCTOR-AXIAL;10uH,10%,2.5x3.4mm	
....4	L910	2701-000114	INDUCTOR-AXIAL;10uH,10%,2.5x3.4mm	
....4	L911	2701-000114	INDUCTOR-AXIAL;10uH,10%,2.5x3.4mm	
....4	L912	2701-000114	INDUCTOR-AXIAL;10uH,10%,2.5x3.4mm	
....4	LD901	2701-000115	INDUCTOR-AXIAL;10uH,10%,3x7mm	
....4	LS801	2901-000297	FILTER-EMI ON BOARD;-,3A,-,-,-,3.5x5,TP,-	
....4	LS802	2901-000297	FILTER-EMI ON BOARD;-,3A,-,-,-,3.5x5,TP,-	
....4	LS803	3301-000287	CORE-FERRITE BEAD;AA,3.5x1.0x6.0mm,1500,	
....4	LZ112	2701-000002	INDUCTOR-AXIAL;100uH,10%,4.2x9.8mm	
....4	PCB	AA41-00075A	PCB-MAIN;J51A,1L,FR-1,330X245X1.6T,1A,-	S.N.A
....4	Q101	0504-000137	TR-DIGITAL;KSR1202,NPN,300mW,10K/10K,TO-	
....4	Q102	0504-000123	TR-DIGITAL;KSR1010,NPN,300mW,10K,TO-92,T	
....4	Q103	0501-000245	TR-SMALL SIGNAL;BC548C,NPN,500mW,TO-92,T	
....4	Q104	0504-000123	TR-DIGITAL;KSR1010,NPN,300mW,10K,TO-92,T	
....4	Q105	0501-000389	TR-SMALL SIGNAL;KSC815,NPN,400mW,TO-92,T	
....4	Q106	0504-000150	TR-DIGITAL;KSR2010,PNP,300mW,10K,TO-92,T	
....4	Q107	0504-000123	TR-DIGITAL;KSR1010,NPN,300mW,10K,TO-92,T	
....4	Q665	0501-000389	TR-SMALL SIGNAL;KSC815,NPN,400mW,TO-92,T	
....4	Q666	0501-000389	TR-SMALL SIGNAL;KSC815,NPN,400mW,TO-92,T	
....4	Q667	0501-000389	TR-SMALL SIGNAL;KSC815,NPN,400mW,TO-92,T	
....4	Q701	0501-000389	TR-SMALL SIGNAL;KSC815,NPN,400mW,TO-92,T	
....4	Q702	0501-000389	TR-SMALL SIGNAL;KSC815,NPN,400mW,TO-92,T	
....4	Q901	0501-000389	TR-SMALL SIGNAL;KSC815,NPN,400mW,TO-92,T	
....4	Q902	0501-000389	TR-SMALL SIGNAL;KSC815,NPN,400mW,TO-92,T	
....4	Q903	0501-000389	TR-SMALL SIGNAL;KSC815,NPN,400mW,TO-92,T	
....4	Q909	0501-000283	TR-SMALL SIGNAL;KSA539,PNP,400mW,TO-92,T	
....4	Q910	0501-000389	TR-SMALL SIGNAL;KSC815,NPN,400mW,TO-92,T	
....4	QS801	0501-000369	TR-SMALL SIGNAL;KSC2331-Y,NPN,1W,TO-92L,	
....4	QZ103	0501-000389	TR-SMALL SIGNAL;KSC815,NPN,400mW,TO-92,T	
....4	QZ104	0501-000389	TR-SMALL SIGNAL;KSC815,NPN,400mW,TO-92,T	
....4	QZ105	0501-000389	TR-SMALL SIGNAL;KSC815,NPN,400mW,TO-92,T	
....4	QZ106	0501-000283	TR-SMALL SIGNAL;KSA539,PNP,400mW,TO-92,T	
....4	R123	2001-000429	R-CARBON;1KOHM,5%,1/8W,AA,TP,1.8X3.2MM	
....4	R131	2001-000739	R-CARBON;4.7MOHM,5%,1/8W,AA,TP,1.8X3.2M	
....4	R132	2001-000739	R-CARBON;4.7MOHM,5%,1/8W,AA,TP,1.8X3.2M	
....4	R142	2001-000281	R-CARBON;100OHM,5%,1/8W,AA,TP,1.8X3.2MM	
....4	R145	2001-000890	R-CARBON;6.8KOHM,5%,1/8W,AA,TP,1.8X3.2M	
....4	R146	2001-000362	R-CARBON;150OHM,5%,1/8W,AA,TP,1.8X3.2MM	
....4	R148	2001-000290	R-CARBON;10KOHM,5%,1/8W,AA,TP,1.8X3.2MM	
....4	R149	2001-000331	R-CARBON;12KOHM,5%,1/8W,AA,TP,1.8X3.2MM	
....4	R150	2001-000290	R-CARBON;10KOHM,5%,1/8W,AA,TP,1.8X3.2MM	
....4	R151	2001-000313	R-CARBON;11KOHM,5%,1/8W,AA,TP,1.8X3.2MM	
....4	R152	2001-000449	R-CARBON;2.2KOHM,5%,1/8W,AA,TP,1.8X3.2M	
....4	R153	2001-000449	R-CARBON;2.2KOHM,5%,1/8W,AA,TP,1.8X3.2M	
....4	R154	2001-000449	R-CARBON;2.2KOHM,5%,1/8W,AA,TP,1.8X3.2M	
....4	R155	2001-000522	R-CARBON;22KOHM,5%,1/8W,AA,TP,1.8X3.2MM	
....4	R156	2001-000241	R-CARBON;1.5KOHM,5%,1/8W,AA,TP,1.8X3.2M	
....4	R157	2001-000241	R-CARBON;1.5KOHM,5%,1/8W,AA,TP,1.8X3.2M	
....4	R158	2001-000857	R-CARBON;560OHM,5%,1/8W,AA,TP,1.8X3.2MM	
....4	R159	2001-000864	R-CARBON;56KOHM,5%,1/8W,AA,TP,1.8X3.2MM	
....4	R160	2001-000786	R-CARBON;47KOHM,5%,1/8W,AA,TP,1.8X3.2MM	
....4	R161	2001-000005	R-CARBON;390ohm,5%,1/8W,AA,TP,1.8x3.2mm	
....4	R162	2001-000969	R-CARBON;75OHM,5%,1/8W,AA,TP,1.8X3.2MM	
....4	R163	2001-000515	R-CARBON;220OHM,5%,1/8W,AA,TP,1.8X3.2MM	
....4	R164	2001-000490	R-CARBON;200OHM,5%,1/8W,AA,TP,1.8X3.2MM	
....4	R165	2001-000515	R-CARBON;220OHM,5%,1/8W,AA,TP,1.8X3.2MM	
....4	R166	2001-000429	R-CARBON;1KOHM,5%,1/8W,AA,TP,1.8X3.2MM	
....4	R167	2001-000522	R-CARBON;22KOHM,5%,1/8W,AA,TP,1.8X3.2MM	
....4	R168	2001-000522	R-CARBON;22KOHM,5%,1/8W,AA,TP,1.8X3.2MM	
....4	R169	2001-000734	R-CARBON;4.7KOHM,5%,1/8W,AA,TP,1.8X3.2M	
....4	R501	2001-000066	R-CARBON(S);10KOHM,5%,1/2W,AA,TP,2.4X6.4	
....4	R502	2001-000281	R-CARBON;100OHM,5%,1/8W,AA,TP,1.8X3.2MM	
....4	R503	2001-000281	R-CARBON;100OHM,5%,1/8W,AA,TP,1.8X3.2MM	
....4	R504	2001-000405	R-CARBON;180OHM,5%,1/8W,AA,TP,1.8X3.2MM	
....4	R509	2008-000266	R-FUSIBLE(S);1ohm,5%,2W,AF,TP,3.9x10mm	
....4	R510	2008-000266	R-FUSIBLE(S);1ohm,5%,2W,AF,TP,3.9x10mm	
....4	R511	2008-001116	R-FUSIBLE(S);0.68ohm,10%,2W,AG,TP,3.9x12	
....4	R512	2001-000003	R-CARBON;330ohm,5%,1/8W,AA,TP,1.8x3.2mm	
....4	R524	2001-000739	R-CARBON;4.7MOHM,5%,1/8W,AA,TP,1.8X3.2M	
....4	R525	2001-000739	R-CARBON;4.7MOHM,5%,1/8W,AA,TP,1.8X3.2M	
....4	R526	2001-000739	R-CARBON;4.7MOHM,5%,1/8W,AA,TP,1.8X3.2M	
....4	R531	2001-000739	R-CARBON;4.7MOHM,5%,1/8W,AA,TP,1.8X3.2M	
....4	R532	2001-000037	R-CARBON(S);330OHM,5%,1/2W,AA,TP,2.4X6.4	
....4	R533	2001-000739	R-CARBON;4.7MOHM,5%,1/8W,AA,TP,1.8X3.2M	
....4	R601	2001-000109	R-CARBON(S);470OHM,5%,1/2W,AA,TP,2.4X6.4	

Level	Loc. No.	Code No.	Description ; Specification	Remark
....4	R602	2001-000605	R-CARBON;3.6KOHM,5%,1/8W,AA,TP,1.8X3.2M	
....4	R603	2001-000734	R-CARBON;4.7KOHM,5%,1/8W,AA,TP,1.8X3.2M	
....4	R661	2001-001093	R-CARBON(S);2.2KOHM,5%,1/2W,AA,TP,2.4X6.	
....4	R662	2001-001093	R-CARBON(S);2.2KOHM,5%,1/2W,AA,TP,2.4X6.	
....4	R665	2001-001188	R-CARBON(S);8.2KOHM,5%,1/2W,AA,TP,2.4X6.	
....4	R666	2001-001188	R-CARBON(S);8.2KOHM,5%,1/2W,AA,TP,2.4X6.	
....4	R668	2001-000028	R-CARBON(S);100OHM,5%,1/2W,AA,TP,2.4X6.4	
....4	R669	2001-001144	R-CARBON(S);4.7KOHM,5%,1/2W,AA,TP,2.4X6.	
....4	R670	2001-000085	R-CARBON(S);100KOHM,5%,1/2W,AA,TP,2.4X6.	
....4	R671	2001-000066	R-CARBON(S);10KOHM,5%,1/2W,AA,TP,2.4X6.4	
....4	R672	2001-000066	R-CARBON(S);10KOHM,5%,1/2W,AA,TP,2.4X6.4	
....4	R673	2001-000411	R-CARBON;18KOHM,5%,1/8W,AA,TP,1.8X3.2MM	
....4	R674	2001-000780	R-CARBON;470OHM,5%,1/8W,AA,TP,1.8X3.2MM	
....4	R675	2001-000066	R-CARBON(S);10KOHM,5%,1/2W,AA,TP,2.4X6.4	
....4	R676	2001-000812	R-CARBON;5.6KOHM,5%,1/8W,AA,TP,1.8X3.2M	
....4	R677	2001-000290	R-CARBON;10KOHM,5%,1/8W,AA,TP,1.8X3.2MM	
....4	R678	2001-000008	R-CARBON;15KOHM,5%,1/8W,AA,TP,1.8X3.2MM	
....4	R679	2001-001071	R-CARBON(S);12KOHM,5%,1/2W,AA,TP,2.4X6.4	
....4	R680	2001-001000	R-CARBON;82KOHM,5%,1/8W,AA,TP,1.8X3.2MM	
....4	R681	2001-001093	R-CARBON(S);2.2KOHM,5%,1/2W,AA,TP,2.4X6.	
....4	R682	2004-001897	R-METAL(S);43.2Kohm,1%,1/2W,AA,TP,2.5x6.	
....4	R683	2004-001897	R-METAL(S);43.2Kohm,1%,1/2W,AA,TP,2.5x6.	
....4	R684	2001-001093	R-CARBON(S);2.2KOHM,5%,1/2W,AA,TP,2.4X6.	
....4	R685	2004-001390	R-METAL(S);1Kohm,2%,1/2W,AA,TP,2.4x6.4mm	
....4	R686	2004-001390	R-METAL(S);1Kohm,2%,1/2W,AA,TP,2.4x6.4mm	
....4	R687	2001-001146	R-CARBON(S);4.7OHM,5%,1/2W,AA,TP,2.4X6.4	
....4	R689	2001-001146	R-CARBON(S);4.7OHM,5%,1/2W,AA,TP,2.4X6.4	
....4	R690	2001-000734	R-CARBON;4.7KOHM,5%,1/8W,AA,TP,1.8X3.2M	
....4	R701	2001-000786	R-CARBON;47KOHM,5%,1/8W,AA,TP,1.8X3.2MM	
....4	R702	2001-000290	R-CARBON;10KOHM,5%,1/8W,AA,TP,1.8X3.2MM	
....4	R703	2001-000290	R-CARBON;10KOHM,5%,1/8W,AA,TP,1.8X3.2MM	
....4	R704	2001-000290	R-CARBON;10KOHM,5%,1/8W,AA,TP,1.8X3.2MM	
....4	R801	2003-001098	R-METAL OXIDE(S);22Kohm,5%,3W,AA,TP,6x16	
....4	R901	2001-000734	R-CARBON;4.7KOHM,5%,1/8W,AA,TP,1.8X3.2M	
....4	R903	2001-000429	R-CARBON;1KOHM,5%,1/8W,AA,TP,1.8X3.2MM	
....4	R904	2001-000290	R-CARBON;10KOHM,5%,1/8W,AA,TP,1.8X3.2MM	
....4	R905	2001-000734	R-CARBON;4.7KOHM,5%,1/8W,AA,TP,1.8X3.2M	
....4	R906	2001-000429	R-CARBON;1KOHM,5%,1/8W,AA,TP,1.8X3.2MM	
....4	R907	2001-000429	R-CARBON;1KOHM,5%,1/8W,AA,TP,1.8X3.2MM	
....4	R908	2001-000281	R-CARBON;100OHM,5%,1/8W,AA,TP,1.8X3.2MM	
....4	R909	2001-000281	R-CARBON;100OHM,5%,1/8W,AA,TP,1.8X3.2MM	
....4	R910	2001-000281	R-CARBON;100OHM,5%,1/8W,AA,TP,1.8X3.2MM	
....4	R912	2001-000003	R-CARBON;330ohm,5%,1/8W,AA,TP,1.8x3.2mm	
....4	R914	2001-000281	R-CARBON;100OHM,5%,1/8W,AA,TP,1.8X3.2MM	
....4	R915	2001-000281	R-CARBON;100OHM,5%,1/8W,AA,TP,1.8X3.2MM	
....4	R916	2001-000472	R-CARBON;2.7KOHM,5%,1/8W,AA,TP,1.8X3.2M	
....4	R917	2001-000472	R-CARBON;2.7KOHM,5%,1/8W,AA,TP,1.8X3.2M	
....4	R918	2001-000832	R-CARBON;510OHM,5%,1/8W,AA,TP,1.8X3.2MM	
....4	R919	2001-000591	R-CARBON;3.3KOHM,5%,1/8W,AA,TP,1.8X3.2M	
....4	R921	2001-000812	R-CARBON;5.6KOHM,5%,1/8W,AA,TP,1.8X3.2M	
....4	R922	2001-000812	R-CARBON;5.6KOHM,5%,1/8W,AA,TP,1.8X3.2M	
....4	R923	2001-000786	R-CARBON;47KOHM,5%,1/8W,AA,TP,1.8X3.2MM	
....4	R924	2001-000786	R-CARBON;47KOHM,5%,1/8W,AA,TP,1.8X3.2MM	
....4	R925	2001-000241	R-CARBON;1.5KOHM,5%,1/8W,AA,TP,1.8X3.2M	
....4	R926	2001-000241	R-CARBON;1.5KOHM,5%,1/8W,AA,TP,1.8X3.2M	
....4	R930	2001-000734	R-CARBON;4.7KOHM,5%,1/8W,AA,TP,1.8X3.2M	
....4	R931	2001-000734	R-CARBON;4.7KOHM,5%,1/8W,AA,TP,1.8X3.2M	
....4	R932	2001-000734	R-CARBON;4.7KOHM,5%,1/8W,AA,TP,1.8X3.2M	
....4	R945	2001-000429	R-CARBON;1KOHM,5%,1/8W,AA,TP,1.8X3.2MM	
....4	R946	2001-000290	R-CARBON;10KOHM,5%,1/8W,AA,TP,1.8X3.2MM	
....4	R947	2001-000290	R-CARBON;10KOHM,5%,1/8W,AA,TP,1.8X3.2MM	
....4	R948	2001-000429	R-CARBON;1KOHM,5%,1/8W,AA,TP,1.8X3.2MM	
....4	R949	2001-000591	R-CARBON;3.3KOHM,5%,1/8W,AA,TP,1.8X3.2M	
....4	R950	2001-000429	R-CARBON;1KOHM,5%,1/8W,AA,TP,1.8X3.2MM	
....4	R951	2001-000591	R-CARBON;3.3KOHM,5%,1/8W,AA,TP,1.8X3.2M	
....4	R952	2001-000281	R-CARBON;100OHM,5%,1/8W,AA,TP,1.8X3.2MM	
....4	R953	2001-000734	R-CARBON;4.7KOHM,5%,1/8W,AA,TP,1.8X3.2M	
....4	R954	2001-000281	R-CARBON;100OHM,5%,1/8W,AA,TP,1.8X3.2MM	
....4	R955	2001-000734	R-CARBON;4.7KOHM,5%,1/8W,AA,TP,1.8X3.2M	
....4	R958	2001-000281	R-CARBON;100OHM,5%,1/8W,AA,TP,1.8X3.2MM	
....4	R959	2001-000281	R-CARBON;100OHM,5%,1/8W,AA,TP,1.8X3.2MM	
....4	R960	2001-000281	R-CARBON;100OHM,5%,1/8W,AA,TP,1.8X3.2MM	
....4	R961	2001-000734	R-CARBON;4.7KOHM,5%,1/8W,AA,TP,1.8X3.2M	
....4	R962	2001-000864	R-CARBON;56KOHM,5%,1/8W,AA,TP,1.8X3.2MM	
....4	R967	2001-000429	R-CARBON;1KOHM,5%,1/8W,AA,TP,1.8X3.2MM	
....4	R968	2001-000429	R-CARBON;1KOHM,5%,1/8W,AA,TP,1.8X3.2MM	
....4	R970	2001-000472	R-CARBON;2.7KOHM,5%,1/8W,AA,TP,1.8X3.2M	
....4	R971	2001-000780	R-CARBON;470OHM,5%,1/8W,AA,TP,1.8X3.2MM	
....4	R974	2001-000734	R-CARBON;4.7KOHM,5%,1/8W,AA,TP,1.8X3.2M	
....4	R977	2001-001062	R-CARBON(S);10MOHM,5%,1/2W,AA,TP,2.4X6.4	
....4	R979	2001-000281	R-CARBON;100OHM,5%,1/8W,AA,TP,1.8X3.2MM	
....4	R980	2001-000290	R-CARBON;10KOHM,5%,1/8W,AA,TP,1.8X3.2MM	
....4	R981	2001-000577	R-CARBON;2KOHM,5%,1/8W,AA,TP,1.8X3.2MM	
....4	R982	2001-000577	R-CARBON;2KOHM,5%,1/8W,AA,TP,1.8X3.2MM	
....4	R983	2001-000577	R-CARBON;2KOHM,5%,1/8W,AA,TP,1.8X3.2MM	
....4	R984	2001-000429	R-CARBON;1KOHM,5%,1/8W,AA,TP,1.8X3.2MM	
....4	R985	2001-000786	R-CARBON;47KOHM,5%,1/8W,AA,TP,1.8X3.2MM	
....4	R986	2001-000429	R-CARBON;1KOHM,5%,1/8W,AA,TP,1.8X3.2MM	
....4	R987	2001-000780	R-CARBON;470OHM,5%,1/8W,AA,TP,1.8X3.2MM	
....4	R988	2001-000281	R-CARBON;100OHM,5%,1/8W,AA,TP,1.8X3.2MM	
....4	R989	2001-000281	R-CARBON;100OHM,5%,1/8W,AA,TP,1.8X3.2MM	
....4	R990	2001-000281	R-CARBON;100OHM,5%,1/8W,AA,TP,1.8X3.2MM	
....4	R991	2001-000281	R-CARBON;100OHM,5%,1/8W,AA,TP,1.8X3.2MM	
....4	R992	2001-000472	R-CARBON;2.7KOHM,5%,1/8W,AA,TP,1.8X3.2M	
....4	R993	2001-000281	R-CARBON;100OHM,5%,1/8W,AA,TP,1.8X3.2MM	
....4	R994	2001-000281	R-CARBON;100OHM,5%,1/8W,AA,TP,1.8X3.2MM	
....4	RD901	2001-000281	R-CARBON;100OHM,5%,1/8W,AA,TP,1.8X3.2MM	
....4	RD903	2001-000734	R-CARBON;4.7KOHM,5%,1/8W,AA,TP,1.8X3.2M	
....4	RF802	2008-000294	R-FUSIBLE(S);33ohm,5%,2W,AF,TP,3.9x10mm	
....4	RS801	2003-002194	R-METAL OXIDE(S);1.8Kohm,5%,1W,AF,TP,2.5	
....4	RS802	2001-001192	R-CARBON(S);820OHM,5%,1/2W,AA,TP,2.4X6.4	
....4	RS803	2001-001159	R-CARBON(S);510OHM,5%,1/2W,AA,TP,2.4X6.4	
....4	RS804	2001-001182	R-CARBON(S);7.5KOHM,5%,1/2W,AA,TP,2.4X6.	
....4	RS805	2001-001107	R-CARBON(S);220ohm,5%,1/2W,AA,TP,2.4x6.4	
....4	RS806	2001-001159	R-CARBON(S);510OHM,5%,1/2W,AA,TP,2.4X6.4	
....4	RS807	2001-000739	R-CARBON;4.7MOHM,5%,1/8W,AA,TP,1.8X3.2M	
....4	RZ153	2008-001086	R-FUSIBLE(S);3.3ohm,5%,2W,AG,TP,3.9x12mm	
....4	RZ154	2003-000532	R-METAL OXIDE(S);18ohm,5%,2W,AF,TP,4x12m	
....4	RZ156	2001-001159	R-CARBON(S);510OHM,5%,1/2W,AA,TP,2.4X6.4	
....4	RZ165	2001-000331	R-CARBON;12KOHM,5%,1/8W,AA,TP,1.8X3.2MM	
....4	RZ166	2001-000258	R-CARBON;1.8KOHM,5%,1/8W,AA,TP,1.8X3.2M	
....4	RZ167	2001-000258	R-CARBON;1.8KOHM,5%,1/8W,AA,TP,1.8X3.2M	
....4	RZ167A	2001-000554	R-CARBON;270OHM,5%,1/8W,AA,TP,1.8X3.2MM	
....4	RZ168	2003-002157	R-METAL OXIDE;220OHM,5%,2W,AG,TP,6X16MM	
....4	RZ169	2001-000019	R-CARBON(S);10OHM,5%,1/2W,AA,TP,2.4X6.4M	
....4	RZ170	2001-000666	R-CARBON;33OHM,5%,1/8W,AA,TP,1.8X3.2MM	
....4	RZ171	2001-000666	R-CARBON;33OHM,5%,1/8W,AA,TP,1.8X3.2MM	
....4	RZ172	2001-000241	R-CARBON;1.5KOHM,5%,1/8W,AA,TP,1.8X3.2M	
....4	RZ173	2001-001139	R-CARBON(S);39KOHM,5%,1/2W,AA,TP,2.4X6.4	
....4	RZ174	2001-001139	R-CARBON(S);39KOHM,5%,1/2W,AA,TP,2.4X6.4	
....4	RZ175	2001-000241	R-CARBON;1.5KOHM,5%,1/8W,AA,TP,1.8X3.2M	
....4	RZ176	2001-000221	R-CARBON;1.2KOHM,5%,1/8W,AA,TP,1.8X3.2M	
....4	RZ177	2001-000331	R-CARBON;12KOHM,5%,1/8W,AA,TP,1.8X3.2MM	
....4	RZ178	2001-000221	R-CARBON;1.2KOHM,5%,1/8W,AA,TP,1.8X3.2M	
....4	RZ179	2003-000713	R-METAL OXIDE(S);47ohm,5%,2W,AF,TP,4x12m	
....4	RZ180	2001-001100	R-CARBON(S);2.7OHM,5%,1/2W,AA,TP,2.4X6.4	
....4	RZ181	2001-001100	R-CARBON(S);2.7OHM,5%,1/2W,AA,TP,2.4X6.4	
....4	RZ182	2003-000713	R-METAL OXIDE(S);47ohm,5%,2W,AF,TP,4x12m	
....4	RZ183	2003-002157	R-METAL OXIDE;220OHM,5%,2W,AG,TP,6X16MM	
....4	RZ184	2003-002157	R-METAL OXIDE;220OHM,5%,2W,AG,TP,6X16MM	
....4	VR101	2103-000672	VR-SEMI;20Kohm,25%,1/5W,TOP	
..2		AA95-00644A	ASSY-PCB,TTX;-,SP43J5HF,J51A,-,-,ENG VER	
...3	CNT01	3711-002709	CONNECTOR-HEADER;NOWALL,12P,1R,2.5MM,ANG	
...3	CNT02	3711-002707	CONNECTOR-HEADER;NOWALL,9P,1R,2.5mm,ANGL	
⚠ ...3	ICT01	AA13-00046A	IC-MCU;SDA545x-OTP 13B,OTP,ST,64K,-,D	
⚠ ...3	ICT02	1103-001197	IC-EEPROM;24C04-PC C,256X8Bit,DIP,8P,300	
⚠ ...3	ICT04	1001-000223	IC-VIDEO SWITCH;TEA5114A,-,DIP,16P,334MI	
...3	XT01	2801-000724	CRYSTAL-UNIT;6MHz,50ppm,28-AAM,20pF,40oh	
...3		AA99-20079Q	ASSY-PCB SUB,AUTO; AA99-30187G ,V	S.N.A
....4	CT01	2401-002009	C-AL;100uF,20%,16V,GP,TP,6.3x7,5	
....4	CT02	2203-000218	C-CERAMIC,CHIP;100nF,20%,50V,Y5V,TP,2012	
....4	CT03	2203-000218	C-CERAMIC,CHIP;100nF,20%,50V,Y5V,TP,2012	
....4	CT04	2203-000818	C-CERAMIC,CHIP;0.033nF,5%,50V,NP0,TP,201	
....4	CT05	2203-000818	C-CERAMIC,CHIP;0.033nF,5%,50V,NP0,TP,201	
....4	CT06	2401-000486	C-AL;10uF,20%,50V,GP,TP,6.3x7mm,5	
....4	CT07	2203-000802	C-CERAMIC,CHIP;33nF,10%,50V,X7R,TP,2012	
....4	CT08	2401-002009	C-AL;100uF,20%,16V,GP,TP,6.3x7,5	
....4	CT09	2203-000218	C-CERAMIC,CHIP;100nF,20%,50V,Y5V,TP,2012	
....4	CT10	2203-000260	C-CERAMIC,CHIP;10nF,10%,50V,X7R,TP,2012	
....4	CT12	2203-000802	C-CERAMIC,CHIP;33nF,10%,50V,X7R,TP,2012	
....4	CT13	2401-002009	C-AL;100uF,20%,16V,GP,TP,6.3x7,5	
....4	CT14	2203-000218	C-CERAMIC,CHIP;100nF,20%,50V,Y5V,TP,2012	
....4	CT15	2203-000575	C-CERAMIC,CHIP;220NF,10%,25V,X7R,TP,2012	
....4	CT16	2203-000575	C-CERAMIC,CHIP;220NF,10%,25V,X7R,TP,2012	

Level	Loc. No.	Code No.	Description ; Specification	Remark
....4	CT17	2203-000575	C-CERAMIC,CHIP;220NF,10%,25V,X7R,TP,2012	
....4	CT18	2203-000575	C-CERAMIC,CHIP;220NF,10%,25V,X7R,TP,2012	
....4	CT19	2203-000575	C-CERAMIC,CHIP;220NF,10%,25V,X7R,TP,2012	
....4	CT20	2203-000575	C-CERAMIC,CHIP;220NF,10%,25V,X7R,TP,2012	
....4	CT21	2401-000302	C-AL;100uF,20%,25V,GP,TP,6.3x11,5	
....4	CT22	2203-000218	C-CERAMIC,CHIP;100nF,20%,50V,Y5V,TP,2012	
....4	CT23	2401-002009	C-AL;100uF,20%,16V,GP,TP,6.3x7,5	
....4	CT24	2203-000218	C-CERAMIC,CHIP;100nF,20%,50V,Y5V,TP,2012	
....4	DZT01	0403-001016	DIODE-ZENER;RLZ6.2B,6.2V,5.96-6.27V,400m	
....4	DZT02	0403-001117	DIODE-ZENER;RLZ12B,5%,500mW,LL-34,TP	
⚠ 4	ICT03	1203-000515	IC-VOL. DETECTOR;7042,TO-92,3P,177MIL,PL	
⚠ 4	ICT05	0801-000410	IC-CMOS LOGIC;74HC32,OR GATE,SOP,14P,150	
....4	JT03	2007-000029	R-CHIP;0OHM,5%,1/10W,DA,TP,2012	
....4	LT01	2702-001094	INDUCTOR-RADIAL;10uH,10%,6x4mm	
....4	LT02	2702-001094	INDUCTOR-RADIAL;10uH,10%,6x4mm	
....4	LT03	2702-001094	INDUCTOR-RADIAL;10uH,10%,6x4mm	
....4	LT04	2702-001094	INDUCTOR-RADIAL;10uH,10%,6x4mm	
....4	LT05	2702-001094	INDUCTOR-RADIAL;10uH,10%,6x4mm	
....4	PCB	AA41-00276A	PCB-TTX;SP43J5MF,FR-4,2L,A,1.6T,180x24	S.N.A
....4	RT01	2007-000290	R-CHIP;100OHM,5%,1/10W,DA,TP,2012	
....4	RT02	2007-000290	R-CHIP;100OHM,5%,1/10W,DA,TP,2012	
....4	RT03	2007-000290	R-CHIP;100OHM,5%,1/10W,DA,TP,2012	
....4	RT04	2007-000300	R-CHIP;10KOHM,5%,1/10W,DA,TP,2012	
....4	RT05	2007-000300	R-CHIP;10KOHM,5%,1/10W,DA,TP,2012	
....4	RT06	2007-000300	R-CHIP;10KOHM,5%,1/10W,DA,TP,2012	
....4	RT07	2007-000872	R-CHIP;4.7KOHM,5%,1/10W,DA,TP,2012	
....4	RT08	2007-000872	R-CHIP;4.7KOHM,5%,1/10W,DA,TP,2012	
....4	RT09	2007-000872	R-CHIP;4.7KOHM,5%,1/10W,DA,TP,2012	
....4	RT10	2007-000300	R-CHIP;10KOHM,5%,1/10W,DA,TP,2012	
....4	RT11	2007-000300	R-CHIP;10KOHM,5%,1/10W,DA,TP,2012	
....4	RT12	2007-000941	R-CHIP;47KOHM,5%,1/10W,DA,TP,2012	
....4	RT13	2007-000518	R-CHIP;2.7KOHM,5%,1/10W,DA,TP,2012	
....4	RT14	2007-000653	R-CHIP;27KOHM,5%,1/10W,DA,TP,2012	
....4	RT15	2007-000477	R-CHIP;1MOHM,5%,1/10W,DA,TP,2012	
....4	RT16	2007-000290	R-CHIP;100OHM,5%,1/10W,DA,TP,2012	
....4	RT18	2007-000300	R-CHIP;10KOHM,5%,1/10W,DA,TP,2012	
....4	RT22	2007-000300	R-CHIP;10KOHM,5%,1/10W,DA,TP,2012	
....4	RT26	2007-000290	R-CHIP;100OHM,5%,1/10W,DA,TP,2012	
....4	RT27	2007-000290	R-CHIP;100OHM,5%,1/10W,DA,TP,2012	
....4	RT28	2007-000290	R-CHIP;100OHM,5%,1/10W,DA,TP,2012	
....4	RT29	2007-000290	R-CHIP;100OHM,5%,1/10W,DA,TP,2012	
....4	RT30	2007-000290	R-CHIP;100OHM,5%,1/10W,DA,TP,2012	
....4	RT31	2007-000572	R-CHIP;220OHM,5%,1/10W,DA,TP,2012	
....4	RT32	2007-000728	R-CHIP;300OHM,5%,1/10W,DA,TP,2012	
....4	RT33	2007-000572	R-CHIP;220OHM,5%,1/10W,DA,TP,2012	
....4	RT34	2007-000728	R-CHIP;300OHM,5%,1/10W,DA,TP,2012	
....4	RT35	2007-000572	R-CHIP;220OHM,5%,1/10W,DA,TP,2012	
....4	RT36	2007-000728	R-CHIP;300OHM,5%,1/10W,DA,TP,2012	
...3		0202-000187	SOLDER-WIRE FLUX;-,RS60S,D1.2,63Sn/37Pb	S.N.A
...3		0202-001004	SOLDER-CREAM;SQ-2030M SZH-1,S63A,D0.04,6	S.N.A
...3		AA63-40014A	SHIELD-CASE,T;-,SPTE,T0.5,SCT51A,-	S.N.A
..2		AA95-00427A	ASSY-SOUND;-,SP43J5P3S/XTT,J51A,-,-,CHIN	
...3	CN601A	3711-003626	CONNECTOR-HEADER;NOWALL,20P,1R,2.5mm,ANG	
...3	CN602A	3711-003626	CONNECTOR-HEADER;NOWALL,20P,1R,2.5mm,ANG	
...3	LD603	2701-000170	INDUCTOR-AXIAL;3.9uH,10%,3x7mm	
...3		AA99-20060M	ASSY-PCB SUB,AUTO; AA95-00427A ,V	S.N.A
....4	C614	2401-000962	C-AL;22uF,20%,50V,GP,TP,5x11,5	
....4	C615	2203-000595	C-CERAMIC,CHIP;0.22nF,5%,50V,NP0,TP,2012	
....4	C616	2203-000938	C-CERAMIC,CHIP;0.47nF,5%,50V,NP0,TP,2012	
....4	C617	2203-000142	C-CERAMIC,CHIP;1.5nF,10%,50V,X7R,TP,2012	
....4	C618	2203-000444	C-CERAMIC,CHIP;1nF,10%,50V,X7R,TP,2012,-	
....4	C619	2203-000444	C-CERAMIC,CHIP;1nF,10%,50V,X7R,TP,2012,-	
....4	C620	2401-000660	C-AL;2.2uF,20%,50V,GP,TP,5x11,5	
....4	C621	2401-000660	C-AL;2.2uF,20%,50V,GP,TP,5x11,5	
....4	C622	2203-000701	C-CERAMIC,CHIP;0.002nF,0.25pF,50V,NP0,TP	
....4	C623	2203-000701	C-CERAMIC,CHIP;0.002nF,0.25pF,50V,NP0,TP	
....4	C624	2203-001077	C-CERAMIC,CHIP;0.056nF,5%,50V,NP0,TP,201	
....4	C625	2203-001077	C-CERAMIC,CHIP;0.056nF,5%,50V,NP0,TP,201	
....4	C626	2401-000962	C-AL;22uF,20%,50V,GP,TP,5x11,5	
....4	C627	2203-000938	C-CERAMIC,CHIP;0.47nF,5%,50V,NP0,TP,2012	
....4	C628	2203-000142	C-CERAMIC,CHIP;1.5nF,10%,50V,X7R,TP,2012	
....4	C629	2203-001077	C-CERAMIC,CHIP;0.056nF,5%,50V,NP0,TP,201	
....4	C630	2401-000480	C-AL;10uF,20%,50V,GP,TP,5x11,5	
....4	C631	2203-000218	C-CERAMIC,CHIP;100nF,20%,50V,Y5V,TP,2012	
....4	C632	2401-002229	C-AL;470nF,20%,50V,WT,TP,5x11,5	
....4	C633	2401-002229	C-AL;470nF,20%,50V,WT,TP,5x11,5	
....4	C634	2203-000784	C-CERAMIC,CHIP;0.33nF,5%,50V,NP0,TP,2012	
....4	C635	2203-000784	C-CERAMIC,CHIP;0.33nF,5%,50V,NP0,TP,2012	
....4	C636	2203-000218	C-CERAMIC,CHIP;100nF,20%,50V,Y5V,TP,2012	
....4	C637	2401-000027	C-AL;4.7uF,20%,50V,GP,TP,5x11,5	
....4	C638	2401-002235	C-AL;10uF,20%,16V,GP,TP,5x11mm,5mm	
....4	C639	2401-002235	C-AL;10uF,20%,16V,GP,TP,5x11mm,5mm	
....4	C640	2203-000938	C-CERAMIC,CHIP;0.47nF,5%,50V,NP0,TP,2012	
....4	C641	2203-000142	C-CERAMIC,CHIP;1.5nF,10%,50V,X7R,TP,2012	
....4	C642	2401-000480	C-AL;10uF,20%,50V,GP,TP,5x11,5	
....4	C643	2401-000027	C-AL;4.7uF,20%,50V,GP,TP,5x11,5	
....4	C644	2401-000027	C-AL;4.7uF,20%,50V,GP,TP,5x11,5	
....4	C645	2401-000027	C-AL;4.7uF,20%,50V,GP,TP,5x11,5	
....4	C646	2401-000027	C-AL;4.7uF,20%,50V,GP,TP,5x11,5	
....4	C649	2401-002300	C-AL;47uF,20%,50V,GP,TP,6.3x11,5	
....4	C650	2203-000979	C-CERAMIC,CHIP;47nF,10%,50V,X7R,TP,2012	
....4	C651	2401-000365	C-AL;100uF,20%,50V,WT,TP,10x12.5mm,	
....4	C653	2203-000784	C-CERAMIC,CHIP;0.33nF,5%,50V,NP0,TP,2012	
....4	C654	2401-002229	C-AL;470nF,20%,50V,WT,TP,5x11,5	
....4	C655	2203-000784	C-CERAMIC,CHIP;0.33nF,5%,50V,NP0,TP,2012	
....4	C656	2401-002229	C-AL;470nF,20%,50V,WT,TP,5x11,5	
....4	C657	2401-002229	C-AL;470nF,20%,50V,WT,TP,5x11,5	
....4	C658	2203-000784	C-CERAMIC,CHIP;0.33nF,5%,50V,NP0,TP,2012	
....4	C661	2203-000784	C-CERAMIC,CHIP;0.33nF,5%,50V,NP0,TP,2012	
....4	C662	2401-002229	C-AL;470nF,20%,50V,WT,TP,5x11,5	
....4	C663	2401-002229	C-AL;470nF,20%,50V,WT,TP,5x11,5	
....4	C664	2203-000784	C-CERAMIC,CHIP;0.33nF,5%,50V,NP0,TP,2012	
....4	C667	2203-000784	C-CERAMIC,CHIP;0.33nF,5%,50V,NP0,TP,2012	
....4	C668	2401-002229	C-AL;470nF,20%,50V,WT,TP,5x11,5	
....4	C669	2401-002229	C-AL;470nF,20%,50V,WT,TP,5x11,5	
....4	C670	2203-000784	C-CERAMIC,CHIP;0.33nF,5%,50V,NP0,TP,2012	
....4	C684	2401-000480	C-AL;10uF,20%,50V,GP,TP,5x11,5	
....4	C688	2401-000962	C-AL;22uF,20%,50V,GP,TP,5x11,5	
....4	C691	2401-000962	C-AL;22uF,20%,50V,GP,TP,5x11,5	
....4	C692	2203-000260	C-CERAMIC,CHIP;10nF,10%,50V,X7R,TP,2012	
....4	C695	2203-000761	C-CERAMIC,CHIP;330nF,10%,16V,X7R,TP,2012	
....4	C696	2203-000170	C-CERAMIC,CHIP;1.8nF,10%,50V,X7R,TP,2012	
....4	C697	2203-000170	C-CERAMIC,CHIP;1.8nF,10%,50V,X7R,TP,2012	
....4	CB1	2401-000365	C-AL;100uF,20%,50V,WT,TP,10x12.5mm,	
....4	CD601	2203-000260	C-CERAMIC,CHIP;10nF,10%,50V,X7R,TP,2012	
....4	CD602	2203-000142	C-CERAMIC,CHIP;1.5nF,10%,50V,X7R,TP,2012	
....4	CD603	2401-000962	C-AL;22uF,20%,50V,GP,TP,5x11,5	
....4	CD604	2203-000595	C-CERAMIC,CHIP;0.22nF,5%,50V,NP0,TP,2012	
....4	CD605	2203-000938	C-CERAMIC,CHIP;0.47nF,5%,50V,NP0,TP,2012	
....4	CD606	2401-000962	C-AL;22uF,20%,50V,GP,TP,5x11,5	
....4	CD607	2203-000938	C-CERAMIC,CHIP;0.47nF,5%,50V,NP0,TP,2012	
....4	CD608	2203-000142	C-CERAMIC,CHIP;1.5nF,10%,50V,X7R,TP,2012	
....4	CD609	2203-000218	C-CERAMIC,CHIP;100nF,20%,50V,Y5V,TP,2012	
....4	CD610	2401-000480	C-AL;10uF,20%,50V,GP,TP,5x11,5	
....4	CD611	2203-000218	C-CERAMIC,CHIP;100nF,20%,50V,Y5V,TP,2012	
....4	CD612	2401-000027	C-AL;4.7uF,20%,50V,GP,TP,5x11,5	
....4	CD613	2401-000660	C-AL;2.2uF,20%,50V,GP,TP,5x11,5	
....4	CD615	2401-000660	C-AL;2.2uF,20%,50V,GP,TP,5x11,5	
....4	CD616	2203-000444	C-CERAMIC,CHIP;1nF,10%,50V,X7R,TP,2012,-	
....4	CD618	2203-000444	C-CERAMIC,CHIP;1nF,10%,50V,X7R,TP,2012,-	
....4	CD619	2401-002235	C-AL;10uF,20%,16V,GP,TP,5x11mm,5mm	
....4	CD620	2401-002235	C-AL;10uF,20%,16V,GP,TP,5x11mm,5mm	
....4	CD621	2203-000938	C-CERAMIC,CHIP;0.47nF,5%,50V,NP0,TP,2012	
....4	CD622	2203-000142	C-CERAMIC,CHIP;1.5nF,10%,50V,X7R,TP,2012	
....4	CD623	2401-000480	C-AL;10uF,20%,50V,GP,TP,5x11,5	
....4	CD624	2203-000495	C-CERAMIC,CHIP;2.2nF,10%,50V,X7R,TP,2012	
....4	CD625	2401-000962	C-AL;22uF,20%,50V,GP,TP,5x11,5	
....4	CD626	2203-000495	C-CERAMIC,CHIP;2.2nF,10%,50V,X7R,TP,2012	
....4	CD627	2401-000962	C-AL;22uF,20%,50V,GP,TP,5x11,5	
....4	CD628	2203-000260	C-CERAMIC,CHIP;10nF,10%,50V,X7R,TP,2012	
....4	CD629	2401-000365	C-AL;100uF,20%,50V,WT,TP,10x12.5mm,	
....4	CD630	2203-000761	C-CERAMIC,CHIP;330nF,10%,16V,X7R,TP,2012	
....4	CDB1	2401-000365	C-AL;100uF,20%,50V,WT,TP,10x12.5mm,	
⚠ 4	IC601	1204-001689	IC-SOUND PROCESSOR;MSP3410D-C5,PLCC,68P,	
⚠ 4	IC604	1201-000541	IC-OP AMP;062,SOP,8P,153MIL,DUAL,6V/mV,P	
⚠ 4	ICD601	1204-001198	IC-DECODER;DPL3519A-A2,PLCC,68P,-,PLASTI	
⚠ 4	ICD602	1201-000541	IC-OP AMP;062,SOP,8P,153MIL,DUAL,6V/mV,P	
....4	L601	2701-000170	INDUCTOR-AXIAL;3.9uH,10%,3x7mm	
....4	L602	2701-000170	INDUCTOR-AXIAL;3.9uH,10%,3x7mm	
....4	L603	2701-000112	INDUCTOR-AXIAL;100uH,10%,3x7mm	
....4	LD601	2701-000170	INDUCTOR-AXIAL;3.9uH,10%,3x7mm	
....4	LD602	2701-000112	INDUCTOR-AXIAL;100uH,10%,3x7mm	

Level	Loc. No.	Code No.	Description ; Specification	Remark
....4	PCB	AA41-00087A	PCB-AUDIO;PLT51A,2L,FR-4,180X245X1.6T,3A	S.N.A
....4	Q606	0501-000727	TR-SMALL SIGNAL;BC848C,NPN,310mW,SOT-23,	
....4	Q607	0501-000727	TR-SMALL SIGNAL;BC848C,NPN,310mW,SOT-23,	
....4	R601	2007-000029	R-CHIP;0OHM,5%,1/10W,DA,TP,2012	
....4	R602	2007-000029	R-CHIP;0OHM,5%,1/10W,DA,TP,2012	
....4	R610	2007-000290	R-CHIP;100OHM,5%,1/10W,DA,TP,2012	
....4	R611	2007-000290	R-CHIP;100OHM,5%,1/10W,DA,TP,2012	
....4	R614	2007-000468	R-CHIP;1KOHM,5%,1/10W,DA,TP,2012	
....4	R617	2007-000931	R-CHIP;470OHM,5%,1/10W,DA,TP,2012	
....4	R618	2007-000931	R-CHIP;470OHM,5%,1/10W,DA,TP,2012	
....4	R619	2007-000290	R-CHIP;100OHM,5%,1/10W,DA,TP,2012	
....4	R620	2007-000290	R-CHIP;100OHM,5%,1/10W,DA,TP,2012	
....4	R621	2007-000290	R-CHIP;100OHM,5%,1/10W,DA,TP,2012	
....4	R622	2007-000290	R-CHIP;100OHM,5%,1/10W,DA,TP,2012	
....4	R623	2007-000477	R-CHIP;1MOHM,5%,1/10W,DA,TP,2012	
....4	R624	2007-000477	R-CHIP;1MOHM,5%,1/10W,DA,TP,2012	
....4	R625	2007-000477	R-CHIP;1MOHM,5%,1/10W,DA,TP,2012	
....4	R626	2007-000477	R-CHIP;1MOHM,5%,1/10W,DA,TP,2012	
....4	R632	2007-000931	R-CHIP;470OHM,5%,1/10W,DA,TP,2012	
....4	R633	2007-000931	R-CHIP;470OHM,5%,1/10W,DA,TP,2012	
....4	R634	2007-000931	R-CHIP;470OHM,5%,1/10W,DA,TP,2012	
....4	R635	2007-000931	R-CHIP;470OHM,5%,1/10W,DA,TP,2012	
....4	R636	2007-000931	R-CHIP;470OHM,5%,1/10W,DA,TP,2012	
....4	R637	2007-000931	R-CHIP;470OHM,5%,1/10W,DA,TP,2012	
....4	R638	2007-000931	R-CHIP;470OHM,5%,1/10W,DA,TP,2012	
....4	R660	2007-000872	R-CHIP;4.7KOHM,5%,1/10W,DA,TP,2012	
....4	R661	2007-000872	R-CHIP;4.7KOHM,5%,1/10W,DA,TP,2012	
....4	R664	2007-001177	R-CHIP;8.2KOHM,5%,1/10W,DA,TP,2012	
....4	R665	2007-000774	R-CHIP;33KOHM,5%,1/10W,DA,TP,2012	
....4	R666	2007-000872	R-CHIP;4.7KOHM,5%,1/10W,DA,TP,2012	
....4	R669	2007-001177	R-CHIP;8.2KOHM,5%,1/10W,DA,TP,2012	
....4	R670	2007-000774	R-CHIP;33KOHM,5%,1/10W,DA,TP,2012	
....4	R672	2007-000586	R-CHIP;22KOHM,5%,1/10W,DA,TP,2012	
....4	R673	2007-000586	R-CHIP;22KOHM,5%,1/10W,DA,TP,2012	
....4	R674	2007-000300	R-CHIP;10KOHM,5%,1/10W,DA,TP,2012	
....4	R675	2007-000300	R-CHIP;10KOHM,5%,1/10W,DA,TP,2012	
....4	RB1	2007-000941	R-CHIP;47KOHM,5%,1/10W,DA,TP,2012	
....4	RB2	2007-000941	R-CHIP;47KOHM,5%,1/10W,DA,TP,2012	
....4	RB3	2007-000328	R-CHIP;11KOHM,5%,1/10W,DA,TP,2012	
....4	RB4	2007-000328	R-CHIP;11KOHM,5%,1/10W,DA,TP,2012	
....4	RD601	2007-000468	R-CHIP;1KOHM,5%,1/10W,DA,TP,2012	
....4	RD602	2007-000872	R-CHIP;4.7KOHM,5%,1/10W,DA,TP,2012	
....4	RD604	2007-001177	R-CHIP;8.2KOHM,5%,1/10W,DA,TP,2012	
....4	RD605	2007-000774	R-CHIP;33KOHM,5%,1/10W,DA,TP,2012	
....4	RD610	2007-001177	R-CHIP;8.2KOHM,5%,1/10W,DA,TP,2012	
....4	RD611	2007-000774	R-CHIP;33KOHM,5%,1/10W,DA,TP,2012	
....4	RD627	2007-000872	R-CHIP;4.7KOHM,5%,1/10W,DA,TP,2012	
....4	RDB1	2007-000941	R-CHIP;47KOHM,5%,1/10W,DA,TP,2012	
....4	RDB2	2007-000941	R-CHIP;47KOHM,5%,1/10W,DA,TP,2012	
....4	RDB3	2007-000328	R-CHIP;11KOHM,5%,1/10W,DA,TP,2012	
....4	RDB4	2007-000328	R-CHIP;11KOHM,5%,1/10W,DA,TP,2012	
....4	X601	2801-000186	CRYSTAL-UNIT;18.432MHz,25ppm,28-AAM,8pF,	
...3		AA63-40273A	SHIELD-CASE;-,SPTE,T0.5,-,CX724AHD	
...3		0202-000187	SOLDER-WIRE FLUX;-,RS60S,D1.2,63Sn/37Pb	S.N.A
..2		0202-000187	SOLDER-WIRE FLUX;-,RS60S,D1.2,63Sn/37Pb	S.N.A
..2		AA65-30104B	CLAMP-WIRE;NYLON 66,V2,BLK,W2 Z5,ALL MOD	S.N.A
..2		AA65-30013A	CLAMP-WIRE;NYLON-66,V0,NTR,DAWH-45N,-,-	S.N.A
..2		AA59-40003P	MODULE-FOCUS,PACK;-,F300,NTSC,43,64x62,	
..2		3301-001201	CORE-FERRITE;AE,230.5x10.25x36mm,1500,28	
..2		AA39-20577A	LEAD CONNECTOR-ASSY;-,-,-,6(3)P,-,-,-,YF	
..2		AA39-20010C	LEAD CONNECTOR-ASSY;-,YFH800-01,S,1P,600	
..2		AA65-30105A	CLAMP-WIRE;NYLON 66,V2,NTR,15MM,ALL MODE	S.N.A
..2		AA95-00007A	ASSY-F/CONVERTER;-,SVP-434JM,KPT51A,NTSC	
...3	CON01	3711-002709	CONNECTOR-HEADER;NOWALL,12P,1R,2.5MM,ANG	
...3	CON02	3711-002703	CONNECTOR-HEADER;NOWALL,5P,1R,2.5mm,ANGL	
⚠ ...3	IC03	AA13-30021E	IC-MCU;Z90234-R3911,SZM-374FC,ST,24K,	
⚠ ...3	IC04	1103-001208	IC-EEPROM;AT24C02-PC27 C,256x8Bit,DIP,8P	
...3	S/CASE	AA63-40037A	SHIELD-CASE;-,SPTE,T0.5,SCT12A,-	S.N.A
...3	XTR01	2804-001213	OSCILLATOR-CLOCK;80MHz,100ppm,10TTL & CM	
...3		AA99-20043V	ASSY-PCB SUB,AUTO; AA95-00007A ,V	S.N.A
....4	CF10	2203-000260	C-CERAMIC,CHIP;10nF,10%,50V,X7R,TP,2012	
....4	CF11	2401-001840	C-AL;100uF,20%,16V,GP,TP,6.3x11,5	
....4	CF12	2203-000218	C-CERAMIC,CHIP;100nF,20%,50V,Y5V,TP,2012	
....4	CF13	2401-001513	C-AL;47uF,20%,16V,WT,TP,5x11,5	
....4	CF14	2203-000218	C-CERAMIC,CHIP;100nF,20%,50V,Y5V,TP,2012	
....4	CF15	2203-000429	C-CERAMIC,CHIP;0.018nF,5%,50V,NP0,TP,201	
....4	CF16	2203-000634	C-CERAMIC,CHIP;0.022nF,5%,50V,NP0,TP,201	

Level	Loc. No.	Code No.	Description ; Specification	Remark
....4	CF17	2203-000429	C-CERAMIC,CHIP;0.018nF,5%,50V,NP0,TP,201	
....4	CF18	2203-000683	C-CERAMIC,CHIP;0.027nF,5%,50V,NP0,TP,201	
....4	CF19	2203-000218	C-CERAMIC,CHIP;100nF,20%,50V,Y5V,TP,2012	
....4	CF21	2203-000218	C-CERAMIC,CHIP;100nF,20%,50V,Y5V,TP,2012	
....4	CF22	2203-000218	C-CERAMIC,CHIP;100nF,20%,50V,Y5V,TP,2012	
....4	CF23	2401-001513	C-AL;47uF,20%,16V,WT,TP,5x11,5	
....4	CF24	2203-000218	C-CERAMIC,CHIP;100nF,20%,50V,Y5V,TP,2012	
....4	CF25	2203-000218	C-CERAMIC,CHIP;100nF,20%,50V,Y5V,TP,2012	
....4	CF26	2203-000218	C-CERAMIC,CHIP;100nF,20%,50V,Y5V,TP,2012	
....4	CF27	2203-000218	C-CERAMIC,CHIP;100nF,20%,50V,Y5V,TP,2012	
....4	CF28	2401-001513	C-AL;47uF,20%,16V,WT,TP,5x11,5	
....4	CF29	2401-001513	C-AL;47uF,20%,16V,WT,TP,5x11,5	
....4	CF30	2203-000218	C-CERAMIC,CHIP;100nF,20%,50V,Y5V,TP,2012	
....4	CF31	2203-000218	C-CERAMIC,CHIP;100nF,20%,50V,Y5V,TP,2012	
....4	CF32	2203-000218	C-CERAMIC,CHIP;100nF,20%,50V,Y5V,TP,2012	
....4	CF33	2203-000218	C-CERAMIC,CHIP;100nF,20%,50V,Y5V,TP,2012	
....4	CF34	2203-000218	C-CERAMIC,CHIP;100nF,20%,50V,Y5V,TP,2012	
....4	CF35	2203-000218	C-CERAMIC,CHIP;100nF,20%,50V,Y5V,TP,2012	
....4	CF37	2203-000218	C-CERAMIC,CHIP;100nF,20%,50V,Y5V,TP,2012	
....4	CF38	2401-001513	C-AL;47uF,20%,16V,WT,TP,5x11,5	
....4	CF39	2203-000218	C-CERAMIC,CHIP;100nF,20%,50V,Y5V,TP,2012	
....4	CF40	2203-000218	C-CERAMIC,CHIP;100nF,20%,50V,Y5V,TP,2012	
....4	CF41	2203-000218	C-CERAMIC,CHIP;100nF,20%,50V,Y5V,TP,2012	
....4	CF42	2203-000218	C-CERAMIC,CHIP;100nF,20%,50V,Y5V,TP,2012	
....4	CF44	2404-000151	C-TA,CHIP;1uF,20%,16V,-,TP,3216,-	
....4	CF45	2203-001158	C-CERAMIC,CHIP;0.068nF,5%,50V,NP0,TP,201	
....4	CF46	2404-000151	C-TA,CHIP;1uF,20%,16V,-,TP,3216,-	
....4	CF47	2203-001158	C-CERAMIC,CHIP;0.068nF,5%,50V,NP0,TP,201	
....4	CF48	2404-000151	C-TA,CHIP;1uF,20%,16V,-,TP,3216,-	
....4	CF49	2203-001158	C-CERAMIC,CHIP;0.068nF,5%,50V,NP0,TP,201	
....4	CF50	2203-000218	C-CERAMIC,CHIP;100nF,20%,50V,Y5V,TP,2012	
....4	CF51	2203-000218	C-CERAMIC,CHIP;100nF,20%,50V,Y5V,TP,2012	
....4	CF52	2203-000316	C-CERAMIC,CHIP;0.12nF,5%,50V,NP0,TP,2012	
....4	CF53	2203-000316	C-CERAMIC,CHIP;0.12nF,5%,50V,NP0,TP,2012	
....4	CF54	2404-001229	C-TA,CHIP;4.7uF,20%,25V,GP,TP,3528	
....4	CF55	2203-000218	C-CERAMIC,CHIP;100nF,20%,50V,Y5V,TP,2012	
....4	CF56	2203-000260	C-CERAMIC,CHIP;10nF,10%,50V,X7R,TP,2012	
....4	CF57	2404-001229	C-TA,CHIP;4.7uF,20%,25V,GP,TP,3528	
....4	CF58	2203-000218	C-CERAMIC,CHIP;100nF,20%,50V,Y5V,TP,2012	
....4	CF60	2401-001840	C-AL;100uF,20%,16V,GP,TP,6.3x11,5	
....4	CF61	2203-000218	C-CERAMIC,CHIP;100nF,20%,50V,Y5V,TP,2012	
....4	CF62	2401-001513	C-AL;47uF,20%,16V,WT,TP,5x11,5	
....4	CF63	2203-000218	C-CERAMIC,CHIP;100nF,20%,50V,Y5V,TP,2012	
....4	CF64	2203-000218	C-CERAMIC,CHIP;100nF,20%,50V,Y5V,TP,2012	
....4	CF65	2203-000218	C-CERAMIC,CHIP;100nF,20%,50V,Y5V,TP,2012	
....4	CF66	2401-001513	C-AL;47uF,20%,16V,WT,TP,5x11,5	
....4	CF67	2203-000218	C-CERAMIC,CHIP;100nF,20%,50V,Y5V,TP,2012	
....4	CF68	2203-000218	C-CERAMIC,CHIP;100nF,20%,50V,Y5V,TP,2012	
....4	CF69	2203-000218	C-CERAMIC,CHIP;100nF,20%,50V,Y5V,TP,2012	
....4	CF70	2203-000218	C-CERAMIC,CHIP;100nF,20%,50V,Y5V,TP,2012	
....4	CF71	2203-000218	C-CERAMIC,CHIP;100nF,20%,50V,Y5V,TP,2012	
....4	CF72	2203-000218	C-CERAMIC,CHIP;100nF,20%,50V,Y5V,TP,2012	
....4	CF75	2401-001840	C-AL;100uF,20%,16V,GP,TP,6.3x11,5	
....4	CF76	2203-000218	C-CERAMIC,CHIP;100nF,20%,50V,Y5V,TP,2012	
....4	CF77	2203-000429	C-CERAMIC,CHIP;0.018nF,5%,50V,NP0,TP,201	
....4	CF78	2203-000429	C-CERAMIC,CHIP;0.018nF,5%,50V,NP0,TP,201	
....4	CF79	2401-000027	C-AL;4.7uF,20%,50V,GP,TP,5x11,5	
....4	CF80	2203-000218	C-CERAMIC,CHIP;100nF,20%,50V,Y5V,TP,2012	
....4	CF81	2203-000218	C-CERAMIC,CHIP;100nF,20%,50V,Y5V,TP,2012	
....4	CF84	2203-000858	C-CERAMIC,CHIP;0.039nF,5%,50V,NP0,TP,201	
....4	CF85	2203-000839	C-CERAMIC,CHIP;0.39nF,5%,50V,NP0,TP,2012	
....4	CF86	2203-000858	C-CERAMIC,CHIP;0.039nF,5%,50V,NP0,TP,201	
....4	CF87	2203-000839	C-CERAMIC,CHIP;0.39nF,5%,50V,NP0,TP,2012	
....4	CF88	2203-000858	C-CERAMIC,CHIP;0.039nF,5%,50V,NP0,TP,201	
....4	CF89	2203-000839	C-CERAMIC,CHIP;0.39nF,5%,50V,NP0,TP,2012	
....4	DF01	0401-000008	DIODE-SWITCHING;DAN217,80V,100mA,SOT-23,	
....4	DF02	0401-000008	DIODE-SWITCHING;DAN217,80V,100mA,SOT-23,	
....4	DF03	0401-000008	DIODE-SWITCHING;DAN217,80V,100mA,SOT-23,	
....4	FF13	2901-000226	FILTER-EMI SMD;25V,0.3A,-,100pF,3.2x1.25	
....4	FF14	2901-000226	FILTER-EMI SMD;25V,0.3A,-,100pF,3.2x1.25	
....4	FF15	2901-000233	FILTER-EMI SMD;50V,0.3A,-,330pF,4.5x3.2x	
....4	FF16	2901-000233	FILTER-EMI SMD;50V,0.3A,-,330pF,4.5x3.2x	
....4	FF17	2901-000233	FILTER-EMI SMD;50V,0.3A,-,330pF,4.5x3.2x	
⚠ 4	IC01	1204-001406	IC-VIDEO PROCESS;FS310KBC,QFP,128P,1100M	
⚠ 4	IC02	1105-001270	IC-DRAM;72V161621,2x524Kx16BITBit,TSOP	
⚠ 4	IC05	1203-001419	IC-VOLTAGE REGULATOR;4931,TO-252,3P,6.6x	
....4	LF10	2901-000297	FILTER-EMI ON BOARD;-,3A,-,-,3.5x5,TP,-	

Level	Loc. No.	Code No.	Description ; Specification	Remark
....4	LF11	2701-000116	INDUCTOR-AXIAL;10uH,10%,4.2x9.8mm	
....4	LF12	2701-000115	INDUCTOR-AXIAL;10uH,10%,3x7mm	
....4	LF13	2701-000115	INDUCTOR-AXIAL;10uH,10%,3x7mm	
....4	LF14	2701-000115	INDUCTOR-AXIAL;10uH,10%,3x7mm	
....4	LF15	2701-000115	INDUCTOR-AXIAL;10uH,10%,3x7mm	
....4	LF16	2701-000149	INDUCTOR-AXIAL;2.7uH,10%,2.5x3.4mm	
....4	LF17	2701-000149	INDUCTOR-AXIAL;2.7uH,10%,2.5x3.4mm	
....4	LF18	2701-000149	INDUCTOR-AXIAL;2.7uH,10%,2.5x3.4mm	
....4	PCB	AA41-10997B	PCB-FORMAT CONNERTER;KPM51A,4L,FR-4,245X	S.N.A
....4	RF11	2007-000290	R-CHIP;100OHM,5%,1/10W,DA,TP,2012	
....4	RF13	2007-000290	R-CHIP;100OHM,5%,1/10W,DA,TP,2012	
....4	RF15	2007-000290	R-CHIP;100OHM,5%,1/10W,DA,TP,2012	
....4	RF16	2007-000477	R-CHIP;1MOHM,5%,1/10W,DA,TP,2012	
....4	RF17	2007-000477	R-CHIP;1MOHM,5%,1/10W,DA,TP,2012	
....4	RF18	2007-000872	R-CHIP;4.7KOHM,5%,1/10W,DA,TP,2012	
....4	RF19	2007-000872	R-CHIP;4.7KOHM,5%,1/10W,DA,TP,2012	
....4	RF21	2007-000642	R-CHIP;270OHM,5%,1/10W,DA,TP,2012	
....4	RF22	2007-001118	R-CHIP;680OHM,5%,1/10W,DA,TP,2012	
....4	RF23	2007-000401	R-CHIP;150OHM,5%,1/10W,DA,TP,2012	
....4	RF24	2007-000401	R-CHIP;150OHM,5%,1/10W,DA,TP,2012	
....4	RF25	2007-000518	R-CHIP;2.7KOHM,5%,1/10W,DA,TP,2012	
....4	RF26	2007-000518	R-CHIP;2.7KOHM,5%,1/10W,DA,TP,2012	
....4	RF27	2007-000290	R-CHIP;100OHM,5%,1/10W,DA,TP,2012	
....4	RF29	2007-000781	R-CHIP;33OHM,5%,1/10W,DA,TP,2012	
....4	RF30	2007-000781	R-CHIP;33OHM,5%,1/10W,DA,TP,2012	
....4	RF31	2007-000781	R-CHIP;33OHM,5%,1/10W,DA,TP,2012	
....4	RF32	2007-000781	R-CHIP;33OHM,5%,1/10W,DA,TP,2012	
....4	RF33	2007-000781	R-CHIP;33OHM,5%,1/10W,DA,TP,2012	
....4	RF34	2007-000781	R-CHIP;33OHM,5%,1/10W,DA,TP,2012	
....4	RF35	2007-000781	R-CHIP;33OHM,5%,1/10W,DA,TP,2012	
....4	RF36	2007-000781	R-CHIP;33OHM,5%,1/10W,DA,TP,2012	
....4	RF37	2007-000781	R-CHIP;33OHM,5%,1/10W,DA,TP,2012	
....4	RF38	2007-000781	R-CHIP;33OHM,5%,1/10W,DA,TP,2012	
....4	RF39	2007-000781	R-CHIP;33OHM,5%,1/10W,DA,TP,2012	
....4	RF40	2007-000781	R-CHIP;33OHM,5%,1/10W,DA,TP,2012	
....4	RF41	2007-000781	R-CHIP;33OHM,5%,1/10W,DA,TP,2012	
....4	RF42	2007-000781	R-CHIP;33OHM,5%,1/10W,DA,TP,2012	
....4	RF43	2007-000781	R-CHIP;33OHM,5%,1/10W,DA,TP,2012	
....4	RF44	2007-000781	R-CHIP;33OHM,5%,1/10W,DA,TP,2012	
....4	RF45	2007-000781	R-CHIP;33OHM,5%,1/10W,DA,TP,2012	
....4	RF46	2007-000781	R-CHIP;33OHM,5%,1/10W,DA,TP,2012	
....4	RF47	2007-000781	R-CHIP;33OHM,5%,1/10W,DA,TP,2012	
....4	RF48	2007-000781	R-CHIP;33OHM,5%,1/10W,DA,TP,2012	
....4	RF49	2007-000781	R-CHIP;33OHM,5%,1/10W,DA,TP,2012	
....4	RF51	2007-000781	R-CHIP;33OHM,5%,1/10W,DA,TP,2012	
....4	RF52	2007-000781	R-CHIP;33OHM,5%,1/10W,DA,TP,2012	
....4	RF53	2007-000781	R-CHIP;33OHM,5%,1/10W,DA,TP,2012	
....4	RF54	2007-000781	R-CHIP;33OHM,5%,1/10W,DA,TP,2012	
....4	RF55	2007-000781	R-CHIP;33OHM,5%,1/10W,DA,TP,2012	
....4	RF56	2007-000781	R-CHIP;33OHM,5%,1/10W,DA,TP,2012	
....4	RF57	2007-000781	R-CHIP;33OHM,5%,1/10W,DA,TP,2012	
....4	RF58	2007-000781	R-CHIP;33OHM,5%,1/10W,DA,TP,2012	
....4	RF59	2007-000781	R-CHIP;33OHM,5%,1/10W,DA,TP,2012	
....4	RF60	2007-000781	R-CHIP;33OHM,5%,1/10W,DA,TP,2012	
....4	RF61	2007-000781	R-CHIP;33OHM,5%,1/10W,DA,TP,2012	
....4	RF62	2007-000781	R-CHIP;33OHM,5%,1/10W,DA,TP,2012	
....4	RF64	2007-000290	R-CHIP;100OHM,5%,1/10W,DA,TP,2012	
....4	RF66	2007-000781	R-CHIP;33OHM,5%,1/10W,DA,TP,2012	
....4	RF67	2007-000781	R-CHIP;33OHM,5%,1/10W,DA,TP,2012	
....4	RF68	2007-000290	R-CHIP;100OHM,5%,1/10W,DA,TP,2012	
....4	RF70	2007-000468	R-CHIP;1KOHM,5%,1/10W,DA,TP,2012	
....4	RF71	2007-000468	R-CHIP;1KOHM,5%,1/10W,DA,TP,2012	
....4	RF72	2007-000468	R-CHIP;1KOHM,5%,1/10W,DA,TP,2012	
....4	RF73	2007-000468	R-CHIP;1KOHM,5%,1/10W,DA,TP,2012	
....4	RF74	2007-000468	R-CHIP;1KOHM,5%,1/10W,DA,TP,2012	
....4	RF75	2007-000468	R-CHIP;1KOHM,5%,1/10W,DA,TP,2012	
....4	RF76	2007-000468	R-CHIP;1KOHM,5%,1/10W,DA,TP,2012	
....4	RF78	2007-000468	R-CHIP;1KOHM,5%,1/10W,DA,TP,2012	
....4	RF79	2007-000468	R-CHIP;1KOHM,5%,1/10W,DA,TP,2012	
....4	RF80	2007-000468	R-CHIP;1KOHM,5%,1/10W,DA,TP,2012	
....4	RF81	2007-000872	R-CHIP;4.7KOHM,5%,1/10W,DA,TP,2012	
....4	RF82	2007-000290	R-CHIP;100OHM,5%,1/10W,DA,TP,2012	
....4	RF83	2007-000468	R-CHIP;1KOHM,5%,1/10W,DA,TP,2012	
....4	RF84	2007-000872	R-CHIP;4.7KOHM,5%,1/10W,DA,TP,2012	
....4	RF85	2007-000872	R-CHIP;4.7KOHM,5%,1/10W,DA,TP,2012	
....4	RF86	2007-001166	R-CHIP;75OHM,5%,1/10W,DA,TP,2012	
....4	RF87	2007-001166	R-CHIP;75OHM,5%,1/10W,DA,TP,2012	
....4	RF88	2007-001166	R-CHIP;75OHM,5%,1/10W,DA,TP,2012	
....4	XTR02	2801-000152	CRYSTAL-UNIT;14.31818MHz,40ppm,28-AAM,16	
....4	XTR04	2801-000724	CRYSTAL-UNIT;6MHz,50ppm,28-AAM,20pF,40oh	
..2		AA65-30109A	CLAMP-FBT;NYLON-66,V2,BLK,-,-,-	S.N.A

ASSY-CABINET,MID

1	*	AA91-00430B	ASSY-CABINET,MID;-,WOOD,KBM21-58 DO,53J5	
..2	BF+CM	AA60-10051A	SCREW-WOOD;PH,+,M4,L16,ZPC(BLK),SWRCH18A	S.N.A
..2	CABMID	AA63-00105E	SPACER-FELT;FELT,T2.0,BLK,32*1160,PCJ533	S.N.A
..2	CABMID	AA63-00105F	SPACER-FELT;FELT,T2.0,BLK,32*850,PCJ533,	S.N.A
..2	CABMID	AA66-40010A	ROLLER-PAPER;PAPER,OD50,L80,T3,-,SPT-521	S.N.A
..2	CABMID	AA60-10050X	SCREW-WOOD;FH,+,M3.5,L32,ZPC(YEL),SWRCH1	S.N.A
..2	CAS+CM	6002-000214	SCREW-TAPPING;TH,+,1,M4.0,L16,ZPC(BLK),M	S.N.A
..2	SPK+CM	AA60-10051A	SCREW-WOOD;PH,+,M4,L16,ZPC(BLK),SWRCH18A	S.N.A
..2		AA61-10247A	BRACKET-FOCUS;-,S46DS,SECC,T1.0,-,-,-	S.N.A
..2		AA61-10387A	BRACKET-GRILLE;-,SVP-462J,SECC-1,T0.5,-,	S.N.A
..2		AA61-20136A	HOLDER-MASK,PIN;-,S4388,NYLON,-,BLK,#066	S.N.A
..2		AA63-00066C	SPACER-DUAL,LOCK;#250,-,-,11X20,-,-	S.N.A
..2		AA64-01263B	CABINET MIDDLE;53J5,KMB21-58 DO,WOOD,-,-	
..2		AA64-00468C	CABINET-LEG,B;-,53J5,53J2,SV704P DO ,ABS	
..2		AA63-60126D	SPACER-FELT;FELT,T2,-,400X15,PRJ61,-	S.N.A
..2		AA63-00193B	COVER-AIRVENT;-,533R,-,HIPS,VO,BLK,-,-	S.N.A
..2		AA39-20505U	LEAD CONNECTOR-ASSY;,-,-,4P,-,-,-,YSH250	
..2		AA39-00042A	LEAD CONNECTOR-ASSY;,-,-,-,-,-,-,-,-,-,RE	
..2		3001-001134	SPEAKER;30W,8ohm,93dB,60Hz	
..2		3001-001107	SPEAKER;20W,8ohm,95dB,1300Hz	
..2		AA61-00094B	HOLDER-RAIL;-,PCJ533R,ABS,HB,BLK,240	S.N.A
..2		AA61-00458A	CASTER;-,-,TP4015-05 NYL,OH47,-,-,SR4	S.N.A
..2		AA61-00185E	HOLDER-SCREEN,15T;-,53J2,53J5,ABS,HB,BLK	
..2		AA61-00185D	HOLDER-SCREEN,15T;-,53J2,53J5,ABS,HB,BLK	
..2		AA61-00097A	HOLDER-WIRE;-,-,NYLON 6/6,-,NTR,-	S.N.A
..2		AA61-00094C	HOLDER-RAIL;-,PCJ533R,ABS,HB,BLK,480	S.N.A

ASSY POWER CORD

1	*	AA96-20115F	ASSY POWER CORD;-,AP2/YES,H/C50mm,KJP170	
..2		3811-000401	WIRE-PVC CU;BCWA,300V,ROLL,17/0.16mm,#22	S.N.A
⚠ ..2		AA39-10005N	POWER-CORD;-,KKP-560A,KLCE-2F,2.59,3P,AU	S.N.A
..2		AA61-20284A	HOLDER;-,P-CORD,PP,VO,BLK,KE-002	S.N.A

ASSY-DOOR,BODY

1	*	AA95-00575A	ASSY-DOOR,BODY;-,SP53J5HFX/MVT,J51A,-,-,	
..2	AV+DB	6006-001095	SCREW-ASS'Y TAPT;WP,BH,+,M4,L12,ZPC(YEL)	S.N.A
..2	CP+DB	6002-000512	SCREW-TAPPING;RH,+,2,M4,L12,ZPC(BLK),SWR	S.N.A
..2	PC+BM	6003-001023	SCREW-TAPTITE;RWH,+,B,M3,L10,ZPC(YEL),SW	S.N.A
..2		AA91-00157P	ASSY-DOOR,BODY;-,HB,J51A PAL,SP43J5HF	
...3	KC+DB	6002-000512	SCREW-TAPPING;RH,+,2,M4,L12,ZPC(BLK),SWR	S.N.A
...3	KNOPOW	AA61-60005A	SPRING-CS;-,SUS304,0.6,OD10.7,H10,N4,-,-	
...3	WR+DB	6002-000512	SCREW-TAPPING;RH,+,2,M4,L12,ZPC(BLK),SWR	S.N.A
...3		AA64-00290B	WINDOW-REMOCON;-,PCJ533R,SV-704P,PC,-,VI	S.N.A
...3		AA64-00294B	DOOR-CONTROL;-,PCJ533R,GR-806P,ABS,HB,GR	
...3		AA64-00295H	DOOR-BODY;-,53J5HF,GR-806P P51A PAL,HIPS	
...3		AA64-00289B	INDICATOR-LED;-,PCJ533R,-,ACRYL,-,CLR,-	S.N.A
...3		AA64-00288C	KNOB-POWER;-,43J5,GR806P MASTER,ABS,HB,G	S.N.A
...3		AA64-00287B	KNOB-CHA,VOL;-,PCJ533R,S/METALLIC+UV COA	S.N.A
...3		AA64-00286B	KNOB-CONTROL;-,PCJ533R,GR-806P,ABS,HB,GR	S.N.A
...3		AA61-30001A	LATCH-DOOR;-,-,-,KIFUCO LA701,-	S.N.A
..2		AA95-00262B	ASSY-PCB,CONTROL;-,SP43J5HP3S/XTT,CHINA,	
...3	CNW01	AA39-00120C	LEAD CONNECTOR-ASSY;,-,-,11P,-,-,-,35155	
...3	CNY01	3711-003973	CONNECTOR-HEADER;BOX,11P,1R,2.5mm,STRAIG	
...3	LEDY01	0601-001381	LED;ROUND,RED/GRN,5.0MM,650/563NM	
...3	PCB	AA41-00189A	PCB-CONTROL;J51A,1L,FR-1,330x245x1.6T,4A	S.N.A
...3	RMY01	AA59-60002B	MODULE-REMOCON;-,ORC-50HF,38KHZ,940MM,ME	
...3	SWY03	3404-000176	SWITCH-TACT;12V,50mA,120gf,6x6mm,SPST	
...3	SWY04	3404-000176	SWITCH-TACT;12V,50mA,120gf,6x6mm,SPST	

Level	Loc. No.	Code No.	Description ; Specification	Remark
...3	SWY05	3404-000176	SWITCH-TACT;12V,50mA,120gf,6x6mm,SPST	
...3	SWY06	3404-000176	SWITCH-TACT;12V,50mA,120gf,6x6mm,SPST	
...3	SWY07	3404-000176	SWITCH-TACT;12V,50mA,120gf,6x6mm,SPST	
...3	SWY08	3404-000176	SWITCH-TACT;12V,50mA,120gf,6x6mm,SPST	
...3		AA61-20069A	HOLDER-WIRE;-,-,NYLON-66,V0,NTR,PAWH-5NA	S.N.A
...3		0202-000187	SOLDER-WIRE FLUX;-,RS60S,D1.2,63Sn/37Pb	S.N.A
...3		3301-001201	CORE-FERRITE;AE,230.5x10.25x36mm,1500,28	
...3		AA63-10002B	BAND-TIE;-,NYLON66 V2,-,-,L140,NTR,-,-	S.N.A
...3		AA99-20061Y	ASSY-PCB SUB,AUTO; AA95-00262B ,V	S.N.A
....4	CY01	2401-001496	C-AL;47uF,20%,16V,GP,TP,5x7,5	
....4	QY01	0504-000123	TR-DIGITAL;KSR1010,NPN,300mW,10K,TO-92,T	
....4	QY02	0504-000123	TR-DIGITAL;KSR1010,NPN,300mW,10K,TO-92,T	
....4	RY01	2001-000109	R-CARBON(S);470OHM,5%,1/2W,AA,TP,2.4X6.4	
....4	RY02	2001-000924	R-CARBON;680OHM,5%,1/8W,AA,TP,1.8X3.2MM	
....4	RY03	2001-000429	R-CARBON;1KOHM,5%,1/8W,AA,TP,1.8X3.2MM	
....4	RY04	2001-000449	R-CARBON;2.2KOHM,5%,1/8W,AA,TP,1.8X3.2M	
....4	RY05	2001-000924	R-CARBON;680OHM,5%,1/8W,AA,TP,1.8X3.2MM	
....4	RY06	2001-000429	R-CARBON;1KOHM,5%,1/8W,AA,TP,1.8X3.2MM	
....4	RY07	2001-000020	R-CARBON(S);22OHM,5%,1/2W,AA,TP,2.4X6.4M	
....4	RY08	2001-001108	R-CARBON(S);22KOHM,5%,1/2W,AA,TP,2.4X6.4	
....4	RY09	2001-000109	R-CARBON(S);470OHM,5%,1/2W,AA,TP,2.4X6.4	
..2		AA95-00098D	ASSY-PCB,POWER S/W;-,SP43J5HP3S/XTT,J51A	
...3	CNP01	AA39-20176G	LEAD CONNECTOR-ASSY;,-,-,3(2)P;-,-,-,YFH	
...3	CNP02	AA39-20176G	LEAD CONNECTOR-ASSY;,-,-,3(2)P;-,-,-,YFH	
...3	PCB	AA41-00035A	PCB-POWER S/W;J51A,1L,CEM-1,245x245x1.6T	S.N.A
...3	SWP01	3403-000179	SWITCH-PUSH;250V,5A,DPST,-,JPW-2104B	
...3		AA63-10002B	BAND-TIE;-,NYLON66 V2,-,-,L140,NTR,-,-	S.N.A
...3		AA99-20067C	ASSY-PCB SUB,AUTO; AA95-00098D ,V	S.N.A
...3		AA61-00110B	BRACKET-MASTER;-,PCJ533R,SECC-1,T1.0,NTR	S.N.A
...3		0202-000187	SOLDER-WIRE FLUX;-,RS60S,D1.2,63Sn/37Pb	S.N.A
...3		6003-000334	SCREW-TAPTITE;RH,+,2S,M3,L6,ZPC(YEL),SWR	S.N.A
..2		AA95-00046D	ASSY-AV SIDE;-,SP43J5HP3C/XTT,J51A,-,-,-	
...3	CNW02	AA39-20032J	LEAD CONNECTOR-ASSY;-,67096-12,S,12P,130	
...3	CNY02	3711-003641	CONNECTOR-HEADER;BOX,12P,1R,2.5mm,STRAIG	
...3	JK101	3722-001163	JACK-VHS;4P,12mm,AU,BLK,N	
...3	JK102	3722-001031	JACK-RCA;3P,3.6MM,#18,AU	
...3	PCB	AA41-10969B	PCB-A/V SIDE;KPT51A/52A,1L,FR-1,245X245X	S.N.A
...3		AA63-10002A	BAND-TIE;-,NYLON66 V2,-,-,L100,NTR,-,-	S.N.A
...3		AA98-60004J	ASSY-SUB,PART;APT51A,A/V,-,ALL	S.N.A
....4		0202-000187	SOLDER-WIRE FLUX;-,RS60S,D1.2,63Sn/37Pb	S.N.A
...3		AA99-20066X	ASSY-PCB SUB,AUTO; AA95-00046D ,V	S.N.A
....4	CP01	2202-000263	C-CERAMIC,MLC-AXIAL;470pF,10%,50V,Y5P,TP	
....4	CP02	2202-000263	C-CERAMIC,MLC-AXIAL;470pF,10%,50V,Y5P,TP	
....4	CP03	2202-000263	C-CERAMIC,MLC-AXIAL;470pF,10%,50V,Y5P,TP	
....4	CP04	2401-000302	C-AL;100uF,20%,25V,GP,TP,6.3x11,5	
....4	CP05	2401-000302	C-AL;100uF,20%,25V,GP,TP,6.3x11,5	
....4	CP06	2401-000302	C-AL;100uF,20%,25V,GP,TP,6.3x11,5	
....4	CP07	2401-000302	C-AL;100uF,20%,25V,GP,TP,6.3x11,5	
....4	CP08	2401-000302	C-AL;100uF,20%,25V,GP,TP,6.3x11,5	
....4	CP09	2202-000121	C-CERAMIC,MLC-AXIAL;100pF,10%,50V,Y5P,TP	
....4	CP10	2202-000121	C-CERAMIC,MLC-AXIAL;100pF,10%,50V,Y5P,TP	
....4	RP01	2001-000273	R-CARBON;100KOHM,5%,1/8W,AA,TP,1.8X3.2M	
....4	RP02	2001-000969	R-CARBON;75OHM,5%,1/8W,AA,TP,1.8X3.2MM	
....4	RP03	2001-000273	R-CARBON;100KOHM,5%,1/8W,AA,TP,1.8X3.2M	
....4	RP04	2001-000969	R-CARBON;75OHM,5%,1/8W,AA,TP,1.8X3.2MM	
....4	RP05	2001-000969	R-CARBON;75OHM,5%,1/8W,AA,TP,1.8X3.2MM	
...3		3301-001201	CORE-FERRITE;AE,230.5x10.25x36mm,1500,28	

ASSY-PCB,SUB

Level	Loc. No.	Code No.	Description ; Specification	Remark
1	*	AA95-00425B	ASSY-PCB,SUB;-,SP53J5HF,J51A,PAL,-,-	
..2	C430	2301-001219	C-FILM,MPE-PPF;3.9nF,5%,1.6KV,TP,29x8.5x	
..2	C431	2306-000326	C-FILM,MPPF;4.7nF,5%,1.6KV,TP,28.5x16x9m	
..2	C432	2306-000267	C-FILM,MPPF;8.2nF,5%,1.6KV,TP,28.5x18.5x	
..2	C436	2306-000235	C-FILM,MPPF;560nF,5%,400V,TP,26*22.5*14,	
..2	C438	2306-000267	C-FILM,MPPF;8.2nF,5%,1.6KV,TP,28.5x18.5x	
..2	C471	2301-001091	C-FILM,MPPF;470nF,5%,400V,TP,26x21.5x14.	
..2	C473	2306-000322	C-FILM,MPPF;12nF,5%,1.6KV,TP,29x20.5x13,	
..2	C474	2306-000326	C-FILM,MPPF;4.7nF,5%,1.6KV,TP,28.5x16x9m	
..2	C477	2301-000213	C-FILM,PEF;220nF,5%,250V,TP,21.5x11,7.5	
..2	C801	2306-000321	C-FILM,MPPF;470NF,5%,275V,TP,-,22.5	
..2	C802	2306-000321	C-FILM,MPPF;470NF,5%,275V,TP,-,22.5	
..2	C812	2401-003465	C-AL;680UF,20%,450V,GP,BK,35X60MM,2	
..2	C831	2306-000323	C-FILM,MPPF;2.2nF,5%,1.6KV,TP,28.5x15.5x	
..2	C862	2401-002225	C-AL;3300uF,20%,50V,WT,BK,22x41,7.5	
..2	C865	2401-000737	C-AL;2200uF,20%,50V,GP,TP,18x35.5,7	
..2	C868	2401-000737	C-AL;2200uF,20%,50V,GP,TP,18x35.5,7	
..2	C875	2401-002251	C-AL;470uF,20%,200V,GP,BK,25x40mm,1	
..2	C876	2401-000787	C-AL;220uF,20%,160V,GP,TP,16x31.5mm	
..2	C891	2201-000987	C-CERAMIC,DISC;2.2nF,20%,400V,Y5U,TP,12.	
..2	C892	2201-000987	C-CERAMIC,DISC;2.2nF,20%,400V,Y5U,TP,12.	
..2	CN201	AA39-00128A	LEAD CONNECTOR-ASSY;,-,-,8P;-,-,-,YBNH25	
..2	CN202	AA39-00115A	LEAD CONNECTOR-ASSY;,-,-,10P;-,-,-,YBNH2	
..2	CN203	3711-003052	CONNECTOR-HEADER;BOX,10P,1R,2.5mm,STRAGH	
..2	CN401	3711-003051	CONNECTOR-HEADER;BOX,8P,1R,2.5mm,STRAGHT	
..2	CN402	3711-003974	CONNECTOR-HEADER;BOX,12P,1R,2.5mm,STRAIG	
..2	CN801	AA39-00116A	LEAD CONNECTOR-ASSY;,-,-,12P;-,-,-,YBNH2	
..2	CN802	3711-003051	CONNECTOR-HEADER;BOX,8P,1R,2.5mm,STRAGHT	
..2	CNW406	AA39-00009A	LEAD CONNECTOR-ASSY;-,YFH800-03,S,3(2)P,	
..2	CNW809	AA39-20061G	LEAD CONNECTOR-ASSY;-,YFH800-03,S,3P,100	
⚠ ..2	D464	0402-000236	DIODE-RECTIFIER;GI824,400V,5A,-,TP	
⚠ ..2	D804	AA96-50310A	ASSY-H/S;-,POWER,AA62-30150C,RBV606,-	
...3		AA62-30150C	HEAT SINK-ES;-,A6063 EXTR,-,WHT,40(24.5)	S.N.A
...3		AA60-30003A	WASHER;-,-,-,T1.5,-,SBHG-1,-	S.N.A
...3		6003-000333	SCREW-TAPTITE;RH,+,2S,M3,L10,ZPC(YEL),SW	S.N.A
...3		0402-000549	DIODE-BRIDGE;RBV606,600V,6A,-,BK	
...3		0205-000129	GREASE-SILICON;SC102,JAPAN	S.N.A
⚠ ..2	D810	0402-000250	DIODE-RECTIFIER;RG4C,1000V,1A,-	
⚠ ..2	D854	AA96-00111C	ASSY-H/S;-,-,AA62-30013L,FML-G12S,-	
...3		0402-000233	DIODE-RECTIFIER;FML-G12S,200V,5A,-,-	
...3		6003-000333	SCREW-TAPTITE;RH,+,2S,M3,L10,ZPC(YEL),SW	S.N.A
...3		AA62-30013L	HEATSINK-ES;-,-,-,-,44/22,-,WHT,-,-,-,-	S.N.A
⚠ ..2	D871	AA96-00032A	ASSY-H/S;-,-,AA62-30173B,FMLG12, FMGG26	
...3		0402-000233	DIODE-RECTIFIER;FML-G12S,200V,5A,-,-	
...3		0402-000231	DIODE-RECTIFIER;FMG-G26S,600V,4A,TO-220F	
...3		AA62-30173B	HEAT-SINK,ES;-,-,T1.0,WHT,-,ALL,-,-,88X2	S.N.A
...3		6003-000333	SCREW-TAPTITE;RH,+,2S,M3,L10,ZPC(YEL),SW	S.N.A
...3		0205-000129	GREASE-SILICON;SC102,JAPAN	S.N.A
⚠ ..2	DZ481	0403-001327	DIODE-ZENER;MTZJ18A,16.22-17.06V,500mW,D	
⚠ ..2	F801	3601-001007	FUSE-CARTRIDGE;250V,6.3A,TIME-LAG,GLASS,	
⚠ ..2	F802	3601-001137	FUSE-AXIAL LEAD;250V,6A,SLOW-BLOW,GLASS,	
⚠ ..2	F804	3601-001007	FUSE-CARTRIDGE;250V,6.3A,TIME-LAG,GLASS,	
⚠ ..2	IC301	AA96-50381A	ASSY-H/S;-,-,AA62-30180B,LA7845,-	
...3		0205-000129	GREASE-SILICON;SC102,JAPAN	S.N.A
...3		1204-000517	IC-VERTIVAL DEF.;LA7845,SIP,7P,-,PLASTIC	
...3		6003-000333	SCREW-TAPTITE;RH,+,2S,M3,L10,ZPC(YEL),SW	S.N.A
...3		AA62-30180B	HEAT SINK-ES;-,A6063 EXTR.,2,WHT,70MM,-,	S.N.A
⚠ ..2	IC421	1203-000165	IC-POSI.ADJUST REG.;78R12,TO-220,3P,-,-	
⚠ ..2	IC430	1203-000162	IC-POSI.ADJUST REG.;317,TO-220,3P,-,PLAS	
⚠ ..2	IC431	1201-000191	IC-OP AMP;4558,DIP,8P,300MIL,DUAL,20V/mV	
⚠ ..2	IC801	AA96-00035A	ASSY-H/S;-,POWER,AA62-30181P,STR-F6656,	
...3		0205-000129	GREASE-SILICON;SC102,JAPAN	S.N.A
...3		6003-000333	SCREW-TAPTITE;RH,+,2S,M3,L10,ZPC(YEL),SW	S.N.A
...3		AA13-00018A	IC-HYBRID;-,STR-F6656,LF1351,5PIN,-,-	
...3		AA62-30181P	HEAT-SINK,ES;-,-,T1.0,WHITE,SCREW-HOLE(2	S.N.A
⚠ ..2	IC804	1203-001400	IC-POWER PRESCALER;SE110N,T0-220(SIP),3P	
⚠ ..2	IC806	0604-001032	PHOTO-COUPLER;TR,170-260%,300mW,DIP-4,ST	
..2	L431	AA27-30003M	COIL-LINEARLITY;-,5uH,OWA14x15,USRC0.1x6	
..2	L432	AA27-40001U	COIL-HORIZ.WIDTH;-,220UH,DR1420,PI0.12X1	
..2	L482	2701-001033	INDUCTOR-AXIAL;1uH,10%,5x14mm	
..2	L800	AA29-30002L	FILTER-LINE NOISE;-,10mHMIN,5A,AC90~260V	
..2	L801	AA29-30002F	FILTER-LINE NOISE;-,6mH,2.45A,-,-	
..2	L803	AA29-00008A	FILTER-LINE NOISE;35-6MH 3A,-,6MHMIN,3A,	
..2	L854	AA27-10001C	COIL-CHOKE;-,100uH,K,-,5.0A,ST,700UH-K(R	
..2	L860	AA27-10001C	COIL-CHOKE;-,100uH,K,-,5.0A,ST,700UH-K(R	
..2	L862	AA27-10001C	COIL-CHOKE;-,100uH,K,-,5.0A,ST,700UH-K(R	
..2	L872	AA27-10001C	COIL-CHOKE;-,100uH,K,-,5.0A,ST,700UH-K(R	
..2	L874	AA27-10002L	COIL-CHOKE;-,24UH,K,-,2A,-,24UH-K,10X10M	
..2	PCB	AA41-00197B	PCB-SUB;P51A,1L,CEM-1,330x245x1.6T,1A,	S.N.A
⚠ ..2	Q431	AA96-00033C	ASSY H/S;-,H-OUT,AA62-30173C,2SC5144, F	
...3		AA60-30001A	WASHER-PLATE;M3,ID3.5,15X8.5,T1.0,-,SBHG	S.N.A
...3		AA62-30173C	HEAT SINK-ES;-,-,T1.0,WHITE,SCREW-HOLE(2	S.N.A
...3		6003-000333	SCREW-TAPTITE;RH,+,2S,M3,L10,ZPC(YEL),SW	S.N.A
...3		0502-001121	TR-POWER;2SC5144,NPN,200W,TO-3PL,BK,10-	
...3		0402-001296	DIODE-RECTIFIER;FMP-3FU,1.5KV,5A,TO-3PF,	
...3		0205-000129	GREASE-SILICON;SC102,JAPAN	S.N.A
⚠ ..2	Q433	AA96-50407A	ASSY-H/S;-,-,AA62-30154G,KSD73Y,-	
...3		0205-000129	GREASE-SILICON;SC102,JAPAN	S.N.A
...3		0502-000298	TR-POWER;KSD73,NPN,30W,TO-220,-,120-240	
...3		6003-000333	SCREW-TAPTITE;RH,+,2S,M3,L10,ZPC(YEL),SW	S.N.A
...3		AA62-30154G	HEAT SINK-ES;-,A6063 EXTR,-,WHT,50/16,-,	S.N.A

Level	Loc. No.	Code No.	Description ; Specification	Remark
..2	Q441	AA96-50383F	ASSY-H/S;-,-,AA62-30180D,2SD921,-	
...3		0205-000129	GREASE-SILICON;SC102,JAPAN	S.N.A
...3		0502-001104	TR-POWER;2SD921,NPN,80W,TO-3P,BK,700-	
...3		6003-000333	SCREW-TAPTITE;RH,+,2S,M3,L10,ZPC(YEL),SW	S.N.A
...3		AA62-30180D	HEAT SINK-ES;-,A6063 EXTR.,2,WHT,50mm,-,	S.N.A
..2	Q472	0505-000156	FET-SILICON;IRF620,N,200V,5A,0.8ohm,50W,	S.N.A
..2	Q473	AA96-00037A	ASSY-H/S;-,-,AA62-30181N,2SC4125, IRFS6	
...3		0502-001100	TR-POWER;2SC4125,NPN,70W,TO-3PML,BK,8-	
...3		AA62-30181N	HEAT-SINK,ES;-,-,T1.0,WHITE,SCREW-HOLE(2	S.N.A
...3		AA60-30001A	WASHER-PLATE;M3,ID3.5,15X8.5,T1.0,-,SBHG	S.N.A
...3		6003-000333	SCREW-TAPTITE;RH,+,2S,M3,L10,ZPC(YEL),SW	S.N.A
...3		0505-001202	FET-SILICON;IRFS640A,N,200V,9.8A,0.18ohm	S.N.A
...3		0205-000129	GREASE-SILICON;SC102,JAPAN	S.N.A
..2	R440	2008-001091	R-FUSIBLE(S);0.47OHM,10%,1/2W,AC,BK,2.5X	
..2	R442	2008-000189	R-FUSIBLE;0.47ohm,10%,2W,AA,TP,6x15.5mm	
..2	R445	2008-001091	R-FUSIBLE(S);0.47OHM,10%,1/2W,AC,BK,2.5X	
..2	R803	1404-001195	THERMISTOR-NTC;5.1ohm,15%,2900,27mW/C,BK	
..2	R815	2003-002162	R-METAL OXIDE(S);15KOHM,5%,3W,AG,TP,6X16	
..2	R815A	2003-002162	R-METAL OXIDE(S);15KOHM,5%,3W,AG,TP,6X16	
..2	R817	2009-001096	R-METAL PLATE;0.07ohm,5%,5W,CL,BK,5x14x1	
..2	R841	2008-001096	R-FUSIBLE(S);3.3OHM,5%,1/2W,AC,BK,2.5X6.	
..2	T431	AA26-50001U	TRANS-HORIZ.DRIVE;-,28mH,105uH,4uH,ER28x	
..2	T432	AA26-00053A	TRANS;-,1.2mH,-,-,EER4445,BK,1.2mH,-	
..2	T444	AA26-30005A	TRANS-FLYBACK;-,FWZ-50A001,50,108V	
..2	T461	AA26-50001V	TRANS-HORIZ.DRIVE;-,6.0mH,113uH,4uH,EI19	
..2	T481	AA26-50001W	TRANS-HORIZ.DRIVE;-,830uH,23uH,4uH,EI-30	
..2	T802	AA26-00006A	TRANS-SWITCHING;-,90~260V,110V/34V/+-30V	
..2		0202-000187	SOLDER-WIRE FLUX;-,RS60S,D1.2,63Sn/37Pb	S.N.A
..2		AA65-30110A	CLAMP-WIRE;NYLON 66,V2,BLK,PAL TVI,ALL M	S.N.A
..2		0403-001325	DIODE-ZENER;MTZJ15C,14.35-15.09V,500mW,D	
..2		AA65-30109A	CLAMP-FBT;NYLON-66,V2,BLK,-,-,-	S.N.A
..2		AA62-00010A	HEAT SINK;-,-,T1.0,SILVER,H/SINK & SHIEL	S.N.A
..2		AA99-20069B	ASSY-PCB SUB,AUTO; AA95-00425B ,V	S.N.A
...3	C301	2305-000149	C-FILM,MPEF;100nF,5%,100V,TP,12x12.5x6.5	
...3	C302	2201-000292	C-CERAMIC,DISC;1nF,10%,50V,Y5P,TP,5x3.5,	
...3	C303	2305-000149	C-FILM,MPEF;100nF,5%,100V,TP,12x12.5x6.5	
...3	C304	2201-000292	C-CERAMIC,DISC;1nF,10%,50V,Y5P,TP,5x3.5,	
...3	C305	2201-002022	C-CERAMIC,DISC;0.005nF,0.25pF,500V,NP0,T	
...3	C307	2401-000365	C-AL;100uF,20%,50V,WT,TP,10x12.5mm,	
...3	C308	2401-000365	C-AL;100uF,20%,50V,WT,TP,10x12.5mm,	
...3	C309	2305-000285	C-FILM,MPEF;220NF,5%,100V,TP,10.5X5.5X15	
...3	C311	2305-000149	C-FILM,MPEF;100nF,5%,100V,TP,12x12.5x6.5	
...3	C412	2301-000383	C-FILM,PEF;10nF,5%,50V,TP,6x7x3.2mm,5mm	
...3	C413	2401-000360	C-AL;100uF,20%,50V,GP,TP,8x11.5,5	
...3	C417	2401-001397	C-AL;470uF,20%,25V,GP,TP,10x16,5	
...3	C418	2401-000360	C-AL;100uF,20%,50V,GP,TP,8x11.5,5	
...3	C419	2201-000180	C-CERAMIC,DISC;10nF,10%,50V,Y5V,TP,7x3,5	
...3	C426	2401-000360	C-AL;100uF,20%,50V,GP,TP,8x11.5,5	
...3	C427	2401-002300	C-AL;47uF,20%,50V,GP,TP,6.3x11,5	
...3	C428	2306-000122	C-FILM,MPPF;100nF,5%,50V,TP,7.3x4.0x5.0m	
...3	C437	2401-003114	C-AL;4.7uF,20%,250V,WT,TP,10x16,5	
...3	C441	2401-000262	C-AL;100uF,20%,160V,HR,TP,16x25,7.5	
...3	C445	2401-001622	C-AL;6.8uF,20%,50V,BP,TP,16x25mm,7.	
...3	C450	2401-000262	C-AL;100uF,20%,160V,HR,TP,16x25,7.5	
...3	C451	2401-001160	C-AL;33uF,20%,160V,GP,-,16x35mm,7.5	
...3	C452	2201-000132	C-CERAMIC,DISC;0.1nF,10%,500V,Y5P,TP,6.5	
...3	C453	2401-002288	C-AL;470uF,20%,25V,WT,TP,10x20,5	
...3	C454	2401-001429	C-AL;470uF,20%,50V,GP,TP,13x20,5	
...3	C455	2201-000132	C-CERAMIC,DISC;0.1nF,10%,500V,Y5P,TP,6.5	
...3	C457	2201-000132	C-CERAMIC,DISC;0.1nF,10%,500V,Y5P,TP,6.5	
...3	C458	2401-002288	C-AL;470uF,20%,25V,WT,TP,10x20,5	
...3	C467	2401-000360	C-AL;100uF,20%,50V,GP,TP,8x11.5,5	
...3	C468	2201-000119	C-CERAMIC,DISC;100nF,+80-20%,50V,Y5V,TP,	
...3	C469	2201-000180	C-CERAMIC,DISC;10nF,10%,50V,Y5V,TP,7x3,5	
...3	C472	2401-000262	C-AL;100uF,20%,160V,HR,TP,16x25,7.5	
...3	C476	2401-000647	C-AL;2.2uF,20%,50V,BP,TP,5x11,5	
...3	C478	2301-000020	C-FILM,PEF;27nF,5%,100V,TP,7.3x4x12.5mm,	
...3	C479	2301-000200	C-FILM,PEF;2.2nF,5%,200V,TP,11.0x6.0x9.0	
...3	C483	2401-000660	C-AL;2.2uF,20%,50V,GP,TP,5x11,5	
...3	C484	2201-000132	C-CERAMIC,DISC;0.1nF,10%,500V,Y5P,TP,6.5	
...3	C809	2201-000551	C-CERAMIC,DISC;0.47nF,10%,1kV,Y5P,TP,6.3	
...3	C814	2201-002041	C-CERAMIC,DISC;0.82nF,10%,2kV,Y5P,TP,9x5	
...3	C815	2201-000406	C-CERAMIC,DISC;0.27nF,10%,2kV,Y5P,TP,6.3	
...3	C816	2201-000332	C-CERAMIC,DISC;2.2nF,20%,250V,Y5U,TP,9x4	
...3	C817	2201-000332	C-CERAMIC,DISC;2.2nF,20%,250V,Y5U,TP,9x4	
...3	C818	2301-001216	C-FILM,PPF;47nF,5%,630V,TP,20x14.5x22,7.	
...3	C819	2201-000332	C-CERAMIC,DISC;2.2nF,20%,250V,Y5U,TP,9x4	
...3	C833	2201-000292	C-CERAMIC,DISC;1nF,10%,50V,Y5P,TP,5x3.5,	
...3	C834	2401-003028	C-AL;100uF,20%,25V,WT,TP,6.3x11,5	
...3	C851	2201-000551	C-CERAMIC,DISC;0.47nF,10%,1kV,Y5P,TP,6.3	
...3	C852	2401-000133	C-AL;1000uF,20%,16V,GP,TP,10x20,5	
...3	C854	2201-000551	C-CERAMIC,DISC;0.47nF,10%,1kV,Y5P,TP,6.3	
...3	C855	2401-003141	C-AL;2200uF,20%,25V,WT,TP,13x25,5mm	
...3	C857	2401-000133	C-AL;1000uF,20%,16V,GP,TP,10x20,5	
...3	C861	2201-000551	C-CERAMIC,DISC;0.47nF,10%,1kV,Y5P,TP,6.3	
...3	C864	2201-000551	C-CERAMIC,DISC;0.47nF,10%,1kV,Y5P,TP,6.3	
...3	C866	2401-000192	C-AL;1000uF,20%,50V,GP,TP,16x25,7.5	
...3	C869	2401-000192	C-AL;1000uF,20%,50V,GP,TP,16x25,7.5	
...3	C871	2201-000551	C-CERAMIC,DISC;0.47nF,10%,1kV,Y5P,TP,6.3	
...3	C872	2401-000703	C-AL;2200uF,20%,25V,GP,-,12.5x25mm,	
...3	C873	2401-001998	C-AL;1000uF,20%,25V,GP,TP,10x20,5mm	
...3	C874	2201-000551	C-CERAMIC,DISC;0.47nF,10%,1kV,Y5P,TP,6.3	
...3	C877	2305-000427	C-FILM,MPEF;47nF,5%,100V,TP,7.5x12.5x3.5	
...3	D302	0402-000546	DIODE-RECTIFIER;TVR10G,400V,1.0A,DO-41,T	
...3	D433	0402-000537	DIODE-RECTIFIER;RH1A,600V,0.6A,DO-204AC	
...3	D435	0402-000132	DIODE-RECTIFIER;1N4004,400V,1A,DO-41,TP	
...3	D436	0401-000005	DIODE-SWITCHING;1N4148,100V,200MA,DO-35,	
...3	D438	0402-000546	DIODE-RECTIFIER;TVR10G,400V,1.0A,DO-41,T	
...3	D440	0402-000534	DIODE-RECTIFIER;RG10V,400V,1.2A,DO-201,T	
...3	D441	0402-000534	DIODE-RECTIFIER;RG10V,400V,1.2A,DO-201,T	
...3	D444	0402-000546	DIODE-RECTIFIER;TVR10G,400V,1.0A,DO-41,T	
...3	D445	0402-000534	DIODE-RECTIFIER;RG10V,400V,1.2A,DO-201,T	
...3	D472	0402-000546	DIODE-RECTIFIER;TVR10G,400V,1.0A,DO-41,T	
...3	D474	0402-000546	DIODE-RECTIFIER;TVR10G,400V,1.0A,DO-41,T	
...3	D801	1405-000187	VARISTOR;750V,1250A,12.5x7mm,TP	
...3	D802	1405-000187	VARISTOR;750V,1250A,12.5x7mm,TP	
...3	D834	0402-000546	DIODE-RECTIFIER;TVR10G,400V,1.0A,DO-41,T	
...3	D843	0402-000546	DIODE-RECTIFIER;TVR10G,400V,1.0A,DO-41,T	
...3	D851	0402-000493	DIODE-RECTIFIER;1R5GU41,400V,1.5A,DO-15L	
...3	DZ301	0403-001328	DIODE-ZENER;MTZJ22A,20.15-21.20V,500mW,D	
...3	DZ304	0403-001327	DIODE-ZENER;MTZJ18A,16.22-17.06V,500mW,D	
...3	DZ305	0403-001329	DIODE-ZENER;MTZJ24B,22.61-23.77V,500mW,D	
...3	DZ306	0403-001167	DIODE-ZENER;MTZJ30D,30V,29.02-30.51V,500	
...3	DZ307	0403-001329	DIODE-ZENER;MTZJ24B,22.61-23.77V,500mW,D	
...3	DZ413	0403-001319	DIODE-ZENER;MTZJ4.7C,4.68-4.93V,500mW,DO	
...3	DZ473	0403-000720	DIODE-ZENER;MTZJ9.1B,9.1V,8.57-9.01V,500	
...3	DZ842	0403-000700	DIODE-ZENER;TZP33A,33V,31-35V,1W,DO-41,T	
...3	DZ858	0403-001325	DIODE-ZENER;MTZJ15C,14.35-15.09V,500mW,D	
...3	F801A	3602-000114	FUSE-HOLDER;-,-,30mohm	S.N.A
...3	F801B	3602-000114	FUSE-HOLDER;-,-,30mohm	S.N.A
...3	F804A	3602-000114	FUSE-HOLDER;-,-,30mohm	S.N.A
...3	F804B	3602-000114	FUSE-HOLDER;-,-,30mohm	S.N.A
...3	F805	3601-001086	FUSE-AXIAL LEAD;125V,5A,FAST-ACTING,GLAS	
...3	F806	3601-001065	FUSE-AXIAL LEAD;125V,3.5A,FAST-ACTING,CE	
...3	F854	3601-001086	FUSE-AXIAL LEAD;125V,5A,FAST-ACTING,GLAS	
...3	F855	3601-001086	FUSE-AXIAL LEAD;125V,5A,FAST-ACTING,GLAS	
...3	F871	3601-001086	FUSE-AXIAL LEAD;125V,5A,FAST-ACTING,GLAS	
...3	L481	3301-000287	CORE-FERRITE BEAD;AA,3.5x1.0x6.0mm,1500,	
...3	L483	2901-000299	FILTER-EMI ON BOARD;-,6A,UL/CSA,-,9x7.5,	
...3	L492	2701-000115	INDUCTOR-AXIAL;10uH,10%,3x7mm	
...3	L493	2901-000297	FILTER-EMI ON BOARD;-,3A,-,-,3.5x5,TP,-	
...3	L494	3301-000287	CORE-FERRITE BEAD;AA,3.5x1.0x6.0mm,1500,	
...3	L495	2901-000297	FILTER-EMI ON BOARD;-,3A,-,-,3.5x5,TP,-	
...3	L806	2901-000297	FILTER-EMI ON BOARD;-,3A,-,-,3.5x5,TP,-	
...3	L807	2901-000297	FILTER-EMI ON BOARD;-,3A,-,-,3.5x5,TP,-	
...3	L808	3301-000287	CORE-FERRITE BEAD;AA,3.5x1.0x6.0mm,1500,	
...3	L810	2901-000297	FILTER-EMI ON BOARD;-,3A,-,-,3.5x5,TP,-	
...3	L811	2901-000297	FILTER-EMI ON BOARD;-,3A,-,-,3.5x5,TP,-	
...3	L812	2901-000297	FILTER-EMI ON BOARD;-,3A,-,-,3.5x5,TP,-	
...3	L813	2901-000297	FILTER-EMI ON BOARD;-,3A,-,-,3.5x5,TP,-	
...3	L814	3301-000287	CORE-FERRITE BEAD;AA,3.5x1.0x6.0mm,1500,	
...3	L815	2901-000297	FILTER-EMI ON BOARD;-,3A,-,-,3.5x5,TP,-	
...3	L816	2901-000297	FILTER-EMI ON BOARD;-,3A,-,-,3.5x5,TP,-	
...3	L831	3301-000287	CORE-FERRITE BEAD;AA,3.5x1.0x6.0mm,1500,	
...3	L832	3301-000287	CORE-FERRITE BEAD;AA,3.5x1.0x6.0mm,1500,	
...3	L851	2901-000297	FILTER-EMI ON BOARD;-,3A,-,-,3.5x5,TP,-	
...3	L857	3301-000287	CORE-FERRITE BEAD;AA,3.5x1.0x6.0mm,1500,	
...3	L859	3301-000287	CORE-FERRITE BEAD;AA,3.5x1.0x6.0mm,1500,	
...3	Q301	0501-000389	TR-SMALL SIGNAL;KSC815,NPN,400mW,TO-92,T	
...3	Q432	0501-000283	TR-SMALL SIGNAL;KSA539,PNP,400mW,TO-92,T	
...3	R301	2004-001897	R-METAL(S);43.2Kohm,1%,1/2W,AA,TP,2.5x6.	
...3	R302	2004-001897	R-METAL(S);43.2Kohm,1%,1/2W,AA,TP,2.5x6.	

Level	Loc. No.	Code No.	Description ; Specification	Remark
...3	R303	2004-001984	R-METAL(S);26.7Kohm,1%,1/2W,AA,TP,2.4x6.	
...3	R305	2004-001984	R-METAL(S);26.7Kohm,1%,1/2W,AA,TP,2.4x6.	
...3	R306	2003-001036	R-METAL OXIDE(S);3.3ohm,5%,2W,AF,TP,3.9x	
...3	R307	2003-001036	R-METAL OXIDE(S);3.3ohm,5%,2W,AF,TP,3.9x	
...3	R308	2001-000016	R-CARBON(S);1OHM,5%,1/2W,AA,TP,2.4X6.4MM	
...3	R310	2003-002150	R-METAL OXIDE;27OOHM,5%,2W,AG,TP,6X16MM	
...3	R312	2001-000290	R-CARBON;10KOHM,5%,1/8W,AA,TP,1.8X3.2MM	
...3	R313	2001-000761	R-CARBON;43OOHM,5%,1/8W,AA,TP,1.8X3.2MM	
...3	R314	2001-000761	R-CARBON;43OOHM,5%,1/8W,AA,TP,1.8X3.2MM	
...3	R332	2001-001107	R-CARBON(S);220ohm,5%,1/2W,AA,TP,2.4x6.4	
...3	R333	2001-001107	R-CARBON(S);220ohm,5%,1/2W,AA,TP,2.4x6.4	
...3	R334	2001-001107	R-CARBON(S);220ohm,5%,1/2W,AA,TP,2.4x6.4	
...3	R405	2009-001109	R-TEMPERATURE;240ohm,5%,1/4W,AA,TP,2.3x6	
...3	R406	2004-001983	R-METAL(S);2.49Kohm,1%,1/2W,AA,TP,2.4x6.	
...3	R407	2004-001897	R-METAL(S);43.2Kohm,1%,1/2W,AA,TP,2.5x6.	
...3	R408	2004-001402	R-METAL(S);6.8Kohm,1%,1/2W,AA,TP,2.4x6.4	
...3	R409	2001-001178	R-CARBON(S);680OHM,5%,1/2W,AA,TP,2.4X6.4	
...3	R410	2001-000052	R-CARBON(S);3.3KOHM,5%,1/2W,AA,TP,2.4X6.	
...3	R412	2001-000362	R-CARBON;150OHM,5%,1/8W,AA,TP,1.8X3.2MM	
...3	R419	2001-000290	R-CARBON;10KOHM,5%,1/8W,AA,TP,1.8X3.2MM	
...3	R424	2008-000299	R-FUSIBLE(S);47ohm,5%,2W,AF,TP,3.9x10mm	
...3	R426	2003-002153	R-METAL OXIDE;4.7OHM,5%,2W,AG,TP,6X16MM	
...3	R427	2003-002152	R-METAL OXIDE;1OHM,5%,2W,AG,TP,6X16MM	
...3	R427A	2003-002152	R-METAL OXIDE;1OHM,5%,2W,AG,TP,6X16MM	
...3	R428	2002-001017	R-COMPOSITION;1Kohm,10%,1/2W,AA,TP,3.7x9	
...3	R428A	2002-001017	R-COMPOSITION;1Kohm,10%,1/2W,AA,TP,3.7x9	
...3	R429	2003-000586	R-METAL OXIDE(S);22Kohm,5%,2W,AF,TP,4x12	
...3	R430	2003-000586	R-METAL OXIDE(S);22Kohm,5%,2W,AF,TP,4x12	
...3	R433	2001-001155	R-CARBON(S);5.6KOHM,5%,1/2W,AA,TP,2.4X6.	
...3	R434	2001-001093	R-CARBON(S);2.2KOHM,5%,1/2W,AA,TP,2.4X6.	
...3	R441	2008-000189	R-FUSIBLE;0.47ohm,10%,2W,AA,TP,6x15.5mm	
...3	R444	2003-000995	R-METAL OXIDE(S);3.3Kohm,5%,2W,AF,TP,3.9	
...3	R462	2003-002026	R-METAL OXIDE(S);4.7ohm,5%,1W,AF,TP,2.5x	
...3	R463	2003-001024	R-METAL OXIDE(S);150ohm,5%,2W,AF,TP,3.9x	
...3	R464	2003-002158	R-METAL OXIDE;0.68OHM,5%,1W,AG,TP,4.3X12	
...3	R465	2001-001043	R-CARBON(S);0OHM,5%,1/2W,AA,TP,2.4X6.4MM	
...3	R466	2004-001386	R-METAL(S);16.9Kohm,1%,1/2W,AA,TP,2.4x6.	
...3	R467	2004-001986	R-METAL(S);35.7Kohm,1%,1/2W,AA,TP,2.4x6.	
...3	R468	2001-001122	R-CARBON(S);3.9KOHM,5%,1/2W,AA,TP,2.4X6.	
...3	R469	2004-001390	R-METAL(S);1Kohm,2%,1/2W,AA,TP,2.4x6.4mm	
...3	R470	2001-000028	R-CARBON(S);100OHM,5%,1/2W,AA,TP,2.4X6.4	
...3	R471	2004-002011	R-METAL(S);110Kohm,1%,1/2W,AA,TP,2.4x6.4	
...3	R472	2008-000252	R-FUSIBLE(S);0.47ohm,10%,1/2W,AF,TP,2.5x	
...3	R473	2004-001395	R-METAL(S);330Kohm,2%,1/2W,AA,TP,2.4x6.4	
...3	R486	2003-002014	R-METAL OXIDE(S);0.6OHM,5%,2W,AF,TP,3.9X	
...3	R488	2001-000273	R-CARBON;100KOHM,5%,1/8W,AA,TP,1.8X3.2M	
...3	R808	2001-000002	R-CARBON(S);200KOHM,5%,1/2W,AA,TP,6.4X2.	
...3	R808A	2001-000002	R-CARBON(S);200KOHM,5%,1/2W,AA,TP,6.4X2.	
...3	R810	2002-001010	R-COMPOSITION;1.8Mohm,5%,1/2W,AA,TP,3.7x	
...3	R812	2003-002151	R-METAL OXIDE;18KOHM,5%,2W,AG,TP,6X16MM	
...3	R814	2003-002151	R-METAL OXIDE;18KOHM,5%,2W,AG,TP,6X16MM	
...3	R816	2004-004029	R-METAL(S);10Kohm,1%,1/2W,AA,TP,2.5x6.5m	
...3	R825	2002-001010	R-COMPOSITION;1.8Mohm,5%,1/2W,AA,TP,3.7x	
...3	R832	2001-001178	R-CARBON(S);680OHM,5%,1/2W,AA,TP,2.4X6.4	
...3	R834	2001-001097	R-CARBON(S);2.4KOHM,5%,1/2W,AA,TP,2.4X6.	
...3	R837	2001-001097	R-CARBON(S);2.4KOHM,5%,1/2W,AA,TP,2.4X6.	
...3	R838	2001-001097	R-CARBON(S);2.4KOHM,5%,1/2W,AA,TP,2.4X6.	
...3	R855	2001-001196	R-CARBON(S);9.1KOHM,5%,1/2W,AA,TP,2.4X6.	
...3	R856	2001-001155	R-CARBON(S);5.6KOHM,5%,1/2W,AA,TP,2.4X6.	
...3	R857	2001-001155	R-CARBON(S);5.6KOHM,5%,1/2W,AA,TP,2.4X6.	
...3	R871	2001-001088	R-CARBON(S);1KOHM,5%,1/2W,AA,TP,2.4X6.4M	
...3	R872	2001-001088	R-CARBON(S);1KOHM,5%,1/2W,AA,TP,2.4X6.4M	
...3	R873	2001-001097	R-CARBON(S);2.4KOHM,5%,1/2W,AA,TP,2.4X6.	
...3	R891	2002-001012	R-COMPOSITION;8.2Mohm,5%,1/2W,AA,TP,3.7x	
...3	VR471	2103-001024	VR-SEMI;50Kohm,25%,0.3W,TOP	
..2		AA65-30105B	CLAMP-WIRE;NYLON 66,V2,NTR,25MM,ALL MODE	S.N.A
..2		6003-001023	SCREW-TAPTITE;RWH,+,B,M3,L10,ZPC(YEL),SW	S.N.A

ASSY-PCB,CONV MDL

1	*	AA95-00422B	ASSY-PCB,CONV MDL;-,SP43J5HP,J51A,-,-,-	
..2	C163	2305-000289	C-FILM,MPEF;220nF,5%,63V,TP,-,5mm	
..2	CN101	3711-002709	CONNECTOR-HEADER;NOWALL,12P,1R,2.5MM,ANG	
..2	CN102	3711-002709	CONNECTOR-HEADER;NOWALL,12P,1R,2.5MM,ANG	

Level	Loc. No.	Code No.	Description ; Specification	Remark
⚠ ..2	IC113	1203-000641	IC-RESET;7442,TO-92,3P,-,PLASTIC,-0.3/7	
..2		0202-001004	SOLDER-CREAM;SQ-2030M SZH-1,S63A,D0.04,6	S.N.A
..2		0202-000187	SOLDER-WIRE FLUX;-,RS60S,D1.2,63Sn/37Pb	S.N.A
..2		AA63-00143A	SHIELD-CASE;-,SPTE T0.5,T0.5,ALLMIGHT,CO	S.N.A
..2		AA99-20068A	ASSY-PCB SUB,AUTO; AA95-00422B ,V	S.N.A
...3	C101	2404-000275	C-TA,CHIP;100UF,10%,10V,GP,TP,7343	
...3	C102	2404-000275	C-TA,CHIP;100UF,10%,10V,GP,TP,7343	
...3	C103	2404-000256	C-TA,CHIP;47UF,20%,16V,GP,TP,7343	
...3	C104	2203-000218	C-CERAMIC,CHIP;100nF,20%,50V,Y5V,TP,2012	
...3	C105	2203-000858	C-CERAMIC,CHIP;0.039nF,5%,50V,NP0,TP,201	
...3	C106	2203-000218	C-CERAMIC,CHIP;100nF,20%,50V,Y5V,TP,2012	
...3	C107	2203-000716	C-CERAMIC,CHIP;3.3nF,10%,50V,X7R,TP,2012	
...3	C108	2203-000218	C-CERAMIC,CHIP;100nF,20%,50V,Y5V,TP,2012	
...3	C109	2203-000218	C-CERAMIC,CHIP;100nF,20%,50V,Y5V,TP,2012	
...3	C110	2203-000444	C-CERAMIC,CHIP;1nF,10%,50V,X7R,TP,2012,-	
...3	C111	2203-000218	C-CERAMIC,CHIP;100nF,20%,50V,Y5V,TP,2012	
...3	C112	2203-000683	C-CERAMIC,CHIP;0.027nF,5%,50V,NP0,TP,201	
...3	C113	2203-000683	C-CERAMIC,CHIP;0.027nF,5%,50V,NP0,TP,201	
...3	C114	2203-000218	C-CERAMIC,CHIP;100nF,20%,50V,Y5V,TP,2012	
...3	C115	2203-000218	C-CERAMIC,CHIP;100nF,20%,50V,Y5V,TP,2012	
...3	C116	2203-000218	C-CERAMIC,CHIP;100nF,20%,50V,Y5V,TP,2012	
...3	C117	2203-000218	C-CERAMIC,CHIP;100nF,20%,50V,Y5V,TP,2012	
...3	C118	2203-000218	C-CERAMIC,CHIP;100nF,20%,50V,Y5V,TP,2012	
...3	C119	2203-000218	C-CERAMIC,CHIP;100nF,20%,50V,Y5V,TP,2012	
...3	C120	2203-000218	C-CERAMIC,CHIP;100nF,20%,50V,Y5V,TP,2012	
...3	C121	2203-000218	C-CERAMIC,CHIP;100nF,20%,50V,Y5V,TP,2012	
...3	C122	2203-000218	C-CERAMIC,CHIP;100nF,20%,50V,Y5V,TP,2012	
...3	C123	2203-000218	C-CERAMIC,CHIP;100nF,20%,50V,Y5V,TP,2012	
...3	C124	2203-000218	C-CERAMIC,CHIP;100nF,20%,50V,Y5V,TP,2012	
...3	C125	2203-000218	C-CERAMIC,CHIP;100nF,20%,50V,Y5V,TP,2012	
...3	C126	2203-000218	C-CERAMIC,CHIP;100nF,20%,50V,Y5V,TP,2012	
...3	C127	2203-000218	C-CERAMIC,CHIP;100nF,20%,50V,Y5V,TP,2012	
...3	C128	2203-000218	C-CERAMIC,CHIP;100nF,20%,50V,Y5V,TP,2012	
...3	C129	2203-000218	C-CERAMIC,CHIP;100nF,20%,50V,Y5V,TP,2012	
...3	C130	2203-000218	C-CERAMIC,CHIP;100nF,20%,50V,Y5V,TP,2012	
...3	C131	2203-000218	C-CERAMIC,CHIP;100nF,20%,50V,Y5V,TP,2012	
...3	C132	2203-000408	C-CERAMIC,CHIP;0.18nF,5%,50V,NP0,TP,2012	
...3	C133	2404-001098	C-TA,CHIP;1uF,20%,25V,GP,TP,3216,-	
...3	C134	2203-000218	C-CERAMIC,CHIP;100nF,20%,50V,Y5V,TP,2012	
...3	C135	2203-000716	C-CERAMIC,CHIP;3.3nF,10%,50V,X7R,TP,2012	
...3	C136	2203-000218	C-CERAMIC,CHIP;100nF,20%,50V,Y5V,TP,2012	
...3	C137	2203-000716	C-CERAMIC,CHIP;3.3nF,10%,50V,X7R,TP,2012	
...3	C138	2203-000408	C-CERAMIC,CHIP;0.18nF,5%,50V,NP0,TP,2012	
...3	C139	2203-000218	C-CERAMIC,CHIP;100nF,20%,50V,Y5V,TP,2012	
...3	C140	2404-001098	C-TA,CHIP;1uF,20%,25V,GP,TP,3216,-	
...3	C141	2203-000408	C-CERAMIC,CHIP;0.18nF,5%,50V,NP0,TP,2012	
...3	C142	2404-001098	C-TA,CHIP;1uF,20%,25V,GP,TP,3216,-	
...3	C143	2203-000218	C-CERAMIC,CHIP;100nF,20%,50V,Y5V,TP,2012	
...3	C144	2203-000716	C-CERAMIC,CHIP;3.3nF,10%,50V,X7R,TP,2012	
...3	C145	2203-000218	C-CERAMIC,CHIP;100nF,20%,50V,Y5V,TP,2012	
...3	C146	2203-000716	C-CERAMIC,CHIP;3.3nF,10%,50V,X7R,TP,2012	
...3	C147	2203-000408	C-CERAMIC,CHIP;0.18nF,5%,50V,NP0,TP,2012	
...3	C148	2404-001098	C-TA,CHIP;1uF,20%,25V,GP,TP,3216,-	
...3	C149	2203-000218	C-CERAMIC,CHIP;100nF,20%,50V,Y5V,TP,2012	
...3	C150	2203-000218	C-CERAMIC,CHIP;100nF,20%,50V,Y5V,TP,2012	
...3	C151	2203-000408	C-CERAMIC,CHIP;0.18nF,5%,50V,NP0,TP,2012	
...3	C152	2404-001098	C-TA,CHIP;1uF,20%,25V,GP,TP,3216,-	
...3	C153	2203-000218	C-CERAMIC,CHIP;100nF,20%,50V,Y5V,TP,2012	
...3	C154	2203-000716	C-CERAMIC,CHIP;3.3nF,10%,50V,X7R,TP,2012	
...3	C155	2203-000218	C-CERAMIC,CHIP;100nF,20%,50V,Y5V,TP,2012	
...3	C156	2203-000716	C-CERAMIC,CHIP;3.3nF,10%,50V,X7R,TP,2012	
...3	C157	2203-000408	C-CERAMIC,CHIP;0.18nF,5%,50V,NP0,TP,2012	
...3	C158	2404-001098	C-TA,CHIP;1uF,20%,25V,GP,TP,3216,-	
...3	C159	2203-000218	C-CERAMIC,CHIP;100nF,20%,50V,Y5V,TP,2012	
...3	C160	2203-000218	C-CERAMIC,CHIP;100nF,20%,50V,Y5V,TP,2012	
...3	C161	2404-000256	C-TA,CHIP;47UF,20%,16V,GP,TP,7343	
...3	C162	2404-000256	C-TA,CHIP;47UF,20%,16V,GP,TP,7343	
...3	C164	2404-001229	C-TA,CHIP;4.7uF,20%,25V,GP,TP,3528	
...3	C165	2203-000218	C-CERAMIC,CHIP;100nF,20%,50V,Y5V,TP,2012	
...3	C166	2203-000218	C-CERAMIC,CHIP;100nF,20%,50V,Y5V,TP,2012	
...3	C167	2404-000123	C-TA,CHIP;10uF,20%,16V,-,TP,6032,2.9mm	
...3	C168	2203-000218	C-CERAMIC,CHIP;100nF,20%,50V,Y5V,TP,2012	
...3	C169	2203-000218	C-CERAMIC,CHIP;100nF,20%,50V,Y5V,TP,2012	
...3	C170	2203-000218	C-CERAMIC,CHIP;100nF,20%,50V,Y5V,TP,2012	
...3	C171	2404-001098	C-TA,CHIP;1uF,20%,25V,GP,TP,3216,-	
...3	C172	2404-000256	C-TA,CHIP;47UF,20%,16V,GP,TP,7343	
...3	C173	2404-000256	C-TA,CHIP;47UF,20%,16V,GP,TP,7343	

Level	Loc. No.	Code No.	Description ; Specification	Remark
...3	C174	2404-000256	C-TA,CHIP;47UF,20%,16V,GP,TP,7343	
...3	C201	2203-000408	C-CERAMIC,CHIP;0.18nF,5%,50V,NP0,TP,2012	
...3	C202	2203-000408	C-CERAMIC,CHIP;0.18nF,5%,50V,NP0,TP,2012	
...3	C203	2203-000408	C-CERAMIC,CHIP;0.18nF,5%,50V,NP0,TP,2012	
...3	C204	2203-000408	C-CERAMIC,CHIP;0.18nF,5%,50V,NP0,TP,2012	
...3	C205	2203-000408	C-CERAMIC,CHIP;0.18nF,5%,50V,NP0,TP,2012	
...3	C206	2203-000408	C-CERAMIC,CHIP;0.18nF,5%,50V,NP0,TP,2012	
...3	D101	0401-000160	DIODE-SWITCHING;ISS314,30V,100mA,USC,TP	
...3	D102	0401-000160	DIODE-SWITCHING;ISS314,30V,100mA,USC,TP	
...3	DZ101	0403-001016	DIODE-ZENER;RLZ6.2B,6.2V,5.96-6.27V,400m	
...3	DZ102	0403-001016	DIODE-ZENER;RLZ6.2B,6.2V,5.96-6.27V,400m	
...3	DZ104	0403-001016	DIODE-ZENER;RLZ6.2B,6.2V,5.96-6.27V,400m	
...3	DZ105	0403-001016	DIODE-ZENER;RLZ6.2B,6.2V,5.96-6.27V,400m	
...3	DZ106	0403-001016	DIODE-ZENER;RLZ6.2B,6.2V,5.96-6.27V,400m	
...3	DZ107	0403-001016	DIODE-ZENER;RLZ6.2B,6.2V,5.96-6.27V,400m	
...3	DZ108	0403-001016	DIODE-ZENER;RLZ6.2B,6.2V,5.96-6.27V,400m	
...3	DZ109	0403-001016	DIODE-ZENER;RLZ6.2B,6.2V,5.96-6.27V,400m	
...3	DZ110	0403-001016	DIODE-ZENER;RLZ6.2B,6.2V,5.96-6.27V,400m	
...3	DZ111	0403-001016	DIODE-ZENER;RLZ6.2B,6.2V,5.96-6.27V,400m	
...3	DZ112	0403-001016	DIODE-ZENER;RLZ6.2B,6.2V,5.96-6.27V,400m	
...3	DZ113	0403-001016	DIODE-ZENER;RLZ6.2B,6.2V,5.96-6.27V,400m	
...3	DZ114	0403-001016	DIODE-ZENER;RLZ6.2B,6.2V,5.96-6.27V,400m	
...3	DZ115	0403-001016	DIODE-ZENER;RLZ6.2B,6.2V,5.96-6.27V,400m	
...3	DZ116	0403-001016	DIODE-ZENER;RLZ6.2B,6.2V,5.96-6.27V,400m	
...3	DZ117	0403-001284	DIODE-ZENER;RLZ3.3A,3.16-3.38V,500MW,LL-	
...3	EF101	2901-000229	FILTER-EMI SMD;50V,0.3A,-,22000pF,4.5x3.	
...3	EF102	2901-000229	FILTER-EMI SMD;50V,0.3A,-,22000pF,4.5x3.	
...3	EF104	2901-000226	FILTER-EMI SMD;25V,0.3A,-,100pF,3.2x1.25	
...3	EF105	2901-000226	FILTER-EMI SMD;25V,0.3A,-,100pF,3.2x1.25	
...3	EF106	2901-000226	FILTER-EMI SMD;25V,0.3A,-,100pF,3.2x1.25	
...3	EF107	2901-000226	FILTER-EMI SMD;25V,0.3A,-,100pF,3.2x1.25	
...3	EF108	2901-000226	FILTER-EMI SMD;25V,0.3A,-,100pF,3.2x1.25	
...3	EF109	2901-000226	FILTER-EMI SMD;25V,0.3A,-,100pF,3.2x1.25	
...3	EF110	2901-000226	FILTER-EMI SMD;25V,0.3A,-,100pF,3.2x1.25	
...3	EF111	2901-000226	FILTER-EMI SMD;25V,0.3A,-,100pF,3.2x1.25	
...3	EF112	2901-000226	FILTER-EMI SMD;25V,0.3A,-,100pF,3.2x1.25	
...3	EF113	2901-000226	FILTER-EMI SMD;25V,0.3A,-,100pF,3.2x1.25	
...3	EF114	2901-000226	FILTER-EMI SMD;25V,0.3A,-,100pF,3.2x1.25	
...3	EF115	2901-000226	FILTER-EMI SMD;25V,0.3A,-,100pF,3.2x1.25	
...3	EF116	2901-000226	FILTER-EMI SMD;25V,0.3A,-,100pF,3.2x1.25	
⚠ ...3	IC101	AA13-00071A	IC-ASIC;-,SDC91,QFP,208P,CONV CONTROLL	
⚠ ...3	IC102	0801-001043	IC-CMOS LOGIC;74HC4046,PHASE-LOCKED-LOOP	
⚠ ...3	IC103	AA09-00032A	IC-MCU;TSC87251G2D-OTP,TSC87251G2D-OT	
⚠ ...3	IC104	1103-001167	IC-EEPROM;28C64,8KX8BIT,TSOP,28P,-,120NS	
⚠ ...3	IC105	1201-001520	IC-VIDEO AMP;2210,SOP,8P,150MIL,DUAL,7dB	
⚠ ...3	IC106	1201-001504	IC-OP AMP;072,SOP,8P,150MIL,DUAL,-,PLAST	
⚠ ...3	IC107	1201-001504	IC-OP AMP;072,SOP,8P,150MIL,DUAL,-,PLAST	
⚠ ...3	IC108	1201-001504	IC-OP AMP;072,SOP,8P,150MIL,DUAL,-,PLAST	
⚠ ...3	IC109	0801-001156	IC-CMOS LOGIC;74HC4066,BILATERAL SWITCH,	
⚠ ...3	IC110	0801-001156	IC-CMOS LOGIC;74HC4066,BILATERAL SWITCH,	
⚠ ...3	IC111	1001-000105	IC-ANALOG SWITCH;CD4066BM,BILATERAL CMOS	
⚠ ...3	IC112	1001-000105	IC-ANALOG SWITCH;CD4066BM,BILATERAL CMOS	
...3	PCB	AA41-00188D	PCB-CONVERGENCE MODULE;SVP-43J4M,FR-4,4L	S.N.A
...3	Q101	0501-000280	TR-SMALL SIGNAL;KSA1182,PNP,150mW,SOT-23	
...3	Q102	0501-000342	TR-SMALL SIGNAL;KSC1623-Y,NPN,200mW,SOT-	
...3	Q103	0501-000342	TR-SMALL SIGNAL;KSC1623-Y,NPN,200mW,SOT-	
...3	Q104	0501-000280	TR-SMALL SIGNAL;KSA1182,PNP,150mW,SOT-23	
...3	Q105	0501-000342	TR-SMALL SIGNAL;KSC1623-Y,NPN,200mW,SOT-	
...3	Q106	0501-000342	TR-SMALL SIGNAL;KSC1623-Y,NPN,200mW,SOT-	
...3	Q107	0501-000342	TR-SMALL SIGNAL;KSC1623-Y,NPN,200mW,SOT-	
...3	Q108	0501-000280	TR-SMALL SIGNAL;KSA1182,PNP,150mW,SOT-23	
...3	Q109	0505-000257	FET-SILICON;2SK217,N,-,20mA,-,150mW,SOT-	S.N.A
...3	Q110	0505-000257	FET-SILICON;2SK217,N,-,20mA,-,150mW,SOT-	S.N.A
...3	Q111	0505-000257	FET-SILICON;2SK217,N,-,20mA,-,150mW,SOT-	S.N.A
...3	Q112	0505-000257	FET-SILICON;2SK217,N,-,20mA,-,150mW,SOT-	S.N.A
...3	Q113	0505-000257	FET-SILICON;2SK217,N,-,20mA,-,150mW,SOT-	S.N.A
...3	Q114	0505-000257	FET-SILICON;2SK217,N,-,20mA,-,150mW,SOT-	S.N.A
...3	R101	2007-000881	R-CHIP;4.7OHM,5%,1/10W,DA,TP,2012	
...3	R102	2007-000881	R-CHIP;4.7OHM,5%,1/10W,DA,TP,2012	
...3	R103	2007-000881	R-CHIP;4.7OHM,5%,1/10W,DA,TP,2012	
...3	R104	2007-000881	R-CHIP;4.7OHM,5%,1/10W,DA,TP,2012	
...3	R105	2007-000415	R-CHIP;15OHM,5%,1/10W,DA,TP,2012	
...3	R106	2007-000947	R-CHIP;47OHM,5%,1/10W,DA,TP,2012	
...3	R107	2007-000282	R-CHIP;100KOHM,5%,1/10W,DA,TP,2012	
...3	R108	2007-000872	R-CHIP;4.7KOHM,5%,1/10W,DA,TP,2012	
...3	R109	2007-000493	R-CHIP;2.2KOHM,5%,1/10W,DA,TP,2012	
...3	R110	2007-000221	R-CHIP;1.2KOHM,5%,1/10W,DA,TP,2012	
...3	R111	2007-000380	R-CHIP;13KOHM,5%,1/10W,DA,TP,2012	
...3	R112	2007-000468	R-CHIP;1KOHM,5%,1/10W,DA,TP,2012	
...3	R113	2007-001097	R-CHIP;62KOHM,5%,1/10W,DA,TP,2012	
...3	R114	2007-000468	R-CHIP;1KOHM,5%,1/10W,DA,TP,2012	
...3	R116	2007-000468	R-CHIP;1KOHM,5%,1/10W,DA,TP,2012	
...3	R117	2007-000468	R-CHIP;1KOHM,5%,1/10W,DA,TP,2012	
...3	R118	2007-000468	R-CHIP;1KOHM,5%,1/10W,DA,TP,2012	
...3	R119	2007-000468	R-CHIP;1KOHM,5%,1/10W,DA,TP,2012	
...3	R120	2007-000401	R-CHIP;150OHM,5%,1/10W,DA,TP,2012	
...3	R121	2007-000023	R-CHIP;120OHM,5%,1/10W,DA,TP,2012	
...3	R122	2007-000468	R-CHIP;1KOHM,5%,1/10W,DA,TP,2012	
...3	R123	2007-000401	R-CHIP;150OHM,5%,1/10W,DA,TP,2012	
...3	R124	2007-000468	R-CHIP;1KOHM,5%,1/10W,DA,TP,2012	
...3	R125	2007-000401	R-CHIP;150OHM,5%,1/10W,DA,TP,2012	
...3	R126	2007-000401	R-CHIP;150OHM,5%,1/10W,DA,TP,2012	
...3	R127	2007-000401	R-CHIP;150OHM,5%,1/10W,DA,TP,2012	
...3	R128	2007-000290	R-CHIP;100OHM,5%,1/10W,DA,TP,2012	
...3	R129	2007-000465	R-CHIP;1KOHM,1%,1/10W,DA,TP,2012	
...3	R130	2007-000868	R-CHIP;4.7KOHM,1%,1/10W,DA,TP,2012	
...3	R131	2007-000981	R-CHIP;5.6KOHM,5%,1/10W,DA,TP,2012	
...3	R132	2007-000465	R-CHIP;1KOHM,1%,1/10W,DA,TP,2012	
...3	R133	2007-000868	R-CHIP;4.7KOHM,1%,1/10W,DA,TP,2012	
...3	R134	2007-000981	R-CHIP;5.6KOHM,5%,1/10W,DA,TP,2012	
...3	R135	2007-000290	R-CHIP;100OHM,5%,1/10W,DA,TP,2012	
...3	R136	2007-000290	R-CHIP;100OHM,5%,1/10W,DA,TP,2012	
...3	R137	2007-000465	R-CHIP;1KOHM,1%,1/10W,DA,TP,2012	
...3	R138	2007-000868	R-CHIP;4.7KOHM,1%,1/10W,DA,TP,2012	
...3	R139	2007-000981	R-CHIP;5.6KOHM,5%,1/10W,DA,TP,2012	
...3	R140	2007-000465	R-CHIP;1KOHM,1%,1/10W,DA,TP,2012	
...3	R141	2007-000868	R-CHIP;4.7KOHM,1%,1/10W,DA,TP,2012	
...3	R142	2007-000981	R-CHIP;5.6KOHM,5%,1/10W,DA,TP,2012	
...3	R143	2007-000290	R-CHIP;100OHM,5%,1/10W,DA,TP,2012	
...3	R144	2007-000290	R-CHIP;100OHM,5%,1/10W,DA,TP,2012	
...3	R145	2007-000465	R-CHIP;1KOHM,1%,1/10W,DA,TP,2012	
...3	R146	2007-000868	R-CHIP;4.7KOHM,1%,1/10W,DA,TP,2012	
...3	R147	2007-000981	R-CHIP;5.6KOHM,5%,1/10W,DA,TP,2012	
...3	R148	2007-000465	R-CHIP;1KOHM,1%,1/10W,DA,TP,2012	
...3	R149	2007-000868	R-CHIP;4.7KOHM,1%,1/10W,DA,TP,2012	
...3	R150	2007-000981	R-CHIP;5.6KOHM,5%,1/10W,DA,TP,2012	
...3	R151	2007-000290	R-CHIP;100OHM,5%,1/10W,DA,TP,2012	
...3	R152	2007-000282	R-CHIP;100KOHM,5%,1/10W,DA,TP,2012	
...3	R153	2007-000872	R-CHIP;4.7KOHM,5%,1/10W,DA,TP,2012	
...3	R154	2007-000774	R-CHIP;33KOHM,5%,1/10W,DA,TP,2012	
...3	R155	2007-000300	R-CHIP;10KOHM,5%,1/10W,DA,TP,2012	
...3	R156	2007-001055	R-CHIP;6.2KOHM,5%,1/10W,DA,TP,2012	
...3	R157	2007-000671	R-CHIP;2KOHM,5%,1/10W,DA,TP,2012	
...3	R158	2007-000468	R-CHIP;1KOHM,5%,1/10W,DA,TP,2012	
...3	R159	2007-001166	R-CHIP;75OHM,5%,1/10W,DA,TP,2012	
...3	R160	2007-000766	R-CHIP;330OHM,5%,1/10W,DA,TP,2012	
...3	R161	2007-000290	R-CHIP;100OHM,5%,1/10W,DA,TP,2012	
...3	R162	2007-000290	R-CHIP;100OHM,5%,1/10W,DA,TP,2012	
...3	R163	2007-000290	R-CHIP;100OHM,5%,1/10W,DA,TP,2012	
...3	R164	2007-000468	R-CHIP;1KOHM,5%,1/10W,DA,TP,2012	
...3	R165	2007-000468	R-CHIP;1KOHM,5%,1/10W,DA,TP,2012	
...3	R166	2007-000468	R-CHIP;1KOHM,5%,1/10W,DA,TP,2012	
...3	R167	2007-000468	R-CHIP;1KOHM,5%,1/10W,DA,TP,2012	
...3	R168	2007-000468	R-CHIP;1KOHM,5%,1/10W,DA,TP,2012	
...3	R169	2007-000703	R-CHIP;3.6KOHM,5%,1/10W,DA,TP,2012	
...3	R170	2007-000468	R-CHIP;1KOHM,5%,1/10W,DA,TP,2012	
...3	R171	2007-000221	R-CHIP;1.2KOHM,5%,1/10W,DA,TP,2012	
...3	R172	2007-000642	R-CHIP;270OHM,5%,1/10W,DA,TP,2012	
...3	R173	2007-000030	R-CHIP;560OHM,5%,1/10W,DA,TP,2012	
...3	R174	2007-000030	R-CHIP;560OHM,5%,1/10W,DA,TP,2012	
...3	R175	2007-000282	R-CHIP;100KOHM,5%,1/10W,DA,TP,2012	
...3	R176	2007-000872	R-CHIP;4.7KOHM,5%,1/10W,DA,TP,2012	
...3	R177	2007-000872	R-CHIP;4.7KOHM,5%,1/10W,DA,TP,2012	
...3	R178	2007-000728	R-CHIP;300OHM,5%,1/10W,DA,TP,2012	
...3	R179	2007-000728	R-CHIP;300OHM,5%,1/10W,DA,TP,2012	
...3	R180	2007-000728	R-CHIP;300OHM,5%,1/10W,DA,TP,2012	
...3	R181	2007-000728	R-CHIP;300OHM,5%,1/10W,DA,TP,2012	
...3	R182	2007-000728	R-CHIP;300OHM,5%,1/10W,DA,TP,2012	
...3	R183	2007-000728	R-CHIP;300OHM,5%,1/10W,DA,TP,2012	
...3	R184	2007-000830	R-CHIP;39KOHM,5%,1/10W,DA,TP,2012	
...3	R201	2007-000029	R-CHIP;0OHM,5%,1/10W,DA,TP,2012	
...3	R203	2007-000565	R-CHIP;220KOHM,5%,1/10W,DA,TP,2012	

Level	Loc. No.	Code No.	Description ; Specification	Remark
...3	R204	2007-000565	R-CHIP;220KOHM,5%,1/10W,DA,TP,2012	
...3	R205	2007-000565	R-CHIP;220KOHM,5%,1/10W,DA,TP,2012	
...3	R206	2007-000565	R-CHIP;220KOHM,5%,1/10W,DA,TP,2012	
...3	R207	2007-000565	R-CHIP;220KOHM,5%,1/10W,DA,TP,2012	
...3	R208	2007-000565	R-CHIP;220KOHM,5%,1/10W,DA,TP,2012	
...3	X101	2801-003860	CRYSTAL-SMD;24MHz,30ppm,28-ABV,20pF,50oh	

ASSY-PCB,H/V

Level	Loc. No.	Code No.	Description ; Specification	Remark
1	*	AA95-00056C	ASSY-PCB,H/V;-,SP43J5HP3S/XTT,J51A,-,-,-	
..2	BK01	AA61-10068A	BRACKET-PCB;-,M2160,SPTE,T0.3,-,-,-	S.N.A
..2	BK02	AA61-10068A	BRACKET-PCB;-,M2160,SPTE,T0.3,-,-,-	S.N.A
..2	BK03	AA61-10068A	BRACKET-PCB;-,M2160,SPTE,T0.3,-,-,-	S.N.A
..2	CN401	3711-001049	CONNECTOR-HEADER;BOX,6P,1R,2.5mm,ANGLE,-	
..2	CN402	3711-002709	CONNECTOR-HEADER;NOWALL,12P,1R,2.5MM,ANG	
..2	CN403	AA39-20052A	LEAD CONNECTOR-ASSY;-,YBNH025-04,YSH025-	
..2	CN404	3711-001283	CONNECTOR-HEADER;NOWALL,14P,1R,2.5mm,ANG	
⚠ ..2	IC471	1203-000610	IC-PWM CONTROLLER;494,DIP,16P,300MIL,PLA	
..2	L351	AA27-10003M	COIL-CHOKE;-,6100uH,J,40,34mA,TP,EL0607R	
..2	PCB	AA41-00199C	PCB-H/V MODULE;P53A,CEM-1,1L,C,1.6T,330x	S.N.A
..2	Q371	AA96-50291A	ASSY-H/S;-,-,AA62-30154B,2SC4636,-	
...3		0205-000129	GREASE-SILICON;SC102,JAPAN	S.N.A
...3		0502-000442	TR-POWER;2SC4636RB,NPN,2W,TO-220,ST,10-	
...3		6003-000333	SCREW-TAPTITE;RH,+,2S,M3,L10,ZPC(YEL),SW	S.N.A
...3		AA62-30154B	HEAT SINK-ES;-,A6063,EXTR,-,-,SILVER ANO	S.N.A
⚠ ..2	Q422	0505-000156	FET-SILICON;IRF620,N,200V,5A,0.8ohm,50W,	S.N.A
..2	R425	2003-000736	R-METAL OXIDE(S);560ohm,5%,3W,AA,TP,6x16	
..2	R485	2008-001096	R-FUSIBLE(S);3.3OHM,5%,1/2W,AC,BK,2.5X6.	
..2		AA99-20071J	ASSY-PCB SUB,AUTO; AA95-00056C ,V	S.N.A
...3	C341	2401-001914	C-AL;1uF,20%,50V,BP,TP,5x11,5	
...3	C342	2401-000962	C-AL;22uF,20%,50V,GP,TP,5x11,5	
...3	C351	2301-000175	C-FILM,PEF;15nF,5%,50V,TP,7.1x3.5x13mm,5	
...3	C352	2401-000480	C-AL;10uF,20%,50V,GP,TP,5x11,5	
...3	C353	2301-000204	C-FILM,PEF;2.7nF,5%,50V,TP,7.4x3.9x13mm,	
...3	C354	2301-000261	C-FILM,PEF;4.7nF,5%,100V,TP,10.5x12.5x6.	
...3	C355	2401-000480	C-AL;10uF,20%,50V,GP,TP,5x11,5	
...3	C356	2201-000180	C-CERAMIC,DISC;10nF,10%,50V,Y5V,TP,7x3,5	
...3	C357	2401-001989	C-AL;4.7uF,20%,50V,BP,TP,5x11,5	
...3	C358	2401-000471	C-AL;10uF,20%,50V,BP,TP,5x11,5mm	
...3	C360	2305-000289	C-FILM,MPEF;220nF,5%,63V,TP,-,5mm	
...3	C361	2306-000122	C-FILM,MPPF;100nF,5%,50V,TP,7.3x4.0x5.0m	
...3	C362	2305-000149	C-FILM,MPEF;100nF,5%,100V,TP,12x12.5x6.5	
...3	C371	2401-000302	C-AL;100uF,20%,25V,GP,TP,6.3x11,5	
...3	C372	2401-000480	C-AL;10uF,20%,50V,GP,TP,5x11,5	
...3	C373	2401-000302	C-AL;100uF,20%,25V,GP,TP,6.3x11,5	
...3	C374	2401-001621	C-AL;6.8uF,20%,450V,GP,TP,13x20,5	
...3	C405	2201-000558	C-CERAMIC,DISC;0.47nF,10%,50V,Y5P,TP,5x3	
...3	C406	2201-000370	C-CERAMIC,DISC;0.22nF,10%,50V,Y5P,TP,4x3	
...3	C421	2401-000302	C-AL;100uF,20%,25V,GP,TP,6.3x11,5	
...3	C429	2305-000704	C-FILM,MPEF;100nF,5%,250V,TP,16.5x10.3x5	
...3	C454	2303-000331	C-FILM,PPF;4.7nF,5%,630V,TP,19.5x12x7,7.	
...3	C455	2401-001527	C-AL;47uF,20%,250V,HR,TP,13x25mm,5m	
...3	C456	2201-000132	C-CERAMIC,DISC;0.1nF,10%,500V,Y5P,TP,6.5	
...3	C461	2201-000600	C-CERAMIC,DISC;0.56nF,10%,50V,Y5P,TP,5x3	
...3	C462	2301-000246	C-FILM,PEF;33nF,5%,100V,TP,7x5.0x9.5mm,5	
...3	C480	2306-000122	C-FILM,MPPF;100nF,5%,50V,TP,7.3x4.0x5.0m	
...3	C481	2401-000914	C-AL;22uF,20%,16V,GP,TP,5x11,5	
...3	C482	2305-000178	C-FILM,MPEF;10nF,5%,100V,TP,-,5mm	
...3	C484	2401-001026	C-AL;3.3UF,20%,50V,GP,TP,5X11,5	
...3	C485	2201-000146	C-CERAMIC,DISC;0.1nF,5%,50V,SL,TP,5x3.5,	
...3	C486	2201-000146	C-CERAMIC,DISC;0.1nF,5%,50V,SL,TP,5x3.5,	
...3	C487	2401-001026	C-AL;3.3UF,20%,50V,GP,TP,5X11,5	
...3	C488	2401-002144	C-AL;47uF,20%,16V,GP,TP,5x11,5	
...3	C489	2401-001840	C-AL;100uF,20%,16V,GP,TP,6.3x11,5	
...3	C490	2201-000119	C-CERAMIC,DISC;100nF,+80-20%,50V,Y5V,TP,	
...3	C492	2401-002144	C-AL;47uF,20%,16V,GP,TP,5x11,5	
...3	C493	2201-000119	C-CERAMIC,DISC;100nF,+80-20%,50V,Y5V,TP,	
...3	C494	2201-000471	C-CERAMIC,DISC;0.33nF,10%,50V,Y5P,TP,4x3	
...3	C495	2301-000192	C-FILM,PEF;1nF,5%,50V,TP,5.3x10mm,5mm	
...3	C496	2401-000832	C-AL;220uF,20%,25V,GP,TP,8x11.5,5	
...3	D342	0401-000005	DIODE-SWITCHING;1N4148,100V,200MA,DO-35,	
...3	D343	0401-000005	DIODE-SWITCHING;1N4148,100V,200MA,DO-35,	
...3	D344	0401-000005	DIODE-SWITCHING;1N4148,100V,200MA,DO-35,	
...3	D345	0403-001325	DIODE-ZENER;MTZJ15C,14.35-15.09V,500mW,D	
...3	D352	0401-000005	DIODE-SWITCHING;1N4148,100V,200MA,DO-35,	
...3	D353	0401-000005	DIODE-SWITCHING;1N4148,100V,200MA,DO-35,	
...3	D355	0402-000546	DIODE-RECTIFIER;TVR10G,400V,1.0A,DO-41,T	
...3	D363	0401-000005	DIODE-SWITCHING;1N4148,100V,200MA,DO-35,	
...3	D364	0401-000005	DIODE-SWITCHING;1N4148,100V,200MA,DO-35,	
...3	D371	0401-000005	DIODE-SWITCHING;1N4148,100V,200MA,DO-35,	
...3	D372	0401-000005	DIODE-SWITCHING;1N4148,100V,200MA,DO-35,	
...3	D373	0402-000243	DIODE-RECTIFIER;RC2-V1,2000V,0.2A,DO-201	
...3	D384	0402-000132	DIODE-RECTIFIER;1N4004,400V,1A,DO-41,TP	
...3	D385	0401-000005	DIODE-SWITCHING;1N4148,100V,200MA,DO-35,	
...3	D386	0403-001316	DIODE-ZENER;MTZJ3.0A,2.85-3.07V,500mW,DO	
...3	D395	0403-001319	DIODE-ZENER;MTZJ4.7C,4.68-4.93V,500mW,DO	
⚠ ...3	D442	0401-000005	DIODE-SWITCHING;1N4148,100V,200MA,DO-35,	
⚠ ...3	D443	0401-000005	DIODE-SWITCHING;1N4148,100V,200MA,DO-35,	
⚠ ...3	D451	0402-000534	DIODE-RECTIFIER;RG10V,400V,1.2A,DO-201,T	
⚠ ...3	D456	0401-000005	DIODE-SWITCHING;1N4148,100V,200MA,DO-35,	
⚠ ...3	D457	0403-000714	DIODE-ZENER;MTZJ3.3B,3.3V,3.32-3.53V,500	
⚠ ...3	D474	0403-000734	DIODE-ZENER;TZP15B,15V,14.7-16.5V,1W,DO-	
⚠ ...3	D475	0401-000005	DIODE-SWITCHING;1N4148,100V,200MA,DO-35,	
⚠ ...3	D476	0401-000005	DIODE-SWITCHING;1N4148,100V,200MA,DO-35,	
⚠ ...3	D477	0401-000005	DIODE-SWITCHING;1N4148,100V,200MA,DO-35,	
⚠ ...3	D478	0401-000005	DIODE-SWITCHING;1N4148,100V,200MA,DO-35,	
⚠ ...3	D479	0401-000005	DIODE-SWITCHING;1N4148,100V,200MA,DO-35,	
⚠ ...3	D480	0402-000132	DIODE-RECTIFIER;1N4004,400V,1A,DO-41,TP	
⚠ ...3	D483	0403-000720	DIODE-ZENER;MTZJ9.1B,9.1V,8.57-9.01V,500	
⚠ ...3	D484	0402-000132	DIODE-RECTIFIER;1N4004,400V,1A,DO-41,TP	
⚠ ...3	D491	0401-000005	DIODE-SWITCHING;1N4148,100V,200MA,DO-35,	
⚠ ...3	D492	0403-000716	DIODE-ZENER;MTZJ4.7B,4.7V,4.55-4.8V,500m	
⚠ ...3	D493	0403-001325	DIODE-ZENER;MTZJ15C,14.35-15.09V,500mW,D	
⚠ ...3	IC481	1203-001217	IC-POSI.ADJUST REG.;431,TO-92,3P,4.58MIL	
...3	L341	2701-000116	INDUCTOR-AXIAL;10uH,10%,4.2x9.8mm	
...3	Q342	0501-000389	TR-SMALL SIGNAL;KSC815,NPN,400mW,TO-92,T	
...3	Q343	0501-000389	TR-SMALL SIGNAL;KSC815,NPN,400mW,TO-92,T	
...3	Q344	0501-000283	TR-SMALL SIGNAL;KSA539,PNP,400mW,TO-92,T	
...3	Q350	0501-000389	TR-SMALL SIGNAL;KSC815,NPN,400mW,TO-92,T	
...3	Q351	0501-000283	TR-SMALL SIGNAL;KSA539,PNP,400mW,TO-92,T	
...3	Q352	0501-000389	TR-SMALL SIGNAL;KSC815,NPN,400mW,TO-92,T	
...3	Q353	0501-000389	TR-SMALL SIGNAL;KSC815,NPN,400mW,TO-92,T	
...3	Q354	0501-000283	TR-SMALL SIGNAL;KSA539,PNP,400mW,TO-92,T	
...3	Q355	0501-000366	TR-SMALL SIGNAL;KSC2330-Y,NPN,1W,TO-92L,	
...3	Q381	0501-000389	TR-SMALL SIGNAL;KSC815,NPN,400mW,TO-92,T	
...3	Q382	0501-000389	TR-SMALL SIGNAL;KSC815,NPN,400mW,TO-92,T	
⚠ ...3	Q401	0501-000389	TR-SMALL SIGNAL;KSC815,NPN,400mW,TO-92,T	
⚠ ...3	Q402	0501-000389	TR-SMALL SIGNAL;KSC815,NPN,400mW,TO-92,T	
⚠ ...3	Q421	0501-000389	TR-SMALL SIGNAL;KSC815,NPN,400mW,TO-92,T	
⚠ ...3	Q451	0501-000389	TR-SMALL SIGNAL;KSC815,NPN,400mW,TO-92,T	
⚠ ...3	Q452	0501-000389	TR-SMALL SIGNAL;KSC815,NPN,400mW,TO-92,T	
⚠ ...3	Q453	0501-000389	TR-SMALL SIGNAL;KSC815,NPN,400mW,TO-92,T	
⚠ ...3	Q454	0501-000283	TR-SMALL SIGNAL;KSA539,PNP,400mW,TO-92,T	
⚠ ...3	Q461	0501-000389	TR-SMALL SIGNAL;KSC815,NPN,400mW,TO-92,T	
⚠ ...3	Q471	0501-000389	TR-SMALL SIGNAL;KSC815,NPN,400mW,TO-92,T	
⚠ ...3	Q473	0501-000389	TR-SMALL SIGNAL;KSC815,NPN,400mW,TO-92,T	
⚠ ...3	Q481	0501-000389	TR-SMALL SIGNAL;KSC815,NPN,400mW,TO-92,T	
⚠ ...3	Q482	0501-000283	TR-SMALL SIGNAL;KSA539,PNP,400mW,TO-92,T	
⚠ ...3	Q483	0501-000283	TR-SMALL SIGNAL;KSA539,PNP,400mW,TO-92,T	
⚠ ...3	Q491	0501-000389	TR-SMALL SIGNAL;KSC815,NPN,400mW,TO-92,T	
...3	R339	2001-000613	R-CARBON;3.9KOHM,5%,1/8W,AA,TP,1.8X3.2M	
...3	R340	2001-000241	R-CARBON;1.5KOHM,5%,1/8W,AA,TP,1.8X3.2M	
...3	R341	2001-000429	R-CARBON;1KOHM,5%,1/8W,AA,TP,1.8X3.2MM	
...3	R342	2001-000273	R-CARBON;100KOHM,5%,1/8W,AA,TP,1.8X3.2M	
...3	R343	2001-000812	R-CARBON;5.6KOHM,5%,1/8W,AA,TP,1.8X3.2M	
...3	R344	2001-000890	R-CARBON;6.8KOHM,5%,1/8W,AA,TP,1.8X3.2M	
...3	R345	2001-001088	R-CARBON(S);1KOHM,5%,1/2W,AA,TP,2.4X6.4M	
...3	R345A	2001-000429	R-CARBON;1KOHM,5%,1/8W,AA,TP,1.8X3.2MM	
...3	R346	2001-000290	R-CARBON;10KOHM,5%,1/8W,AA,TP,1.8X3.2MM	
...3	R347	2001-001088	R-CARBON(S);1KOHM,5%,1/2W,AA,TP,2.4X6.4M	
...3	R348	2001-000591	R-CARBON;3.3KOHM,5%,1/8W,AA,TP,1.8X3.2M	
...3	R349	2001-000252	R-CARBON;1.6KOHM,5%,1/8W,AA,TP,1.8X3.2M	
...3	R351	2001-001178	R-CARBON(S);680OHM,5%,1/2W,AA,TP,2.4X6.4	
...3	R352	2001-000003	R-CARBON;330ohm,5%,1/8W,AA,TP,1.8x3.2mm	
...3	R353	2001-000890	R-CARBON;6.8KOHM,5%,1/8W,AA,TP,1.8X3.2M	
...3	R354	2001-000890	R-CARBON;6.8KOHM,5%,1/8W,AA,TP,1.8X3.2M	
...3	R355	2001-000006	R-CARBON;2.4KOHM,5%,1/8W,AA,TP,1.8X3.2M	
...3	R357	2001-000613	R-CARBON;3.9KOHM,5%,1/8W,AA,TP,1.8X3.2M	
...3	R358	2001-000008	R-CARBON;15KOHM,5%,1/8W,AA,TP,1.8X3.2MM	
...3	R359	2001-000766	R-CARBON;43KOHM,5%,1/8W,AA,TP,1.8X3.2MM	
...3	R360	2001-000857	R-CARBON;560OHM,5%,1/8W,AA,TP,1.8X3.2MM	

Level	Loc. No.	Code No.	Description ; Specification	Remark
...3	R361	2001-001191	R-CARBON(S);820KOHM,5%,1/2W,AA,TP,2.4X6.	
...3	R362	2001-000660	R-CARBON;33KOHM,5%,1/8W,AA,TP,1.8X3.2MM	
...3	R363	2001-000723	R-CARBON;4.3KOHM,5%,1/8W,AA,TP,1.8X3.2M	
...3	R364	2001-000938	R-CARBON;68OHM,5%,1/8W,AA,TP,1.8X3.2MM	
...3	R365	2001-001120	R-CARBON(S);3.3OHM,5%,1/2W,AA,TP,2.4X6.4	
...3	R366	2001-000109	R-CARBON(S);470OHM,5%,1/2W,AA,TP,2.4X6.4	
...3	R367	2001-001065	R-CARBON(S);110KOHM,5%,1/2W,AA,TP,2.4X6.	
...3	R368	2001-001065	R-CARBON(S);110KOHM,5%,1/2W,AA,TP,2.4X6.	
...3	R369	2001-001065	R-CARBON(S);110KOHM,5%,1/2W,AA,TP,2.4X6.	
...3	R369A	2001-001065	R-CARBON(S);110KOHM,5%,1/2W,AA,TP,2.4X6.	
...3	R370	2001-001065	R-CARBON(S);110KOHM,5%,1/2W,AA,TP,2.4X6.	
...3	R371	2001-001065	R-CARBON(S);110KOHM,5%,1/2W,AA,TP,2.4X6.	
...3	R372	2001-001110	R-CARBON(S);240KOHM,5%,1/2W,AA,TP,2.4X6.	
...3	R373	2001-001110	R-CARBON(S);240KOHM,5%,1/2W,AA,TP,2.4X6.	
...3	R374	2001-001110	R-CARBON(S);240KOHM,5%,1/2W,AA,TP,2.4X6.	
...3	R375	2001-001113	R-CARBON(S);270KOHM,5%,1/2W,AA,TP,2.4X6.	
...3	R376	2001-000613	R-CARBON;3.9KOHM,5%,1/8W,AA,TP,1.8X3.2M	
...3	R377	2004-001892	R-METAL(S);162Kohm,1%,1/2W,AA,TP,2.5x6.5	
...3	R378	2004-001892	R-METAL(S);162Kohm,1%,1/2W,AA,TP,2.5x6.5	
...3	R379	2004-001892	R-METAL(S);162Kohm,1%,1/2W,AA,TP,2.5x6.5	
...3	R380	2004-001892	R-METAL(S);162Kohm,1%,1/2W,AA,TP,2.5x6.5	
...3	R381	2001-001088	R-CARBON(S);1KOHM,5%,1/2W,AA,TP,2.4X6.4M	
...3	R384	2001-001150	R-CARBON(S);470KOHM,5%,1/2W,AA,TP,2.4X6.	
...3	R385	2001-000577	R-CARBON;2KOHM,5%,1/8W,AA,TP,1.8X3.2MM	
...3	R386	2001-000786	R-CARBON;47KOHM,5%,1/8W,AA,TP,1.8X3.2MM	
...3	R387	2001-000009	R-CARBON;20KOHM,5%,1/8W,AA,TP,1.8X3.2MM	
...3	R388	2001-000522	R-CARBON;22KOHM,5%,1/8W,AA,TP,1.8X3.2MM	
...3	R389	2001-000577	R-CARBON;2KOHM,5%,1/8W,AA,TP,1.8X3.2MM	
...3	R395	2001-000734	R-CARBON;4.7KOHM,5%,1/8W,AA,TP,1.8X3.2M	
...3	R397	2001-000429	R-CARBON;1KOHM,5%,1/8W,AA,TP,1.8X3.2MM	
...3	R411	2001-000734	R-CARBON;4.7KOHM,5%,1/8W,AA,TP,1.8X3.2M	
...3	R412	2001-001088	R-CARBON(S);1KOHM,5%,1/2W,AA,TP,2.4X6.4M	
...3	R413	2001-000515	R-CARBON;220OHM,5%,1/8W,AA,TP,1.8X3.2MM	
...3	R414	2001-000290	R-CARBON;10KOHM,5%,1/8W,AA,TP,1.8X3.2MM	
...3	R415	2001-000734	R-CARBON;4.7KOHM,5%,1/8W,AA,TP,1.8X3.2M	
...3	R416	2001-000006	R-CARBON;2.4KOHM,5%,1/8W,AA,TP,1.8X3.2M	
...3	R420	2001-000281	R-CARBON;100OHM,5%,1/8W,AA,TP,1.8X3.2MM	
...3	R421	2003-002159	R-METAL OXIDE;150OHM,5%,1W,AG,TP,4.3X12M	
...3	R422	2001-000028	R-CARBON(S);100OHM,5%,1/2W,AA,TP,2.4X6.4	
...3	R423	2001-000613	R-CARBON;3.9KOHM,5%,1/8W,AA,TP,1.8X3.2M	
...3	R437	2008-001087	R-FUSIBLE(S);1.8ohm,5%,2W,AG,TP,3.9x12mm	
...3	R438	2001-000085	R-CARBON(S);100KOHM,5%,1/2W,AA,TP,2.4X6.	
...3	R439	2001-000085	R-CARBON(S);100KOHM,5%,1/2W,AA,TP,2.4X6.	
...3	R442	2008-000254	R-FUSIBLE(S);0.68ohm,5%,2W,AF,TP,3.9x10m	
...3	R442A	2008-000254	R-FUSIBLE(S);0.68ohm,5%,2W,AF,TP,3.9x10m	
...3	R443	2003-002156	R-METAL OXIDE;560OHM,5%,2W,AG,TP,6X16MM	
...3	R443A	2003-002156	R-METAL OXIDE;560OHM,5%,2W,AG,TP,6X16MM	
...3	R445	2001-000258	R-CARBON;1.8KOHM,5%,1/8W,AA,TP,1.8X3.2M	
...3	R446	2001-000522	R-CARBON;22KOHM,5%,1/8W,AA,TP,1.8X3.2MM	
...3	R447	2001-000812	R-CARBON;5.6KOHM,5%,1/8W,AA,TP,1.8X3.2M	
...3	R448	2001-000411	R-CARBON;18KOHM,5%,1/8W,AA,TP,1.8X3.2MM	
...3	R449	2001-000660	R-CARBON;33KOHM,5%,1/8W,AA,TP,1.8X3.2MM	
...3	R450	2001-000290	R-CARBON;10KOHM,5%,1/8W,AA,TP,1.8X3.2MM	
...3	R451	2001-000812	R-CARBON;5.6KOHM,5%,1/8W,AA,TP,1.8X3.2M	
...3	R452	2001-000241	R-CARBON;1.5KOHM,5%,1/8W,AA,TP,1.8X3.2M	
...3	R454	2001-000761	R-CARBON;430OHM,5%,1/8W,AA,TP,1.8X3.2MM	
...3	R455	2001-000761	R-CARBON;430OHM,5%,1/8W,AA,TP,1.8X3.2MM	
...3	R456	2001-000761	R-CARBON;430OHM,5%,1/8W,AA,TP,1.8X3.2MM	
...3	R458	2001-000577	R-CARBON;2KOHM,5%,1/8W,AA,TP,1.8X3.2MM	
...3	R459	2001-001192	R-CARBON(S);820OHM,5%,1/2W,AA,TP,2.4X6.4	
...3	R460	2003-002044	R-METAL OXIDE(S);100ohm,5%,1W,AF,TP,2.5x	
...3	R461	2001-000613	R-CARBON;3.9KOHM,5%,1/8W,AA,TP,1.8X3.2M	
...3	R464	2001-000734	R-CARBON;4.7KOHM,5%,1/8W,AA,TP,1.8X3.2M	
...3	R471	2001-001146	R-CARBON(S);4.7OHM,5%,1/2W,AA,TP,2.4X6.4	
...3	R472	2001-000800	R-CARBON;5.1KOHM,5%,1/8W,AA,TP,1.8X3.2M	
...3	R473	2001-000800	R-CARBON;5.1KOHM,5%,1/8W,AA,TP,1.8X3.2M	
...3	R474	2001-000009	R-CARBON;20KOHM,5%,1/8W,AA,TP,1.8X3.2MM	
...3	R474A	2001-000508	R-CARBON;220KOHM,5%,1/8W,AA,TP,1.8X3.2M	
...3	R475	2004-001023	R-METAL;5.6Kohm,1%,1/8W,AA,TP,1.8x3.2m	
...3	R475B	2001-000734	R-CARBON;4.7KOHM,5%,1/8W,AA,TP,1.8X3.2M	
...3	R477	2001-000429	R-CARBON;1KOHM,5%,1/8W,AA,TP,1.8X3.2MM	
...3	R479	2001-000005	R-CARBON;390ohm,5%,1/8W,AA,TP,1.8x3.2mm	
...3	R480	2001-000449	R-CARBON;2.2KOHM,5%,1/8W,AA,TP,1.8X3.2M	
...3	R481	2001-000290	R-CARBON;10KOHM,5%,1/8W,AA,TP,1.8X3.2MM	
...3	R482	2001-001031	R-CARBON;91KOHM,5%,1/8W,AA,TP,1.8X3.2MM	
...3	R483	2001-000429	R-CARBON;1KOHM,5%,1/8W,AA,TP,1.8X3.2MM	
...3	R484	2001-000429	R-CARBON;1KOHM,5%,1/8W,AA,TP,1.8X3.2MM	
...3	R487	2001-000924	R-CARBON;680OHM,5%,1/8W,AA,TP,1.8X3.2MM	
...3	R489	2001-000522	R-CARBON;22KOHM,5%,1/8W,AA,TP,1.8X3.2MM	
...3	R490	2001-000723	R-CARBON;4.3KOHM,5%,1/8W,AA,TP,1.8X3.2M	
...3	R491	2001-001178	R-CARBON(S);680OHM,5%,1/2W,AA,TP,2.4X6.4	
...3	R492	2001-000591	R-CARBON;3.3KOHM,5%,1/8W,AA,TP,1.8X3.2M	
...3	R493	2001-000429	R-CARBON;1KOHM,5%,1/8W,AA,TP,1.8X3.2MM	
...3	R494	2001-000066	R-CARBON(S);10KOHM,5%,1/2W,AA,TP,2.4X6.4	
...3	R495	2001-000037	R-CARBON(S);330OHM,5%,1/2W,AA,TP,2.4X6.4	
...3	R496	2001-000347	R-CARBON;13KOHM,5%,1/8W,AA,TP,1.8X3.2MM	
...3	R497	2001-000003	R-CARBON;330ohm,5%,1/8W,AA,TP,1.8x3.2mm	
...3	R498	2001-001070	R-CARBON(S);120OHM,5%,1/2W,AA,TP,2.4X6.4	
..2		2001-000262	R-CARBON;1.8MOHM,5%,1/8W,AA,TP,1.8X3.2M	
..2		0202-000187	SOLDER-WIRE FLUX;-,RS60S,D1.2,63Sn/37Pb	S.N.A
..2		AA65-30105C	CLAMP-WIRE;ALL MODEL,NYLON 66,V2,NTR,5MM	S.N.A

ASSY-PCB,CONV AMP

1	*	AA95-00055L	ASSY-PCB,CONV AMP;-,SP53J5HF,J51A,-,-,-	
..2	C491	2306-000322	C-FILM,MPPF;12nF,5%,1.6KV,TP,29x20.5x13,	
..2	CN203	AA39-00115A	LEAD CONNECTOR-ASSY;,-,-,10P,-,-,-,YBNH2	
..2	CN401	AA39-00128A	LEAD CONNECTOR-ASSY;,-,-,8P,-,-,-,YBNH25	
..2	CN402	AA39-00116A	LEAD CONNECTOR-ASSY;,-,-,12P,-,-,-,YBNH2	
..2	CN802	AA39-00128A	LEAD CONNECTOR-ASSY;,-,-,8P,-,-,-,YBNH25	
⚠ ..2	ICZ101	AA96-50152C	ASSY-H/S;-,TR,AA62-30012A,KA7806A,30MM	
...3		1203-000284	IC-POSI.FIXED REG.;7806,TO-220,3P,-,PLAS	
...3		6003-000333	SCREW-TAPTITE;RH,+,2S,M3,L10,ZPC(YEL),SW	S.N.A
...3		AA62-30012A	HEAT SINK-ES;-,A6063 EXTR,-,-,T0220,-,-,	S.N.A
⚠ ..2	ICZ102	1203-000121	IC-NEGA.FIXED REG.;7906,TO-220,3P,-,PLAS	
⚠ ..2	ICZ103	AA96-00034A	ASSY-H/S;-,CONVERGENCE,AA62-30173D,STK3	
...3		0205-000129	GREASE-SILICON;SC102,JAPAN	S.N.A
...3		1201-001225	IC-VIDEO AMP;392,SIP,22P,-,THREE,-,PLAST	
...3		6003-001021	SCREW-TAPTITE;RH,+,B,M3,L15,ZPC(YEL),SWR	S.N.A
...3		AA62-30173D	HEAT SINK-ES;-,-,T1.0,WHITE,SCREW-HOLE(2	S.N.A
⚠ ..2	ICZ104	AA96-00034A	ASSY-H/S;-,CONVERGENCE,AA62-30173D,STK3	
..2	PCB	AA41-00135D	PCB-CONVERGENCE AMP;P51A,1L,CEM-1,330x24	S.N.A
..2	SG303	4715-001050	SURGE ABSORBER;2.4kV,20%,1500A,-,DISC-RA	
..2	VR472	2103-001086	VR-SEMI;100KOHM,25%,0.3W,TOP	
..2		0202-000187	SOLDER-WIRE FLUX;-,RS60S,D1.2,63Sn/37Pb	S.N.A
..2		AA99-20071E	ASSY-PCB SUB,AUTO; AA95-00055L ,V	S.N.A
...3	CN403	3711-002643	CONNECTOR-HEADER;BOX,4P,1R,2.5MM,STRAIGH	
...3	CZ101	2401-001429	C-AL;470uF,20%,50V,GP,TP,13x20,5	
...3	CZ102	2401-001429	C-AL;470uF,20%,50V,GP,TP,13x20,5	
...3	CZ103	2401-000689	C-AL;2200uF,20%,16V,GP,TP,13x25,5	
...3	CZ105	2401-000689	C-AL;2200uF,20%,16V,GP,TP,13x25,5	
...3	CZ106	2201-000180	C-CERAMIC,DISC;10nF,10%,50V,Y5V,TP,7x3,5	
...3	CZ107	2201-000180	C-CERAMIC,DISC;10nF,10%,50V,Y5V,TP,7x3,5	
...3	CZ108	2201-000499	C-CERAMIC,DISC;0.39nF,5%,50V,SL,TP,8.5x3	
...3	CZ109	2201-000499	C-CERAMIC,DISC;0.39nF,5%,50V,SL,TP,8.5x3	
...3	CZ110	2201-000499	C-CERAMIC,DISC;0.39nF,5%,50V,SL,TP,8.5x3	
...3	CZ111	2201-000976	C-CERAMIC,DISC;0.022nF,5%,50V,NP0,TP,5x3	
...3	CZ112	2201-000863	C-CERAMIC,DISC;0.68nF,10%,50V,Y5P,TP,5x3	
...3	CZ113	2201-000976	C-CERAMIC,DISC;0.022nF,5%,50V,NP0,TP,5x3	
...3	CZ114	2201-000863	C-CERAMIC,DISC;0.68nF,10%,50V,Y5P,TP,5x3	
...3	CZ115	2201-000976	C-CERAMIC,DISC;0.022nF,5%,50V,NP0,TP,5x3	
...3	CZ116	2201-000863	C-CERAMIC,DISC;0.68nF,10%,50V,Y5P,TP,5x3	
...3	CZ117	2201-000327	C-CERAMIC,DISC;2.2nF,10%,50V,Y5V,TP,6.5x	
...3	CZ118	2201-000327	C-CERAMIC,DISC;2.2nF,10%,50V,Y5V,TP,6.5x	
...3	CZ119	2201-000119	C-CERAMIC,DISC;100nF,+80-20%,50V,Y5V,TP,	
...3	CZ120	2201-000119	C-CERAMIC,DISC;100nF,+80-20%,50V,Y5V,TP,	
...3	CZ121	2201-000764	C-CERAMIC,DISC;0.082nF,5%,50V,NP0,TP,8x3	
...3	CZ126	2201-000499	C-CERAMIC,DISC;0.39nF,5%,50V,SL,TP,8.5x3	
...3	CZ127	2201-000499	C-CERAMIC,DISC;0.39nF,5%,50V,SL,TP,8.5x3	
...3	CZ128	2201-000499	C-CERAMIC,DISC;0.39nF,5%,50V,SL,TP,8.5x3	
...3	CZ132	2201-000976	C-CERAMIC,DISC;0.022nF,5%,50V,NP0,TP,5x3	
...3	CZ133	2201-000863	C-CERAMIC,DISC;0.68nF,10%,50V,Y5P,TP,5x3	
...3	CZ134	2201-000976	C-CERAMIC,DISC;0.022nF,5%,50V,NP0,TP,5x3	
...3	CZ135	2201-000863	C-CERAMIC,DISC;0.68nF,10%,50V,Y5P,TP,5x3	
...3	CZ136	2201-000976	C-CERAMIC,DISC;0.022nF,5%,50V,NP0,TP,5x3	
...3	CZ137	2201-000863	C-CERAMIC,DISC;0.68nF,10%,50V,Y5P,TP,5x3	
...3	CZ138	2201-000327	C-CERAMIC,DISC;2.2nF,10%,50V,Y5V,TP,6.5x	
...3	CZ139	2201-000327	C-CERAMIC,DISC;2.2nF,10%,50V,Y5V,TP,6.5x	
...3	CZ144	2401-001840	C-AL;100uF,20%,16V,GP,TP,6.3x11,5	
...3	CZ145	2201-000119	C-CERAMIC,DISC;100nF,+80-20%,50V,Y5V,TP,	

Level	Loc. No.	Code No.	Description ; Specification	Remark
...3	CZ146	2401-001840	C-AL;100uF,20%,16V,GP,TP,6.3x11,5	
...3	CZ147	2201-000119	C-CERAMIC,DISC;100nF,+80-20%,50V,Y5V,TP,	
...3	CZ151	2202-000796	C-CERAMIC,MLC-AXIAL;1NF,10%,50V,Y5P,TP,3	
...3	CZ152	2202-000796	C-CERAMIC,MLC-AXIAL;1NF,10%,50V,Y5P,TP,3	
...3	CZ153	2202-000796	C-CERAMIC,MLC-AXIAL;1NF,10%,50V,Y5P,TP,3	
...3	CZ154	2202-000796	C-CERAMIC,MLC-AXIAL;1NF,10%,50V,Y5P,TP,3	
...3	CZ155	2202-000796	C-CERAMIC,MLC-AXIAL;1NF,10%,50V,Y5P,TP,3	
...3	CZ156	2202-000796	C-CERAMIC,MLC-AXIAL;1NF,10%,50V,Y5P,TP,3	
...3	D453	0402-001286	DIODE-RECTIFIER;RP1H,2000V,.1A,-,TP	
...3	D501	0401-000005	DIODE-SWITCHING;1N4148,100V,200MA,DO-35,	
...3	DZ120	0403-000510	DIODE-ZENER;MTZJ6.2B,6.2V,5.96-6.27V,500	
...3	DZ121	0403-000510	DIODE-ZENER;MTZJ6.2B,6.2V,5.96-6.27V,500	
...3	DZ122	0403-000510	DIODE-ZENER;MTZJ6.2B,6.2V,5.96-6.27V,500	
...3	DZ126	0402-000546	DIODE-RECTIFIER;TVR10G,400V,1.0A,DO-41,T	
...3	DZ127	0402-000546	DIODE-RECTIFIER;TVR10G,400V,1.0A,DO-41,T	
...3	DZ128	0403-000510	DIODE-ZENER;MTZJ6.2B,6.2V,5.96-6.27V,500	
...3	DZ129	0403-000510	DIODE-ZENER;MTZJ6.2B,6.2V,5.96-6.27V,500	
...3	DZ130	0403-000510	DIODE-ZENER;MTZJ6.2B,6.2V,5.96-6.27V,500	
...3	DZ131	0403-000510	DIODE-ZENER;MTZJ6.2B,6.2V,5.96-6.27V,500	
...3	LZ101	2701-001030	INDUCTOR-AXIAL;43uH,10%,5x14mm	
...3	LZ102	2701-001030	INDUCTOR-AXIAL;43uH,10%,5x14mm	
...3	LZ103	2701-000142	INDUCTOR-AXIAL;1uH,10%,2.5x3.4mm	
...3	LZ104	2701-000142	INDUCTOR-AXIAL;1uH,10%,2.5x3.4mm	
...3	LZ107	2701-000142	INDUCTOR-AXIAL;1uH,10%,2.5x3.4mm	
...3	LZ108	2701-000142	INDUCTOR-AXIAL;1uH,10%,2.5x3.4mm	
...3	LZ109	2701-000142	INDUCTOR-AXIAL;1uH,10%,2.5x3.4mm	
...3	LZ110	2701-000142	INDUCTOR-AXIAL;1uH,10%,2.5x3.4mm	
...3	LZ111	2701-000142	INDUCTOR-AXIAL;1uH,10%,2.5x3.4mm	
...3	LZ112	2701-000142	INDUCTOR-AXIAL;1uH,10%,2.5x3.4mm	
...3	R382	2002-001006	R-COMPOSITION;4.7Kohm,5%,1/2W,AA,TP,3.7x	
...3	R476	2004-004046	R-METAL(S);430Kohm,1%,1/2W,AA,TP,2.5x6.5	
...3	R476A	2004-004001	R-METAL(S);180Kohm,1%,1/2W,AA,TP,2.5x6.5	
...3	R476B	2004-001892	R-METAL(S);162Kohm,1%,1/2W,AA,TP,2.5x6.5	
...3	R476C	2004-004046	R-METAL(S);430Kohm,1%,1/2W,AA,TP,2.5x6.5	
...3	R478	2004-001892	R-METAL(S);162Kohm,1%,1/2W,AA,TP,2.5x6.5	
...3	R501	2004-001376	R-METAL(S);11Kohm,1%,1/2W,AA,TP,2.4x6.4m	
...3	R502	2004-004366	R-METAL(S);1.3Kohm,1%,1/2W,AA,TP,2.5x6.5	
...3	RFZ19	2008-000261	R-FUSIBLE(S);150ohm,5%,1W,AF,TP,3.9x10mm	
...3	RFZ20	2008-000261	R-FUSIBLE(S);150ohm,5%,1W,AF,TP,3.9x10mm	
...3	RFZ21	2008-000261	R-FUSIBLE(S);150ohm,5%,1W,AF,TP,3.9x10mm	
...3	RFZ22	2008-000261	R-FUSIBLE(S);150ohm,5%,1W,AF,TP,3.9x10mm	
...3	RFZ50	2008-000261	R-FUSIBLE(S);150ohm,5%,1W,AF,TP,3.9x10mm	
...3	RFZ51	2008-000261	R-FUSIBLE(S);150ohm,5%,1W,AF,TP,3.9x10mm	
...3	RFZ52	2008-000261	R-FUSIBLE(S);150ohm,5%,1W,AF,TP,3.9x10mm	
...3	RFZ53	2008-000261	R-FUSIBLE(S);150ohm,5%,1W,AF,TP,3.9x10mm	
...3	RZ101	2001-000429	R-CARBON;1KOHM,5%,1/8W,AA,TP,1.8X3.2MM	
...3	RZ102	2001-000429	R-CARBON;1KOHM,5%,1/8W,AA,TP,1.8X3.2MM	
...3	RZ103	2001-000429	R-CARBON;1KOHM,5%,1/8W,AA,TP,1.8X3.2MM	
...3	RZ104	2001-001114	R-CARBON(S);270OHM,5%,1/2W,AA,TP,2.4X6.4	
...3	RZ105	2001-001114	R-CARBON(S);270OHM,5%,1/2W,AA,TP,2.4X6.4	
...3	RZ106	2001-001114	R-CARBON(S);270OHM,5%,1/2W,AA,TP,2.4X6.4	
...3	RZ107	2001-001114	R-CARBON(S);270OHM,5%,1/2W,AA,TP,2.4X6.4	
...3	RZ108	2001-001114	R-CARBON(S);270OHM,5%,1/2W,AA,TP,2.4X6.4	
...3	RZ109	2001-001114	R-CARBON(S);270OHM,5%,1/2W,AA,TP,2.4X6.4	
...3	RZ110	2001-000563	R-CARBON;27KOHM,5%,1/8W,AA,TP,1.8X3.2MM	
...3	RZ111	2001-000563	R-CARBON;27KOHM,5%,1/8W,AA,TP,1.8X3.2MM	
...3	RZ112	2001-000563	R-CARBON;27KOHM,5%,1/8W,AA,TP,1.8X3.2MM	
...3	RZ113	2001-000591	R-CARBON;3.3KOHM,5%,1/8W,AA,TP,1.8X3.2M	
...3	RZ114	2001-000857	R-CARBON;560OHM,5%,1/8W,AA,TP,1.8X3.2MM	
...3	RZ115	2001-000591	R-CARBON;3.3KOHM,5%,1/8W,AA,TP,1.8X3.2M	
...3	RZ116	2001-000857	R-CARBON;560OHM,5%,1/8W,AA,TP,1.8X3.2MM	
...3	RZ117	2001-000591	R-CARBON;3.3KOHM,5%,1/8W,AA,TP,1.8X3.2M	
...3	RZ118	2001-000857	R-CARBON;560OHM,5%,1/8W,AA,TP,1.8X3.2MM	
...3	RZ120	2001-000281	R-CARBON;100OHM,5%,1/8W,AA,TP,1.8X3.2MM	
...3	RZ121	2001-000281	R-CARBON;100OHM,5%,1/8W,AA,TP,1.8X3.2MM	
...3	RZ122	2001-000003	R-CARBON;330ohm,5%,1/8W,AA,TP,1.8x3.2mm	
...3	RZ123	2003-002148	R-METAL OXIDE;3.9OHM,2%,2W,AF,TP,3.9X10M	
...3	RZ124	2003-002148	R-METAL OXIDE;3.9OHM,2%,2W,AF,TP,3.9X10M	
...3	RZ125	2003-002148	R-METAL OXIDE;3.9OHM,2%,2W,AF,TP,3.9X10M	
...3	RZ126	2003-002148	R-METAL OXIDE;3.9OHM,2%,2W,AF,TP,3.9X10M	
...3	RZ127	2003-002148	R-METAL OXIDE;3.9OHM,2%,2W,AF,TP,3.9X10M	
...3	RZ128	2003-002148	R-METAL OXIDE;3.9OHM,2%,2W,AF,TP,3.9X10M	
...3	RZ129	2003-001024	R-METAL OXIDE(S);150ohm,5%,2W,AF,TP,3.9x	
...3	RZ129A	2003-001024	R-METAL OXIDE(S);150ohm,5%,2W,AF,TP,3.9x	
...3	RZ130	2003-001024	R-METAL OXIDE(S);150ohm,5%,2W,AF,TP,3.9x	
...3	RZ130A	2003-001024	R-METAL OXIDE(S);150ohm,5%,2W,AF,TP,3.9x	
...3	RZ131	2003-002157	R-METAL OXIDE;220OHM,5%,2W,AG,TP,6X16MM	
...3	RZ131A	2003-002157	R-METAL OXIDE;220OHM,5%,2W,AG,TP,6X16MM	
...3	RZ132	2003-002157	R-METAL OXIDE;220OHM,5%,2W,AG,TP,6X16MM	
...3	RZ132A	2003-002157	R-METAL OXIDE;220OHM,5%,2W,AG,TP,6X16MM	
...3	RZ133	2001-000563	R-CARBON;27KOHM,5%,1/8W,AA,TP,1.8X3.2MM	
...3	RZ134	2001-000563	R-CARBON;27KOHM,5%,1/8W,AA,TP,1.8X3.2MM	
...3	RZ135	2001-000563	R-CARBON;27KOHM,5%,1/8W,AA,TP,1.8X3.2MM	
...3	RZ136	2001-000591	R-CARBON;3.3KOHM,5%,1/8W,AA,TP,1.8X3.2M	
...3	RZ137	2001-000857	R-CARBON;560OHM,5%,1/8W,AA,TP,1.8X3.2MM	
...3	RZ138	2001-000591	R-CARBON;3.3KOHM,5%,1/8W,AA,TP,1.8X3.2M	
...3	RZ139	2001-000857	R-CARBON;560OHM,5%,1/8W,AA,TP,1.8X3.2MM	
...3	RZ140	2001-000591	R-CARBON;3.3KOHM,5%,1/8W,AA,TP,1.8X3.2M	
...3	RZ141	2001-000857	R-CARBON;560OHM,5%,1/8W,AA,TP,1.8X3.2MM	
...3	RZ142	2003-002148	R-METAL OXIDE;3.9OHM,2%,2W,AF,TP,3.9X10M	
...3	RZ143	2003-002148	R-METAL OXIDE;3.9OHM,2%,2W,AF,TP,3.9X10M	
...3	RZ144	2003-002148	R-METAL OXIDE;3.9OHM,2%,2W,AF,TP,3.9X10M	
...3	RZ145	2003-002148	R-METAL OXIDE;3.9OHM,2%,2W,AF,TP,3.9X10M	
...3	RZ146	2003-002148	R-METAL OXIDE;3.9OHM,2%,2W,AF,TP,3.9X10M	
...3	RZ147	2003-002148	R-METAL OXIDE;3.9OHM,2%,2W,AF,TP,3.9X10M	
...3	RZ148	2003-002157	R-METAL OXIDE;220OHM,5%,2W,AG,TP,6X16MM	
...3	RZ148A	2003-002157	R-METAL OXIDE;220OHM,5%,2W,AG,TP,6X16MM	
...3	RZ149	2003-001024	R-METAL OXIDE(S);150ohm,5%,2W,AF,TP,3.9x	
...3	RZ149A	2003-001024	R-METAL OXIDE(S);150ohm,5%,2W,AF,TP,3.9x	

ASSY-PCB,TERMINAL

1	*	AA95-00219D	ASSY-PCB,TERMINAL;-,SP43J5HF,J51A,-,-,1	
..2	CNT01	3711-003630	CONNECTOR-HEADER;BOX,32P,2R,2.54mm,ANGLE	
..2	CNT02	3711-003630	CONNECTOR-HEADER;BOX,32P,2R,2.54mm,ANGLE	
..2	CNT03	3711-003601	CONNECTOR-HEADER;BOX,12P,1R,2.5mm,ANGLE,	
⚠ ..2	IC703	0904-001121	IC-I/O SUPPORT CHIP;8574,8BIT,DIP,16P,30	
⚠ ..2	IC704	1001-001022	IC-ANALOG SWITCH;TDA8601,BLANKING,DIP,16	
⚠ ..2	IC705	0801-000213	IC-CMOS LOGIC;4052,MULTIPLEXER,DIP,16P,3	
..2	JKV01	3722-000498	JACK-SCART;21P,-,SN,BLK,NO	
..2	JKV02	3722-001039	JACK-RCA;9P,3.4mm,SN,BLK,#16-22	
..2	JKV03	3722-001382	JACK-RCA;5P(9P),3.4MM,NI,R/W/G/BLUE,-	
..2	JKV04	3722-001350	JACK-RCA;7P/9P,3.4MM,NI,BLK,-	
..2	JKV05	3701-001013	CONNECTOR-DSUB;15P,3R,FEMALE,STRAIGHT,AU	
..2	JKV06	3701-001013	CONNECTOR-DSUB;15P,3R,FEMALE,STRAIGHT,AU	
..2	JKV07	3722-000544	JACK-VHS;4P,11.5mm,AG,BLK,N	
..2	RN701	2011-000160	R-NETWORK;10Kohm,5%,1/8W,A,SIP,9P,TP	
..2		AA65-30105A	CLAMP-WIRE;NYLON 66,V2,NTR,15MM,ALL MODE	S.N.A
..2		AA99-20079E	ASSY-PCB SUB,AUTO; AA95-00219D ,V	S.N.A
...3	C701	2401-002009	C-AL;100uF,20%,16V,GP,TP,6.3x7,5	
...3	C702	2203-000218	C-CERAMIC,CHIP;100nF,20%,50V,Y5V,TP,2012	
...3	C703	2401-002009	C-AL;100uF,20%,16V,GP,TP,6.3x7,5	
...3	C704	2203-000818	C-CERAMIC,CHIP;0.033nF,5%,50V,NP0,TP,201	
...3	C705	2203-000818	C-CERAMIC,CHIP;0.033nF,5%,50V,NP0,TP,201	
...3	C706	2203-000979	C-CERAMIC,CHIP;47nF,10%,50V,X7R,TP,2012	
...3	C707	2203-000979	C-CERAMIC,CHIP;47nF,10%,50V,X7R,TP,2012	
...3	C708	2203-000979	C-CERAMIC,CHIP;47nF,10%,50V,X7R,TP,2012	
...3	C709	2203-000979	C-CERAMIC,CHIP;47nF,10%,50V,X7R,TP,2012	
...3	C710	2203-000979	C-CERAMIC,CHIP;47nF,10%,50V,X7R,TP,2012	
...3	C711	2203-000979	C-CERAMIC,CHIP;47nF,10%,50V,X7R,TP,2012	
...3	C712	2203-000218	C-CERAMIC,CHIP;100nF,20%,50V,Y5V,TP,2012	
...3	C713	2203-000979	C-CERAMIC,CHIP;47nF,10%,50V,X7R,TP,2012	
...3	C714	2203-000979	C-CERAMIC,CHIP;47nF,10%,50V,X7R,TP,2012	
...3	C715	2203-000979	C-CERAMIC,CHIP;47nF,10%,50V,X7R,TP,2012	
...3	C716	2401-002009	C-AL;100uF,20%,16V,GP,TP,6.3x7,5	
...3	C717	2203-000218	C-CERAMIC,CHIP;100nF,20%,50V,Y5V,TP,2012	
...3	C718	2203-000979	C-CERAMIC,CHIP;47nF,10%,50V,X7R,TP,2012	
...3	C719	2203-000979	C-CERAMIC,CHIP;47nF,10%,50V,X7R,TP,2012	
...3	C720	2203-000979	C-CERAMIC,CHIP;47nF,10%,50V,X7R,TP,2012	
...3	C721	2203-000979	C-CERAMIC,CHIP;47nF,10%,50V,X7R,TP,2012	
...3	C722	2203-000979	C-CERAMIC,CHIP;47nF,10%,50V,X7R,TP,2012	
...3	C723	2203-000218	C-CERAMIC,CHIP;100nF,20%,50V,Y5V,TP,2012	
...3	C724	2203-000979	C-CERAMIC,CHIP;47nF,10%,50V,X7R,TP,2012	
...3	C725	2203-000218	C-CERAMIC,CHIP;100nF,20%,50V,Y5V,TP,2012	
...3	C726	2203-000218	C-CERAMIC,CHIP;100nF,20%,50V,Y5V,TP,2012	
...3	C727	2203-000979	C-CERAMIC,CHIP;47nF,10%,50V,X7R,TP,2012	
...3	C730	2401-002299	C-AL;4.7uF,20%,50V,GP,TP,5x7,5	
...3	C731	2401-002299	C-AL;4.7uF,20%,50V,GP,TP,5x7,5	
...3	C732	2203-000444	C-CERAMIC,CHIP;1nF,10%,50V,X7R,TP,2012,-	
...3	C733	2203-000444	C-CERAMIC,CHIP;1nF,10%,50V,X7R,TP,2012,-	
...3	C734	2203-000444	C-CERAMIC,CHIP;1nF,10%,50V,X7R,TP,2012,-	

Level	Loc. No.	Code No.	Description ; Specification	Remark
...3	C735	2203-000444	C-CERAMIC,CHIP;1nF,10%,50V,X7R,TP,2012,-	
...3	C736	2203-000444	C-CERAMIC,CHIP;1nF,10%,50V,X7R,TP,2012,-	
...3	C737	2203-000444	C-CERAMIC,CHIP;1nF,10%,50V,X7R,TP,2012,-	
...3	C740	2401-001840	C-AL;100uF,20%,16V,GP,TP,6.3x11,5	
...3	C741	2203-000218	C-CERAMIC,CHIP;100nF,20%,50V,Y5V,TP,2012	
...3	C742	2401-001840	C-AL;100uF,20%,16V,GP,TP,6.3x11,5	
...3	C743	2203-000218	C-CERAMIC,CHIP;100nF,20%,50V,Y5V,TP,2012	
...3	C744	2203-000575	C-CERAMIC,CHIP;220NF,10%,25V,X7R,TP,2012	
...3	C745	2203-000575	C-CERAMIC,CHIP;220NF,10%,25V,X7R,TP,2012	
...3	C746	2203-000575	C-CERAMIC,CHIP;220NF,10%,25V,X7R,TP,2012	
...3	C747	2203-000575	C-CERAMIC,CHIP;220NF,10%,25V,X7R,TP,2012	
...3	C748	2203-000575	C-CERAMIC,CHIP;220NF,10%,25V,X7R,TP,2012	
...3	C749	2203-000575	C-CERAMIC,CHIP;220NF,10%,25V,X7R,TP,2012	
...3	C760	2401-000667	C-AL;2.2uF,20%,50V,WT,TP,5x11,5	
...3	C761	2401-000667	C-AL;2.2uF,20%,50V,WT,TP,5x11,5	
...3	C762	2401-000667	C-AL;2.2uF,20%,50V,WT,TP,5x11,5	
...3	C763	2401-000667	C-AL;2.2uF,20%,50V,WT,TP,5x11,5	
...3	C764	2401-000667	C-AL;2.2uF,20%,50V,WT,TP,5x11,5	
...3	C765	2401-000667	C-AL;2.2uF,20%,50V,WT,TP,5x11,5	
...3	C766	2401-000667	C-AL;2.2uF,20%,50V,WT,TP,5x11,5	
...3	C767	2401-000667	C-AL;2.2uF,20%,50V,WT,TP,5x11,5	
...3	C768	2203-000979	C-CERAMIC,CHIP;47nF,10%,50V,X7R,TP,2012	
...3	C769	2203-000979	C-CERAMIC,CHIP;47nF,10%,50V,X7R,TP,2012	
...3	C770	2203-000683	C-CERAMIC,CHIP;0.027nF,5%,50V,NP0,TP,201	
...3	C771	2203-000683	C-CERAMIC,CHIP;0.027nF,5%,50V,NP0,TP,201	
...3	C772	2203-000683	C-CERAMIC,CHIP;0.027nF,5%,50V,NP0,TP,201	
...3	C773	2203-000239	C-CERAMIC,CHIP;0.1nF,5%,50V,NP0,TP,2012	
...3	C774	2203-000239	C-CERAMIC,CHIP;0.1nF,5%,50V,NP0,TP,2012	
...3	C775	2203-000444	C-CERAMIC,CHIP;1nF,10%,50V,X7R,TP,2012,-	
...3	C776	2203-000444	C-CERAMIC,CHIP;1nF,10%,50V,X7R,TP,2012,-	
...3	C777	2401-001496	C-AL;47uF,20%,16V,GP,TP,5x7,5	
...3	C780	2401-000360	C-AL;100uF,20%,50V,GP,TP,8x11.5,5	
...3	C782	2401-000471	C-AL;10uF,20%,50V,BP,TP,5x11,5mm	
...3	C783	2401-000471	C-AL;10uF,20%,50V,BP,TP,5x11,5mm	
...3	DZ701	0403-000314	DIODE-ZENER;RLZJ9.1B,9.1V,8.80-9.30V,400	
...3	DZ702	0403-000314	DIODE-ZENER;RLZJ9.1B,9.1V,8.80-9.30V,400	
...3	DZ703	0403-000314	DIODE-ZENER;RLZJ9.1B,9.1V,8.80-9.30V,400	
...3	DZ704	0403-001117	DIODE-ZENER;RLZ12B,5%,500mW,LL-34,TP	
...3	DZ705	0403-000620	DIODE-ZENER;RLZ5.6B,5.6V,5.45-5.73V,400m	
⚠ ...3	IC701	1001-001030	IC-VIDEO SWITCH;TDA6920X,-,SOP,28P,300MI	
⚠ ...3	IC702	1001-001030	IC-VIDEO SWITCH;TDA6920X,-,SOP,28P,300MI	
...3	J701	2007-000029	R-CHIP;0OHM,5%,1/10W,DA,TP,2012	
...3	J702	2007-000029	R-CHIP;0OHM,5%,1/10W,DA,TP,2012	
...3	L701	2702-001094	INDUCTOR-RADIAL;10uH,10%,6x4mm	
...3	L702	2702-001094	INDUCTOR-RADIAL;10uH,10%,6x4mm	
...3	L703	2702-001094	INDUCTOR-RADIAL;10uH,10%,6x4mm	
...3	L704	2702-001094	INDUCTOR-RADIAL;10uH,10%,6x4mm	
...3	L705	2702-001094	INDUCTOR-RADIAL;10uH,10%,6x4mm	
...3	L706	2702-001094	INDUCTOR-RADIAL;10uH,10%,6x4mm	
...3	L707	2702-001094	INDUCTOR-RADIAL;10uH,10%,6x4mm	
...3	L708	2702-001094	INDUCTOR-RADIAL;10uH,10%,6x4mm	
...3	L709	2702-001094	INDUCTOR-RADIAL;10uH,10%,6x4mm	
...3	L710	2702-001094	INDUCTOR-RADIAL;10uH,10%,6x4mm	
...3	L719	2702-001094	INDUCTOR-RADIAL;10uH,10%,6x4mm	
...3	L720	2702-001094	INDUCTOR-RADIAL;10uH,10%,6x4mm	
...3	L721	2702-001094	INDUCTOR-RADIAL;10uH,10%,6x4mm	
...3	L722	2702-001094	INDUCTOR-RADIAL;10uH,10%,6x4mm	
...3	L723	2702-001094	INDUCTOR-RADIAL;10uH,10%,6x4mm	
...3	L724	2702-001094	INDUCTOR-RADIAL;10uH,10%,6x4mm	
...3	L725	2702-001094	INDUCTOR-RADIAL;10uH,10%,6x4mm	
...3	L726	2702-001094	INDUCTOR-RADIAL;10uH,10%,6x4mm	
...3	PCB	AA41-00076B	PCB-AV TERMINAL;SP43J5HF,FR-4,2L,B,1.6T,	S.N.A
...3	Q701	0501-000727	TR-SMALL SIGNAL;BC848C,NPN,310mW,SOT-23,	
...3	Q702	0501-000727	TR-SMALL SIGNAL;BC848C,NPN,310mW,SOT-23,	
...3	Q703	0501-000727	TR-SMALL SIGNAL;BC848C,NPN,310mW,SOT-23,	
...3	Q704	0501-000727	TR-SMALL SIGNAL;BC848C,NPN,310mW,SOT-23,	
...3	Q705	0501-000727	TR-SMALL SIGNAL;BC848C,NPN,310mW,SOT-23,	
...3	Q706	0501-000727	TR-SMALL SIGNAL;BC848C,NPN,310mW,SOT-23,	
...3	Q707	0501-000727	TR-SMALL SIGNAL;BC848C,NPN,310mW,SOT-23,	
...3	Q708	0501-000727	TR-SMALL SIGNAL;BC848C,NPN,310mW,SOT-23,	
...3	Q709	0501-000727	TR-SMALL SIGNAL;BC848C,NPN,310mW,SOT-23,	
...3	Q710	0501-000727	TR-SMALL SIGNAL;BC848C,NPN,310mW,SOT-23,	
...3	Q711	0501-000727	TR-SMALL SIGNAL;BC848C,NPN,310mW,SOT-23,	
...3	Q712	0501-000727	TR-SMALL SIGNAL;BC848C,NPN,310mW,SOT-23,	
...3	Q713	0501-000727	TR-SMALL SIGNAL;BC848C,NPN,310mW,SOT-23,	
...3	R701	2007-000290	R-CHIP;100OHM,5%,1/10W,DA,TP,2012	

Level	Loc. No.	Code No.	Description ; Specification	Remark
...3	R702	2007-000300	R-CHIP;10KOHM,5%,1/10W,DA,TP,2012	
...3	R703	2007-000468	R-CHIP;1KOHM,5%,1/10W,DA,TP,2012	
...3	R704	2007-000511	R-CHIP;2.4KOHM,5%,1/10W,DA,TP,2012	
...3	R705	2007-001166	R-CHIP;75OHM,5%,1/10W,DA,TP,2012	
...3	R706	2007-001166	R-CHIP;75OHM,5%,1/10W,DA,TP,2012	
...3	R708	2007-000290	R-CHIP;100OHM,5%,1/10W,DA,TP,2012	
...3	R709	2007-000290	R-CHIP;100OHM,5%,1/10W,DA,TP,2012	
...3	R710	2007-000290	R-CHIP;100OHM,5%,1/10W,DA,TP,2012	
...3	R711	2007-001166	R-CHIP;75OHM,5%,1/10W,DA,TP,2012	
...3	R712	2007-000290	R-CHIP;100OHM,5%,1/10W,DA,TP,2012	
...3	R713	2007-000290	R-CHIP;100OHM,5%,1/10W,DA,TP,2012	
...3	R714	2007-000290	R-CHIP;100OHM,5%,1/10W,DA,TP,2012	
...3	R715	2007-000290	R-CHIP;100OHM,5%,1/10W,DA,TP,2012	
...3	R716	2007-000300	R-CHIP;10KOHM,5%,1/10W,DA,TP,2012	
...3	R717	2007-000401	R-CHIP;150OHM,5%,1/10W,DA,TP,2012	
...3	R718	2007-000300	R-CHIP;10KOHM,5%,1/10W,DA,TP,2012	
...3	R719	2007-000468	R-CHIP;1KOHM,5%,1/10W,DA,TP,2012	
...3	R720	2007-000511	R-CHIP;2.4KOHM,5%,1/10W,DA,TP,2012	
...3	R721	2007-000290	R-CHIP;100OHM,5%,1/10W,DA,TP,2012	
...3	R722	2007-001166	R-CHIP;75OHM,5%,1/10W,DA,TP,2012	
...3	R723	2007-000290	R-CHIP;100OHM,5%,1/10W,DA,TP,2012	
...3	R724	2007-000290	R-CHIP;100OHM,5%,1/10W,DA,TP,2012	
...3	R725	2007-001166	R-CHIP;75OHM,5%,1/10W,DA,TP,2012	
...3	R726	2007-001166	R-CHIP;75OHM,5%,1/10W,DA,TP,2012	
...3	R727	2007-001166	R-CHIP;75OHM,5%,1/10W,DA,TP,2012	
...3	R728	2007-001166	R-CHIP;75OHM,5%,1/10W,DA,TP,2012	
...3	R729	2007-001166	R-CHIP;75OHM,5%,1/10W,DA,TP,2012	
...3	R730	2007-000282	R-CHIP;100KOHM,5%,1/10W,DA,TP,2012	
...3	R731	2007-000282	R-CHIP;100KOHM,5%,1/10W,DA,TP,2012	
...3	R732	2007-000282	R-CHIP;100KOHM,5%,1/10W,DA,TP,2012	
...3	R733	2007-000282	R-CHIP;100KOHM,5%,1/10W,DA,TP,2012	
...3	R734	2007-000941	R-CHIP;47KOHM,5%,1/10W,DA,TP,2012	
...3	R735	2007-000941	R-CHIP;47KOHM,5%,1/10W,DA,TP,2012	
...3	R736	2007-001166	R-CHIP;75OHM,5%,1/10W,DA,TP,2012	
...3	R737	2007-000766	R-CHIP;330OHM,5%,1/10W,DA,TP,2012	
...3	R740	2007-000468	R-CHIP;1KOHM,5%,1/10W,DA,TP,2012	
...3	R741	2007-000468	R-CHIP;1KOHM,5%,1/10W,DA,TP,2012	
...3	R742	2007-000468	R-CHIP;1KOHM,5%,1/10W,DA,TP,2012	
...3	R743	2007-000468	R-CHIP;1KOHM,5%,1/10W,DA,TP,2012	
...3	R744	2007-000468	R-CHIP;1KOHM,5%,1/10W,DA,TP,2012	
...3	R745	2007-000468	R-CHIP;1KOHM,5%,1/10W,DA,TP,2012	
...3	R746	2007-000468	R-CHIP;1KOHM,5%,1/10W,DA,TP,2012	
...3	R748	2007-000872	R-CHIP;4.7KOHM,5%,1/10W,DA,TP,2012	
...3	R749	2007-000029	R-CHIP;0OHM,5%,1/10W,DA,TP,2012	
...3	R750	2007-000572	R-CHIP;220OHM,5%,1/10W,DA,TP,2012	
...3	R751	2007-000029	R-CHIP;0OHM,5%,1/10W,DA,TP,2012	
...3	R752	2007-000572	R-CHIP;220OHM,5%,1/10W,DA,TP,2012	
...3	R753	2007-000029	R-CHIP;0OHM,5%,1/10W,DA,TP,2012	
...3	R754	2007-000572	R-CHIP;220OHM,5%,1/10W,DA,TP,2012	
...3	R755	2007-000029	R-CHIP;0OHM,5%,1/10W,DA,TP,2012	
...3	R756	2007-000964	R-CHIP;5.1KOHM,5%,1/10W,DA,TP,2012	
...3	R757	2007-000468	R-CHIP;1KOHM,5%,1/10W,DA,TP,2012	
...3	R758	2007-000872	R-CHIP;4.7KOHM,5%,1/10W,DA,TP,2012	
...3	R759	2007-000872	R-CHIP;4.7KOHM,5%,1/10W,DA,TP,2012	
...3	R760	2007-000290	R-CHIP;100OHM,5%,1/10W,DA,TP,2012	
...3	R761	2007-000221	R-CHIP;1.2KOHM,5%,1/10W,DA,TP,2012	
...3	R762	2007-000290	R-CHIP;100OHM,5%,1/10W,DA,TP,2012	
...3	R763	2007-000290	R-CHIP;100OHM,5%,1/10W,DA,TP,2012	
...3	R764	2007-000221	R-CHIP;1.2KOHM,5%,1/10W,DA,TP,2012	
...3	R765	2007-000290	R-CHIP;100OHM,5%,1/10W,DA,TP,2012	
...3	R766	2007-000290	R-CHIP;100OHM,5%,1/10W,DA,TP,2012	
...3	R767	2007-000290	R-CHIP;100OHM,5%,1/10W,DA,TP,2012	
...3	R768	2007-000290	R-CHIP;100OHM,5%,1/10W,DA,TP,2012	
...3	R769	2007-000290	R-CHIP;100OHM,5%,1/10W,DA,TP,2012	
...3	R770	2007-000766	R-CHIP;330OHM,5%,1/10W,DA,TP,2012	
...3	R771	2007-001166	R-CHIP;75OHM,5%,1/10W,DA,TP,2012	
...3	R772	2007-001166	R-CHIP;75OHM,5%,1/10W,DA,TP,2012	
...3	R773	2007-001166	R-CHIP;75OHM,5%,1/10W,DA,TP,2012	
...3	R774	2007-001166	R-CHIP;75OHM,5%,1/10W,DA,TP,2012	
...3	R775	2007-001166	R-CHIP;75OHM,5%,1/10W,DA,TP,2012	
...3	R776	2007-001166	R-CHIP;75OHM,5%,1/10W,DA,TP,2012	
...3	R777	2007-000781	R-CHIP;33OHM,5%,1/10W,DA,TP,2012	
...3	R778	2007-000781	R-CHIP;33OHM,5%,1/10W,DA,TP,2012	
...3	R779	2007-001100	R-CHIP;62OHM,5%,1/10W,DA,TP,2012	
...3	R780	2007-001100	R-CHIP;62OHM,5%,1/10W,DA,TP,2012	
...3	R781	2007-001100	R-CHIP;62OHM,5%,1/10W,DA,TP,2012	

Level	Loc. No.	Code No.	Description ; Specification	Remark
...3	R782	2007-000300	R-CHIP;10KOHM,5%,1/10W,DA,TP,2012	
...3	R783	2007-000300	R-CHIP;10KOHM,5%,1/10W,DA,TP,2012	
...3	R784	2007-000300	R-CHIP;10KOHM,5%,1/10W,DA,TP,2012	
...3	R785	2007-000872	R-CHIP;4.7KOHM,5%,1/10W,DA,TP,2012	
...3	R786	2007-000290	R-CHIP;100OHM,5%,1/10W,DA,TP,2012	
...3	R787	2007-000290	R-CHIP;100OHM,5%,1/10W,DA,TP,2012	
...3	R788	2007-000468	R-CHIP;1KOHM,5%,1/10W,DA,TP,2012	
...3	R791	2007-000290	R-CHIP;100OHM,5%,1/10W,DA,TP,2012	
...3	R792	2007-000290	R-CHIP;100OHM,5%,1/10W,DA,TP,2012	
...3	R793	2007-000290	R-CHIP;100OHM,5%,1/10W,DA,TP,2012	
...3	R794	2007-000290	R-CHIP;100OHM,5%,1/10W,DA,TP,2012	
...3	R795	2007-001155	R-CHIP;750OHM,5%,1/10W,DA,TP,2012	
...3	R796	2007-000282	R-CHIP;100KOHM,5%,1/10W,DA,TP,2012	
...3	R797	2007-001155	R-CHIP;750OHM,5%,1/10W,DA,TP,2012	
...3	R798	2007-000282	R-CHIP;100KOHM,5%,1/10W,DA,TP,2012	
...3	R799	2007-000468	R-CHIP;1KOHM,5%,1/10W,DA,TP,2012	
...3	R800	2007-001166	R-CHIP;75OHM,5%,1/10W,DA,TP,2012	
...3	R801	2007-001166	R-CHIP;75OHM,5%,1/10W,DA,TP,2012	
...3	R802	2007-001166	R-CHIP;75OHM,5%,1/10W,DA,TP,2012	
...3	R803	2007-000328	R-CHIP;11KOHM,5%,1/10W,DA,TP,2012	
...3	R804	2007-000328	R-CHIP;11KOHM,5%,1/10W,DA,TP,2012	
...3	R805	2007-000001	R-CHIP;68KOHM,5%,1/10W,DA,TP,2012	
...3	R806	2007-000001	R-CHIP;68KOHM,5%,1/10W,DA,TP,2012	
...3	R807	2007-000001	R-CHIP;68KOHM,5%,1/10W,DA,TP,2012	
...3	R808	2007-000001	R-CHIP;68KOHM,5%,1/10W,DA,TP,2012	
...3	R809	2007-000001	R-CHIP;68KOHM,5%,1/10W,DA,TP,2012	
...3	R810	2007-000001	R-CHIP;68KOHM,5%,1/10W,DA,TP,2012	
...3	R811	2007-000001	R-CHIP;68KOHM,5%,1/10W,DA,TP,2012	
...3	R812	2007-000001	R-CHIP;68KOHM,5%,1/10W,DA,TP,2012	
...3	R813	2007-000300	R-CHIP;10KOHM,5%,1/10W,DA,TP,2012	
...3	R814	2007-000300	R-CHIP;10KOHM,5%,1/10W,DA,TP,2012	
...3	R815	2007-000300	R-CHIP;10KOHM,5%,1/10W,DA,TP,2012	
...3	R816	2007-000774	R-CHIP;33KOHM,5%,1/10W,DA,TP,2012	
...3	R817	2007-000615	R-CHIP;24KOHM,5%,1/10W,DA,TP,2012	
...3	R818	2007-000774	R-CHIP;33KOHM,5%,1/10W,DA,TP,2012	
...3	R819	2007-000615	R-CHIP;24KOHM,5%,1/10W,DA,TP,2012	
..2		0202-000187	SOLDER-WIRE FLUX;-,RS60S,D1.2,63Sn/37Pb	S.N.A
..2		0202-001004	SOLDER-CREAM;SQ-2030M SZH-1,S63A,D0.04,6	S.N.A

ASSY PCB CRT

1	*	AA95-00129L	ASSY PCB CRT;-,J51A,43,53,PAL,-	
..2	BDW-GN	AA39-20009G	LEAD CONNECTOR-ASSY;-,YFH800-01,-,1P,700	
..2	C511	2201-000969	C-CERAMIC,DISC;10nF,+80-20%,3.15kV,Y5V,T	
..2	C541	2201-000969	C-CERAMIC,DISC;10nF,+80-20%,3.15kV,Y5V,T	
..2	C571	2201-000969	C-CERAMIC,DISC;10nF,+80-20%,3.15kV,Y5V,T	
..2	CN501	3711-003051	CONNECTOR-HEADER;BOX,8P,1R,2.5mm,STRAGHT	
..2	CN502	3711-003052	CONNECTOR-HEADER;BOX,10P,1R,2.5mm,STRAGH	
..2	CN502B	3711-003052	CONNECTOR-HEADER;BOX,10P,1R,2.5mm,STRAGH	
..2	CN503	3711-003052	CONNECTOR-HEADER;BOX,10P,1R,2.5mm,STRAGH	
..2	CN503B	3711-003052	CONNECTOR-HEADER;BOX,10P,1R,2.5mm,STRAGH	
..2	CNW401	AA39-20027B	LEAD CONNECTOR-ASSY;-,67096-006,S,6P,400	
..2	CNW501	AA39-00127A	LEAD CONNECTOR-ASSY;,-,-,8P,-,-,-,35155-	
..2	CNW502	AA39-00112A	LEAD CONNECTOR-ASSY;,-,-,10P,-,-,-,35155	
..2	CNW503	AA39-00112A	LEAD CONNECTOR-ASSY;,-,-,10P,-,-,-,35155	
..2	FOCUS-	AA39-20115A	LEAD CONNECTOR-ASSY;-,BUSHING,-,1P,500,3	
..2	FOCUS-	AA39-20115A	LEAD CONNECTOR-ASSY;-,BUSHING,-,1P,500,3	
..2	FOCUS-	AA39-20115B	LEAD CONNECTOR-ASSY;-,BUSHING,-,1P,700MM	
..2	GBW-GN	3811-000446	WIRE-PVC CU;TCWA,600V,ROLL,17/0.16mm,#22	S.N.A
..2	GBW-SC	3811-000480	WIRE-PVC CU;BCWA,1KV,ROLL,17/0.16mm,#22,	S.N.A
..2	GDW-GN	AA39-20009D	LEAD CONNECTOR-ASSY;-,YFH800-01,-,1P,500	
..2	GRW-GN	3811-000446	WIRE-PVC CU;TCWA,600V,ROLL,17/0.16mm,#22	S.N.A
..2	GRW-SC	3811-000480	WIRE-PVC CU;BCWA,1KV,ROLL,17/0.16mm,#22,	S.N.A
⚠ ..2	IC501	AA96-50151B	ASSY-H/S;-,AMP,AA61-10060A,TDA6111Q,-	
...3		1201-001131	IC-VIDEO AMP;6111,SIP,9P,-,SINGLE,-,PLAS	
...3		6001-000057	SCREW-MACHINE;RH,+,M3,L6,ZPC(BLK),SWRCH1	S.N.A
...3		6021-000222	NUT-HEXAGON;2C,M3,ZPC(YEL),SM20C 1	S.N.A
...3		AA61-10060A	BRACKET-TR;-,-,CUS-1 1/2H,T0.5,-,-,-	S.N.A
⚠ ..2	IC531	AA96-50151B	ASSY-H/S;-,AMP,AA61-10060A,TDA6111Q,-	
⚠ ..2	IC561	AA96-50151B	ASSY-H/S;-,AMP,AA61-10060A,TDA6111Q,-	
..2	PCB	AA41-10998C	PCB-CRT;P51A,1L,FR-1,330x245x1.6T,3A,M	S.N.A
..2	R506	2001-001088	R-CARBON(S);1KOHM,5%,1/2W,AA,TP,2.4X6.4M	
..2	RDW-GN	AA39-20009F	LEAD CONNECTOR-ASSY;-,YFH800-01,-,1P,200	
..2	SG502	AA27-00084A	COIL;S-23,-,-,-,-,-,-,S-23,5000Mohm	
..2	SG532	AA27-00084A	COIL;S-23,-,-,-,-,-,-,S-23,5000Mohm	
..2	SG562	AA27-00084A	COIL;S-23,-,-,-,-,-,-,S-23,5000Mohm	
⚠ ..2	V501	3704-001019	SOCKET-CRT;10P,29.1PI,35.5PI,AU30U	
⚠ ..2	V531	3704-001019	SOCKET-CRT;10P,29.1PI,35.5PI,AU30U	
⚠ ..2	V561	3704-001019	SOCKET-CRT;10P,29.1PI,35.5PI,AU30U	
..2	VR501	2101-000321	VR-ROTARY;1Mohm,-,0.6W,SIDE	
..2	VR531	2101-000321	VR-ROTARY;1Mohm,-,0.6W,SIDE	
..2	VR561	2101-000321	VR-ROTARY;1Mohm,-,0.6W,SIDE	
..2		AA99-20082X	ASSY-PCB SUB,AUTO; AA95-00129L ,V	S.N.A
...3	C502	2401-000027	C-AL;4.7uF,20%,50V,GP,TP,5x11,5	
...3	C503	2201-000119	C-CERAMIC,DISC;100nF,+80-20%,50V,Y5V,TP,	
...3	C504	2401-001537	C-AL;47uF,20%,25V,GP,TP,6.3x7mm,5mm	
...3	C505	2305-000149	C-FILM,MPEF;100nF,5%,100V,TP,12x12.5x6.5	
...3	C506	2401-000430	C-AL;10uF,20%,250V,GP,TP,10x16mm,5m	
...3	C507	2305-000154	C-FILM,MPEF;100nF,5%,400V,TP,21.5x6.5x11	
...3	C510	2401-000430	C-AL;10uF,20%,250V,GP,TP,10x16mm,5m	
...3	C512	2401-000133	C-AL;1000uF,20%,16V,GP,TP,10x20,5	
...3	C513	2201-000983	C-CERAMIC,DISC;1nF,10%,2kV,Y5P,TP,9x5,7.	
...3	C514	2201-000599	C-CERAMIC,DISC;0.56nF,10%,500V,Y5P,TP,5.	
...3	C532	2401-000027	C-AL;4.7uF,20%,50V,GP,TP,5x11,5	
...3	C533	2201-000119	C-CERAMIC,DISC;100nF,+80-20%,50V,Y5V,TP,	
...3	C534	2401-001537	C-AL;47uF,20%,25V,GP,TP,6.3x7mm,5mm	
...3	C535	2305-000149	C-FILM,MPEF;100nF,5%,100V,TP,12x12.5x6.5	
...3	C536	2401-000430	C-AL;10uF,20%,250V,GP,TP,10x16mm,5m	
...3	C537	2305-000154	C-FILM,MPEF;100nF,5%,400V,TP,21.5x6.5x11	
...3	C540	2401-000430	C-AL;10uF,20%,250V,GP,TP,10x16mm,5m	
...3	C542	2201-000983	C-CERAMIC,DISC;1nF,10%,2kV,Y5P,TP,9x5,7.	
...3	C543	2201-000599	C-CERAMIC,DISC;0.56nF,10%,500V,Y5P,TP,5.	
...3	C562	2401-000027	C-AL;4.7uF,20%,50V,GP,TP,5x11,5	
...3	C563	2201-000119	C-CERAMIC,DISC;100nF,+80-20%,50V,Y5V,TP,	
...3	C564	2401-001537	C-AL;47uF,20%,25V,GP,TP,6.3x7mm,5mm	
...3	C565	2305-000149	C-FILM,MPEF;100nF,5%,100V,TP,12x12.5x6.5	
...3	C566	2401-000430	C-AL;10uF,20%,250V,GP,TP,10x16mm,5m	
...3	C567	2305-000154	C-FILM,MPEF;100nF,5%,400V,TP,21.5x6.5x11	
...3	C570	2401-000430	C-AL;10uF,20%,250V,GP,TP,10x16mm,5m	
...3	C572	2201-000983	C-CERAMIC,DISC;1nF,10%,2kV,Y5P,TP,9x5,7.	
...3	C573	2201-000599	C-CERAMIC,DISC;0.56nF,10%,500V,Y5P,TP,5.	
...3	CN401	3711-002645	CONNECTOR-HEADER;BOX,6P,1R,2.5MM,STRAIGH	
...3	D501	0402-000546	DIODE-RECTIFIER;TVR10G,400V,1.0A,DO-41,T	
...3	D502	0402-000546	DIODE-RECTIFIER;TVR10G,400V,1.0A,DO-41,T	
...3	D503	0402-000493	DIODE-RECTIFIER;1R5GU41,400V,1.5A,DO-15L	
...3	D504	0401-000005	DIODE-SWITCHING;1N4148,100V,200MA,DO-35,	
...3	D509	0401-000005	DIODE-SWITCHING;1N4148,100V,200MA,DO-35,	
...3	D510	0401-000005	DIODE-SWITCHING;1N4148,100V,200MA,DO-35,	
...3	D531	0402-000546	DIODE-RECTIFIER;TVR10G,400V,1.0A,DO-41,T	
...3	D532	0402-000546	DIODE-RECTIFIER;TVR10G,400V,1.0A,DO-41,T	
...3	D533	0402-000493	DIODE-RECTIFIER;1R5GU41,400V,1.5A,DO-15L	
...3	D561	0402-000546	DIODE-RECTIFIER;TVR10G,400V,1.0A,DO-41,T	
...3	D562	0402-000546	DIODE-RECTIFIER;TVR10G,400V,1.0A,DO-41,T	
...3	D563	0402-000493	DIODE-RECTIFIER;1R5GU41,400V,1.5A,DO-15L	
...3	DZ501	0403-001317	DIODE-ZENER;MTZJ3.0B,3.01-3.22V,500mW,DO	
...3	DZ502	0403-000508	DIODE-ZENER;MTZJ5.6B,5.6V,5.45-5.73V,500	
...3	DZ503	0403-000708	DIODE-ZENER;MTZJ13B,13V,12.55-13.21V,500	
...3	DZ531	0403-001317	DIODE-ZENER;MTZJ3.0B,3.01-3.22V,500mW,DO	
...3	DZ532	0403-000508	DIODE-ZENER;MTZJ5.6B,5.6V,5.45-5.73V,500	
...3	DZ533	0403-000708	DIODE-ZENER;MTZJ13B,13V,12.55-13.21V,500	
...3	DZ561	0403-001317	DIODE-ZENER;MTZJ3.0B,3.01-3.22V,500mW,DO	
...3	DZ562	0403-000508	DIODE-ZENER;MTZJ5.6B,5.6V,5.45-5.73V,500	
...3	DZ563	0403-000708	DIODE-ZENER;MTZJ13B,13V,12.55-13.21V,500	
...3	L501	2701-000114	INDUCTOR-AXIAL;10uH,10%,2.5x3.4mm	
...3	L531	2701-000114	INDUCTOR-AXIAL;10uH,10%,2.5x3.4mm	
...3	L561	2701-000114	INDUCTOR-AXIAL;10uH,10%,2.5x3.4mm	
...3	Q501	0502-000006	TR-POWER;KSC1507,NPN,15W,TO-220,TP,120-	
...3	Q502	0501-000389	TR-SMALL SIGNAL;KSC815,NPN,400mW,TO-92,T	
...3	Q531	0502-000006	TR-POWER;KSC1507,NPN,15W,TO-220,TP,120-	
...3	Q561	0502-000006	TR-POWER;KSC1507,NPN,15W,TO-220,TP,120-	
...3	R500	2001-000221	R-CARBON;1.2KOHM,5%,1/8W,AA,TP,1.8X3.2M	
...3	R502	2001-000429	R-CARBON;1KOHM,5%,1/8W,AA,TP,1.8X3.2MM	
...3	R503	2001-000429	R-CARBON;1KOHM,5%,1/8W,AA,TP,1.8X3.2MM	
...3	R507	2001-000429	R-CARBON;1KOHM,5%,1/8W,AA,TP,1.8X3.2MM	
...3	R508	2003-000706	R-METAL OXIDE(S);47Kohm,5%,2W,AA,TP,4.3x	
...3	R511	2001-000009	R-CARBON;20KOHM,5%,1/8W,AA,TP,1.8X3.2MM	
...3	R513	2008-000252	R-FUSIBLE(S);0.47ohm,10%,1/2W,AF,TP,2.5x	
...3	R514	2001-001122	R-CARBON(S);3.9KOHM,5%,1/2W,AA,TP,2.4X6.	
...3	R515	2002-001017	R-COMPOSITION;1Kohm,10%,1/2W,AA,TP,3.7x9	
...3	R516	2001-000009	R-CARBON;20KOHM,5%,1/8W,AA,TP,1.8X3.2MM	
...3	R517	2001-000085	R-CARBON(S);100KOHM,5%,1/2W,AA,TP,2.4X6.	

Level	Loc. No.	Code No.	Description ; Specification	Remark
...3	R518	2002-001021	R-COMPOSITION;560KOHM,10%,1/2W,AA,TP,3.7	
...3	R519	2002-001021	R-COMPOSITION;560KOHM,10%,1/2W,AA,TP,3.7	
...3	R520	2001-000066	R-CARBON(S);10KOHM,5%,1/2W,AA,TP,2.4X6.4	
...3	R521	2001-001052	R-CARBON(S);1.5MOHM,5%,1/2W,AA,TP,2.4X6.	
...3	R522	2002-001006	R-COMPOSITION;4.7Kohm,5%,1/2W,AA,TP,3.7x	
...3	R523	2002-001006	R-COMPOSITION;4.7Kohm,5%,1/2W,AA,TP,3.7x	
...3	R524	2001-000028	R-CARBON(S);100OHM,5%,1/2W,AA,TP,2.4X6.4	
...3	R526	2001-000539	R-CARBON;24KOHM,5%,1/8W,AA,TP,1.8X3.2MM	
...3	R527	2001-000577	R-CARBON;2KOHM,5%,1/8W,AA,TP,1.8X3.2MM	
...3	R528	2001-001015	R-CARBON;9.1KOHM,5%,1/8W,AA,TP,1.8X3.2M	
...3	R529	2002-001021	R-COMPOSITION;560KOHM,10%,1/2W,AA,TP,3.7	
...3	R532	2001-000429	R-CARBON;1KOHM,5%,1/8W,AA,TP,1.8X3.2MM	
...3	R533	2001-000429	R-CARBON;1KOHM,5%,1/8W,AA,TP,1.8X3.2MM	
...3	R536	2001-001088	R-CARBON(S);1KOHM,5%,1/2W,AA,TP,2.4X6.4M	
...3	R537	2001-000429	R-CARBON;1KOHM,5%,1/8W,AA,TP,1.8X3.2MM	
...3	R538	2003-000706	R-METAL OXIDE(S);47Kohm,5%,2W,AA,TP,4.3x	
...3	R540	2001-001000	R-CARBON;82KOHM,5%,1/8W,AA,TP,1.8X3.2MM	
...3	R541	2001-000009	R-CARBON;20KOHM,5%,1/8W,AA,TP,1.8X3.2MM	
...3	R543	2008-000252	R-FUSIBLE(S);0.47ohm,10%,1/2W,AF,TP,2.5x	
...3	R544	2001-001122	R-CARBON(S);3.9KOHM,5%,1/2W,AA,TP,2.4X6.	
...3	R545	2002-001017	R-COMPOSITION;1Kohm,10%,1/2W,AA,TP,3.7x9	
...3	R546	2001-000009	R-CARBON;20KOHM,5%,1/8W,AA,TP,1.8X3.2MM	
...3	R547	2001-000085	R-CARBON(S);100KOHM,5%,1/2W,AA,TP,2.4X6.	
...3	R548	2002-001021	R-COMPOSITION;560KOHM,10%,1/2W,AA,TP,3.7	
...3	R549	2002-001021	R-COMPOSITION;560KOHM,10%,1/2W,AA,TP,3.7	
...3	R550	2001-000066	R-CARBON(S);10KOHM,5%,1/2W,AA,TP,2.4X6.4	
...3	R551	2001-001052	R-CARBON(S);1.5MOHM,5%,1/2W,AA,TP,2.4X6.	
...3	R552	2002-001006	R-COMPOSITION;4.7Kohm,5%,1/2W,AA,TP,3.7x	
...3	R553	2002-001006	R-COMPOSITION;4.7Kohm,5%,1/2W,AA,TP,3.7x	
...3	R554	2001-000028	R-CARBON(S);100OHM,5%,1/2W,AA,TP,2.4X6.4	
...3	R559	2002-001015	R-COMPOSITION;47Kohm,5%,1/2W,AA,TP,3.7x9	
...3	R562	2001-000221	R-CARBON;1.2KOHM,5%,1/8W,AA,TP,1.8X3.2M	
...3	R563	2001-000429	R-CARBON;1KOHM,5%,1/8W,AA,TP,1.8X3.2MM	
...3	R564	2001-000837	R-CARBON;51KOHM,5%,1/8W,AA,TP,1.8X3.2MM	
...3	R566	2001-001088	R-CARBON(S);1KOHM,5%,1/2W,AA,TP,2.4X6.4M	
...3	R567	2001-000429	R-CARBON;1KOHM,5%,1/8W,AA,TP,1.8X3.2MM	
...3	R571	2001-000281	R-CARBON;1000HM,5%,1/8W,AA,TP,1.8X3.2MM	
...3	R572	2003-000706	R-METAL OXIDE(S);47Kohm,5%,2W,AA,TP,4.3x	
...3	R573	2008-000252	R-FUSIBLE(S);0.47ohm,10%,1/2W,AF,TP,2.5x	
...3	R574	2001-001122	R-CARBON(S);3.9KOHM,5%,1/2W,AA,TP,2.4X6.	
...3	R575	2002-001017	R-COMPOSITION;1Kohm,10%,1/2W,AA,TP,3.7x9	
...3	R576	2001-000009	R-CARBON;20KOHM,5%,1/8W,AA,TP,1.8X3.2MM	
...3	R577	2001-000085	R-CARBON(S);100KOHM,5%,1/2W,AA,TP,2.4X6.	
...3	R578	2002-001021	R-COMPOSITION;560KOHM,10%,1/2W,AA,TP,3.7	
...3	R579	2002-001021	R-COMPOSITION;560KOHM,10%,1/2W,AA,TP,3.7	
...3	R580	2001-000066	R-CARBON(S);10KOHM,5%,1/2W,AA,TP,2.4X6.4	
...3	R581	2001-001052	R-CARBON(S);1.5MOHM,5%,1/2W,AA,TP,2.4X6.	
...3	R582	2002-001006	R-COMPOSITION;4.7Kohm,5%,1/2W,AA,TP,3.7x	
...3	R583	2002-001006	R-COMPOSITION;4.7Kohm,5%,1/2W,AA,TP,3.7x	
...3	R584	2001-000028	R-CARBON(S);100OHM,5%,1/2W,AA,TP,2.4X6.4	
...3	R589	2002-001015	R-COMPOSITION;47Kohm,5%,1/2W,AA,TP,3.7x9	
...3	SG351	4715-001036	SURGE ABSORBER;350V,20%,-,-,TP	
...3	SG501	4715-001036	SURGE ABSORBER;350V,20%,-,-,TP	
...3	SG503	4715-001036	SURGE ABSORBER;350V,20%,-,-,TP	
...3	SG533	4715-001036	SURGE ABSORBER;350V,20%,-,-,TP	
...3	SG561	4715-001036	SURGE ABSORBER;350V,20%,-,-,TP	
...3	SG563	4715-001036	SURGE ABSORBER;350V,20%,-,-,TP	
..2		AA63-10002A	BAND-TIE;-,NYLON66 V2,-,-,L100,NTR,-,-	S.N.A
..2		0202-000187	SOLDER-WIRE FLUX;-,RS60S,D1.2,63Sn/37Pb	S.N.A

ASSY TERMINAL BOARD

Level	Loc. No.	Code No.	Description ; Specification	Remark
1	*	AA91-00158X	ASSY TERMINAL BOARD;-,HIPS,VO,BLK,J51A P	
..2		AA63-00045B	TERMINAL-BOARD,ANT;-,HIPS,-,PCJ533R,-	S.N.A
..2		AA64-00182X	INLAY BACK;SP53J5HF,J51A PAL,PS SHEET,T0	S.N.A

ASSY CABINET BOT

Level	Loc. No.	Code No.	Description ; Specification	Remark
1	*	AA91-00155C	ASSY CABINET BOT;-,VO,JER SP200G D/GRY S	
..2		AA60-00065A	SPACER-JERSEY;53J5,JERSEY,-,-,-,GRAY,-,-	S.N.A
..2		AA64-00673A	BADGE-BRAND;AL,SAMSUNG,-,L72,-,PJT,-	
..2		AA64-00284B	CABINET-BOTTOM;-,PCJ533R,JERSEY SP-200G	S.N.A
..2		AA61-20295A	HOLDER-PIN;-,SPT555JHD,ABS,HB,BLK,-	S.N.A

ASSY CABINET

Level	Loc. No.	Code No.	Description ; Specification	Remark
1	*	AA90-00319C	ASSY CABINET;53J5,SP53J5HFX/RAD	S.N.A
..2	AC+BCM	AA60-10011A	SCREW-TAPTITE;HH,+,PC,M4,L12,ZPC(BLK),SW	S.N.A
..2	BCM+CM	6006-001090	SCREW-ASS'Y TAPP;WW,HEX,+,M6,L28.0,ZPC(Y	S.N.A
..2	BM+CBT	6003-001026	SCREW-TAPTITE;RH,+,B,M4,L15,ZPC(BLK),SWR	S.N.A
..2	CBT+CM	6005-001003	SCREW-WOOD;HH,+,M4,L20,ZPC(BLK),SWRCH18A	S.N.A
..2	CBW+CM	6005-001003	SCREW-WOOD;HH,+,M4,L20,ZPC(BLK),SWRCH18A	S.N.A
..2	CBW+HC	AA60-10011A	SCREW-TAPTITE;HH,+,PC,M4,L12,ZPC(BLK),SW	S.N.A
..2	CBW+TB	AA60-10011A	SCREW-TAPTITE;HH,+,PC,M4,L12,ZPC(BLK),SW	S.N.A
..2	CFW+CM	6005-001003	SCREW-WOOD;HH,+,M4,L20,ZPC(BLK),SWRCH18A	S.N.A
..2	DB+CM	6005-001003	SCREW-WOOD;HH,+,M4,L20,ZPC(BLK),SWRCH18A	S.N.A
..2	HC+CM	6005-001003	SCREW-WOOD;HH,+,M4,L20,ZPC(BLK),SWRCH18A	S.N.A
..2	HS+CM	AA60-00021A	SCREW-WOOD;RH,+,M3.5,L22,ZPC(BLK),SWRCH1	S.N.A
..2		AA26-30006E	TRANS-FLYBACK;-,FWZ-50A001B(S),50KV,-	
..2		AA69-30032L	BAG-SHEET;HDPE+PE FOAM,-,1600,1650,-,-,S	S.N.A
..2		AA91-00241A	ASSY-BRACKET,MAIN;-,-,SECC T1.6 7,53J5	
...3	BMSBMM	AA60-10011A	SCREW-TAPTITE;HH,+,PC,M4,L12,ZPC(BLK),SW	S.N.A
...3		AA61-00152B	BRACKET-MAIN,M;-,7 PROJECTION,SECC,-,-,	
...3		AA61-00153B	BRACKET-MAIN,S;-,7 PROJECTION,SECC,-,-,	
..2		AA64-00626C	CABINET-BACK,BOARD;-,53J5,-,HIPS,V0,BLK,	
..2		AA67-20026A	MIRROR-BACK SURFACE;52',GLASS,3.0,BSM,-,	
..2		AA63-00021D	SPACER-MIRROR;PVC,-,BLK,L678,SP-524JMF,-	
..2		AA63-00021C	SPACER-MIRROR;PVC,-,BLK,L970,SP-524JMF,-	
..2		AA61-20285A	HOLDER-BOX;-,3456,PP,VO,WHT,-	S.N.A
..2		AA61-10361A	BRACKET-MIRROR;-,S5288,SECC-1,T1.0,-,-,-	S.N.A
..2		AA61-10242A	BRACKET-MIRROR,C;-,S5288,SECC-1,T1.0,-,-	S.N.A
..2		AA61-00185H	HOLDER-SCREEN,15T;53J5,ABS,BLK,HB,-,L740	
..2		AA60-00036B	SPACER-COVER,DUST;SPONGE,T2,-,690X400,PJ	
..2		AA63-00021G	SPACER-MIRROR;PVC,-,BLK,L420,524J,434J,-	
..2		AA67-00027A	SCREEN-TINT;-,53,-,PMMA,TINT=10%,T3.0,1	
..2		AA67-00023A	SUN-SCREEN;-,53,H/C,A/S,PMMA,T=93%,T2.0	
..2		AA65-30008A	CLAMP-CORD;PE,HB,BLK,-,-,-	S.N.A
..2		AA64-60449B	INLAY-COVER;SP-434JMF,PS,T0.5,149.3X69.5	
..2		AA64-30714A	CABINET-BACK,TOP;-,HIPS,HB,-,BLK,-,SVP52	
..2		AA64-00397B	CABINET-FRONT,WOOD;-,53J5,-,MDF,-,-,T3,-	
..2		AA63-10007C	BAND-PP;-,-,-,W18,-,CLEAR,1G,-	S.N.A

ASSY CHASSIS PART

Level	Loc. No.	Code No.	Description ; Specification	Remark
1	*	AA90-00103F	ASSY CHASSIS PART;J51A ,43J5	S.N.A
..2	CON+HC	6003-001023	SCREW-TAPTITE;RWH,+,B,M3,L10,ZPC(YEL),SW	S.N.A
..2	DF+FBT	6003-001023	SCREW-TAPTITE;RWH,+,B,M3,L10,ZPC(YEL),SW	S.N.A
..2	DF+HC	6003-001023	SCREW-TAPTITE;RWH,+,B,M3,L10,ZPC(YEL),SW	S.N.A
..2	PM+HC	6003-001023	SCREW-TAPTITE;RWH,+,B,M3,L10,ZPC(YEL),SW	S.N.A
..2	TBA+AV	6003-001026	SCREW-TAPTITE;RH,+,B,M4,L15,ZPC(BLK),SWR	S.N.A
..2	TBA+HC	6003-001023	SCREW-TAPTITE;RWH,+,B,M3,L10,ZPC(YEL),SW	S.N.A
..2	TBA+SC	6003-001026	SCREW-TAPTITE;RH,+,B,M4,L15,ZPC(BLK),SWR	S.N.A
..2		AA60-10011A	SCREW-TAPTITE;HH,+,PC,M4,L12,ZPC(BLK),SW	S.N.A
..2		AA61-00051B	HOLDER-CHASSIS;-,PCJ533R,ABS,VO,GRAY,E-2	S.N.A

ASSY-CRT-(G)

Level	Loc. No.	Code No.	Description ; Specification	Remark
1	*	AA94-00980A	ASSY-CRT-(G);P16LNM07HKA,+380MG,7,BARE,	
..2		AA61-00057C	HOLDER-CAP;-,7 PROJECTION,PC,-,CLEAR,-	S.N.A
⚠ ..2		AA27-50005C	DEFLECTION-YOKE;-,DPD-4392AL,43'/PJTCRT,	
..2		AA39-00018A	LEAD CONNECTOR-ASSY;-,YFH800-01,YRH187RH	S.N.A
..2		AA67-10080A	LENS-ASSY;52INCH,SSM-75RS-52,-,SEKINOS,C	
..2		AA67-10039A	LENS;-,SSM-75RS-43,-,GRN C-ELEMENT	
..2		AA91-00103C	ASSY-WIRE,CRT;-,-,7CRT,PROJECTION	S.N.A
...3		AA61-00053B	BRACKET-WIRE;-,PROJECTION,SECC-1,T1.6,-,	S.N.A
...3		AA61-00054B	BRACKET-EARTH;-,PROJECTION,PBS,-,-,-,-	S.N.A
...3		AA61-00055C	BRACKET-CRT,WIRE;-,PJT,SUS304 1/8H,-,-,-	S.N.A
⚠ ..2		AA26-30006F	TRANS-FLYBACK;-,FWZ-50A001C,55,30KV	
..2		AA63-00061B	SPACER-CAP;EPDM,-,BLK,-,PROJECTION,-	

Level	Loc. No.	Code No.	Description ; Specification	Remark
..2		AA63-00091C	SPACER-CLENS;SILICON,-,GRAY,-,PROJECTION	S.N.A
..2		AA63-00060C	SPACER-CRT;SILICON,-,GRAY,7,PROJECTION,	S.N.A
..2		AA64-00207B	CASE-COUPLER,G;-,PROJECTION,7,ALDC8,-,B	S.N.A
..2		AA27-00003B	MAGNET-CONVERGENCE;-,JH92LT-029,29.1MM	
⚠ ..2		AA03-10026V	CRT-MONO;-,P16LNM07HKA,-,7INCH,90deg,90	S.N.A
..2		AA60-10011A	SCREW-TAPTITE;HH,+,PC,M4,L12,ZPC(BLK),SW	S.N.A
..2		AA63-60025A	SPACER-DY;NEOPRENE,-,BLK,V0,S4388,-	S.N.A
..2		AA63-10002A	BAND-TIE;-,NYLON66 V2,-,-,L100,NTR,-,-	S.N.A
..2		AA63-00099A	SPACER-FELT;PJT,-,BLK,-,30X30	S.N.A
..2		AA63-00076A	SPACER-LENS;FELT ,T1.0,BROWN,7CRT,PROJE	S.N.A
..2		AA61-00056B	BRACKET-LENS;-,PROJECTION,SECC,T1.6,-,-	S.N.A

ASSY-CRT-(B)

1	*	AA94-00976A	ASSY-CRT-(B);P16NNM07BMB,+380MG,7,BARE,	
..2		AA61-00057C	HOLDER-CAP;-,7 PROJECTION,PC,-,CLEAR,-	S.N.A
⚠ ..2		AA27-50005C	DEFLECTION-YOKE;-,DPD-4392AL,43'/PJTCRT,	
..2		AA39-00018A	LEAD CONNECTOR-ASSY;-,YFH800-01,YRH187RH	S.N.A
..2		AA67-10080A	LENS-ASSY;52INCH,SSM-75RS-52,-,SEKINOS,C	
..2		AA67-10037A	LENS;43INCH,SSM-75RS-43,-,SEKINOS,C	
..2		AA91-00103C	ASSY-WIRE,CRT;-,-,7CRT,PROJECTION	S.N.A
...3		AA61-00053B	BRACKET-WIRE;-,PROJECTION,SECC-1,T1.6,-,	S.N.A
...3		AA61-00054B	BRACKET-EARTH;-,PROJECTION,PBS,-,-,-,-	S.N.A
...3		AA61-00055C	BRACKET-CRT,WIRE;-,PJT,SUS304 1/8H,-,-,-	S.N.A
⚠ ..2		AA26-30006F	TRANS-FLYBACK;-,FWZ-50A001C,55,30KV	
..2		AA63-00061B	SPACER-CAP;EPDM,-,BLK,-,PROJECTION,-	
..2		AA63-00091C	SPACER-CLENS;SILICON,-,GRAY,-,PROJECTION	S.N.A
..2		AA63-00060C	SPACER-CRT;SILICON,-,GRAY,7,PROJECTION,	S.N.A
..2		AA64-00208B	CASE-COUPLER,B;-,PROJECTION,7,ALDC,-,BL	S.N.A
..2		AA27-60003C	MAGNET-CONVERGENCE;-,JH92LTU-SC-20,29.1m	
⚠ ..2		AA03-10026W	CRT-MONO;-,P16LNM07BMB,-,7INCH,90deg,90	S.N.A
..2		AA60-10011A	SCREW-TAPTITE;HH,+,PC,M4,L12,ZPC(BLK),SW	S.N.A
..2		AA63-60025A	SPACER-DY;NEOPRENE,-,BLK,V0,S4388,-	S.N.A
..2		AA63-10002A	BAND-TIE;-,NYLON66 V2,-,-,L100,NTR,-,-	S.N.A
..2		AA63-00099A	SPACER-FELT;PJT,-,BLK,-,30X30	S.N.A
..2		AA63-00076A	SPACER-LENS;FELT ,T1.0,BROWN,7CRT,PROJE	S.N.A
..2		AA61-00056B	BRACKET-LENS;-,PROJECTION,SECC,T1.6,-,-	S.N.A

ASSY-CRT-(R)

1	*	AA94-00971A	ASSY-CRT-(R);P16LNM07RJA,+380MG,7,BARE,	
..2		AA61-00057C	HOLDER-CAP;-,7 PROJECTION,PC,-,CLEAR,-	S.N.A
⚠ ..2		AA27-50005C	DEFLECTION-YOKE;-,DPD-4392AL,43'/PJTCRT,	
..2		AA39-00018A	LEAD CONNECTOR-ASSY;-,YFH800-01,YRH187RH	S.N.A
..2		AA67-10080A	LENS-ASSY;52INCH,SSM-75RS-52,-,SEKINOS,C	
..2		AA67-10038A	LENS;43INCH,SSM-75RS-43,-,SEKINOS,R	
..2		AA91-00103C	ASSY-WIRE,CRT;-,-,7CRT,PROJECTION	S.N.A
...3		AA61-00053B	BRACKET-WIRE;-,PROJECTION,SECC-1,T1.6,-,	S.N.A
...3		AA61-00054B	BRACKET-EARTH;-,PROJECTION,PBS,-,-,-,-	S.N.A
...3		AA61-00055C	BRACKET-CRT,WIRE;-,PJT,SUS304 1/8H,-,-,-	S.N.A
⚠ ..2		AA26-30006F	TRANS-FLYBACK;-,FWZ-50A001C,55,30KV	
..2		AA63-00061B	SPACER-CAP;EPDM,-,BLK,-,PROJECTION,-	
..2		AA63-00091C	SPACER-CLENS;SILICON,-,GRAY,-,PROJECTION	S.N.A
..2		AA63-00060C	SPACER-CRT;SILICON,-,GRAY,7,PROJECTION,	S.N.A
..2		AA64-00206B	CASE-COUPLER,R;-,PROJECTION,-,ALDC8,-,BL	S.N.A
..2		AA27-00003B	MAGNET-CONVERGENCE;-,JH92LT-029,29.1MM	
⚠ ..2		AA03-10026U	CRT-MONO;-,P16LNM07RJA,-,7INCH,90deg,90	
..2		AA60-10011A	SCREW-TAPTITE;HH,+,PC,M4,L12,ZPC(BLK),SW	S.N.A
..2		AA63-60025A	SPACER-DY;NEOPRENE,-,BLK,V0,S4388,-	S.N.A
..2		AA63-10002A	BAND-TIE;-,NYLON66 V2,-,-,L100,NTR,-,-	S.N.A
..2		AA63-00099A	SPACER-FELT;PJT,-,BLK,-,30X30	S.N.A
..2		AA63-00076A	SPACER-LENS;FELT ,T1.0,BROWN,7CRT,PROJE	S.N.A
..2		AA61-00056B	BRACKET-LENS;-,PROJECTION,SECC,T1.6,-,-	S.N.A

ASSY CABINET MASK

1	*	AA91-00394A	ASSY CABINET MASK;-,HB,BLK,S704+B702 TAN	
..2		AA64-01163B	CABINET-MASK,SIDE;53J5,S704+B702 ,ABS,HB	
...3		AA64-01163A	CABINET-MASK,SIDE;53J5,L815 APCHUL,ABS,H	S.N.A
..2		AA64-01160E	CABINET-MASK,BOT;53J5HF,S704+B702 DOLBY,	
...3		AA64-01160A	CABINET-MASK;53J5,L1087 APCHUL,ABS,HB,BL	S.N.A
..2		AA64-01160D	CABINET-MASK,TOP;53J5HF,S704+B702 TANTUS	
...3		AA64-01160A	CABINET-MASK;53J5,L1087 APCHUL,ABS,HB,BL	S.N.A
..2		AA63-00063A	SPACER-DUAL,LOCK;#400,-,-,19X19,SVP-614J	S.N.A
..2		AA61-00441B	HOLDER-CORNER;E2 ALL,ABS,BLK,HB,-,S704+B	S.N.A

ASSY ACCESSORY

1	*	AA94-02563A	ASSY ACCESSORY;SP53J5HFX/RAD,J51A,NEWZEA	S.N.A
..2		AA69-30009C	BAG-SHEET;LDPE,T0.08,W150,L120,-,-,-	S.N.A
..2		AA68-00856A	MANUAL USERS;J51A,W/P100(G),44P,B5,1,ENG	S.N.A
..2		AA68-00711A	CARD WARRANTY;ALL,W/P100G,-,-,-,-,-	S.N.A
..2		AA61-20126A	HOLDER-LEG;-,-,ABS,HB,BLK,-	S.N.A
..2		AA39-40001B	CABLE-RCA;-,RCA,1500mm,0.12/10,RED/WHT/Y	

REMOCON

1	*	AA59-00100A	REMOCON;-,TM57,KS88P0416S,53,L/GRAY,S/	

7-4 SP61J5HFX/RAD

ASSY PCB MAIN(OPT)

Level	Loc. No.	Code No.	Description ; Specification	Remark
1	*	AA94-03113P	ASSY PCB MAIN(OPT);SP61J5HFX/RAD,J51A,NE	
..2	C664	2401-001068	C-AL;3300uF,20%,50V,GP,BK,22x40,10	
..2	C665	2401-000737	C-AL;2200uF,20%,50V,GP,TP,18x35.5,7	
..2	CN201	3711-003051	CONNECTOR-HEADER;BOX,8P,1R,2.5mm,STRAGHT	
..2	CN202	3711-003052	CONNECTOR-HEADER;BOX,10P,1R,2.5mm,STRAGH	
..2	CN501	3711-003051	CONNECTOR-HEADER;BOX,8P,1R,2.5mm,STRAGHT	
..2	CN801	3711-003974	CONNECTOR-HEADER;BOX,12P,1R,2.5mm,STRAIG	
..2	CNT01	3710-001208	CONNECTOR-SOCKET;32P,2R,2.54mm,STRAIGHT,	
..2	CNT02	3710-001208	CONNECTOR-SOCKET;32P,2R,2.54mm,STRAIGHT,	
..2	CNY01	3711-003973	CONNECTOR-HEADER;BOX,11P,1R,2.5mm,STRAIG	
..2	CS803	2401-003370	C-AL;47uF,20%,450V,GP,BK,16X35.5,7.	
..2	DS801	0402-000102	DIODE-BRIDGE;D2SB60,600V,1.5A,-	
..2	H001	AA40-10006S	TUNER-F/S;TECC2949PG30A(S),PAL-B/G,TR,18	
⚠ ..2	IC101	AA96-00110C	ASSY-H/S;-,-,AA62-30013K,SI-3090C,-	
...3		1203-000577	IC-VOLTAGE REGUATOR;3090,ZIP,5P,-,PLASTI	
...3		6003-000333	SCREW-TAPTITE;RH,+,2S,M3,L10,ZPC(YEL),SW	S.N.A
...3		AA62-30013K	HEATSINK-ES;-,-,-,-,44/18,-,WHT,A6063 EX	
⚠ ..2	IC102	AA96-00110A	ASSY-H/S;-,-,AA62-30013K,SI-3050C,-	
...3		1203-000203	IC-POSI.ADJUST REG.;3050,TO-220,5P,-,PLA	
...3		6003-000333	SCREW-TAPTITE;RH,+,2S,M3,L10,ZPC(YEL),SW	S.N.A
...3		AA62-30013K	HEATSINK-ES;-,-,-,-,44/18,-,WHT,A6063 EX	
⚠ ..2	IC103	1204-001276	IC-SOUND PROCESSOR;TDA9810,DIP,24P,400MI	
⚠ ..2	IC502	AA96-00110A	ASSY-H/S;-,-,AA62-30013K,SI-3050C,-	
⚠ ..2	IC503	AA96-00110A	ASSY-H/S;-,-,AA62-30013K,SI-3050C,-	
⚠ ..2	IC504	AA96-00110A	ASSY-H/S;-,-,AA62-30013K,SI-3050C,-	
⚠ ..2	IC665	AA96-00038A	ASSY-H/S;-,SOUND AMP,AA62-30173E,TDA726	
...3		0205-000129	GREASE-SILICON;SC102,JAPAN	S.N.A
...3		1201-001026	IC-POWER AMP;7265,ZIP,11P,19.6MIL,DUAL,1	
...3		6003-000333	SCREW-TAPTITE;RH,+,2S,M3,L10,ZPC(YEL),SW	S.N.A
...3		AA62-30173E	HEAT-SINK,ES;-,-,T1.0,WHITE,SCREW-HOLE(1	S.N.A
..2	IF/CAB	AA39-30007B	IF-CABLE;-,T,150mm,1365#26	
..2	L201	AA27-10001C	COIL-CHOKE;-,100uH,K,-,5.0A,ST,700UH-K(R	
..2	L603	AA29-00004A	FILTER-LINE NOISE;-,20UH,3A,AC80-260V,TQ	
..2	QZ107	AA96-50162F	ASSY-H/S;-,POWER,AA62-30013E,2SA1011,30	
...3		0502-000131	TR-POWER;2SA1011-D,PNP,1.2W,TO-220,-,60	
...3		6003-000333	SCREW-TAPTITE;RH,+,2S,M3,L10,ZPC(YEL),SW	S.N.A
...3		AA62-30013E	HEAT-SINK,ES;-,A6063 EXTR,-,-,30(21) T02	S.N.A
..2	QZ108	AA96-50162G	ASSY-H/S;-,AMP,AA62-30013E,2SC2344,30MM	
...3		0502-000153	TR-POWER;2SC2344-D,NPN,1.2W,TO-220,-,60	
...3		6003-000333	SCREW-TAPTITE;RH,+,2S,M3,L10,ZPC(YEL),SW	S.N.A
...3		AA62-30013E	HEAT-SINK,ES;-,A6063 EXTR,-,-,30(21) T02	S.N.A
..2	R913	2001-000786	R-CARBON;47KOHM,5%,1/8W,AA,TP,1.8X3.2MM	
..2	RL801	3501-001053	RELAY-POWER;5VDC,530MW,10A,1FORMA,15MS,5	
..2	TS801	AA26-00019A	TRANS-SWITCHING;-,AC80~260V,-,US,-,4MH,B	
..2	X901	2801-003224	CRYSTAL-UNIT;32.768KHZ,20PPM,28-AAY,12.5	
..2		AA95-00519E	ASSY-PCB,PROSCAN;-,SP53J5HF,J51A,-,-,-	
...3	CNP901	3711-003543	CONNECTOR-HEADER;NOWALL,16P,1R,2.54MM,AN	
...3	CNP902	3711-001283	CONNECTOR-HEADER;NOWALL,14P,1R,2.5mm,ANG	
...3	CNP903	3711-001283	CONNECTOR-HEADER;NOWALL,14P,1R,2.5mm,ANG	
...3	CNP904	3711-001283	CONNECTOR-HEADER;NOWALL,14P,1R,2.5mm,ANG	
...3	XP601	2801-003811	CRYSTAL-UNIT;24.576MHZ,20PPM,28-AAM,30PF	
...3		AA99-20079H	ASSY-PCB SUB,AUTO; AA95-00519E ,V	S.N.A
....4	CP101	2203-000938	C-CERAMIC,CHIP;0.47nF,5%,50V,NP0,TP,2012	
....4	CP102	2203-000938	C-CERAMIC,CHIP;0.47nF,5%,50V,NP0,TP,2012	
....4	CP103	2203-000761	C-CERAMIC,CHIP;330nF,10%,16V,X7R,TP,2012	
....4	CP104	2203-000761	C-CERAMIC,CHIP;330nF,10%,16V,X7R,TP,2012	
....4	CP106	2203-000444	C-CERAMIC,CHIP;1nF,10%,50V,X7R,TP,2012,-	
....4	CP109	2203-000218	C-CERAMIC,CHIP;100nF,20%,50V,Y5V,TP,2012	
....4	CP110	2401-001496	C-AL;47uF,20%,16V,GP,TP,5x7,5	
....4	CP111	2203-000979	C-CERAMIC,CHIP;47nF,10%,50V,X7R,TP,2012	
....4	CP112	2401-000486	C-AL;10uF,20%,50V,GP,TP,6.3x7mm,5	
....4	CP113	2203-001172	C-CERAMIC,CHIP;0.006nF,0.25pF,50V,NP0,TP	
....4	CP114	2203-001172	C-CERAMIC,CHIP;0.006nF,0.25pF,50V,NP0,TP	
....4	CP115	2203-000218	C-CERAMIC,CHIP;100nF,20%,50V,Y5V,TP,2012	
....4	CP116	2401-002009	C-AL;100uF,20%,16V,GP,TP,6.3x7,5	
....4	CP117	2203-000218	C-CERAMIC,CHIP;100nF,20%,50V,Y5V,TP,2012	
....4	CP118	2401-002009	C-AL;100uF,20%,16V,GP,TP,6.3x7,5	
....4	CP119	2203-000218	C-CERAMIC,CHIP;100nF,20%,50V,Y5V,TP,2012	
....4	CP120	2203-001002	C-CERAMIC,CHIP;0.047nF,5%,50V,NP0,TP,201	
....4	CP121	2203-001002	C-CERAMIC,CHIP;0.047nF,5%,50V,NP0,TP,201	
....4	CP122	2203-000761	C-CERAMIC,CHIP;330nF,10%,16V,X7R,TP,2012	
....4	CP126	2203-000218	C-CERAMIC,CHIP;100nF,20%,50V,Y5V,TP,2012	
....4	CP127	2401-002009	C-AL;100uF,20%,16V,GP,TP,6.3x7,5	
....4	CP128	2401-002009	C-AL;100uF,20%,16V,GP,TP,6.3x7,5	
....4	CP129	2203-000218	C-CERAMIC,CHIP;100nF,20%,50V,Y5V,TP,2012	
....4	CP130	2401-002009	C-AL;100uF,20%,16V,GP,TP,6.3x7,5	
....4	CP131	2203-000218	C-CERAMIC,CHIP;100nF,20%,50V,Y5V,TP,2012	
....4	CP132	2401-000486	C-AL;10uF,20%,50V,GP,TP,6.3x7mm,5	
....4	CP133	2203-000218	C-CERAMIC,CHIP;100nF,20%,50V,Y5V,TP,2012	
....4	CP135	2203-000575	C-CERAMIC,CHIP;220NF,10%,25V,X7R,TP,2012	
....4	CP137	2203-000218	C-CERAMIC,CHIP;100nF,20%,50V,Y5V,TP,2012	
....4	CP139	2203-000575	C-CERAMIC,CHIP;220NF,10%,25V,X7R,TP,2012	
....4	CP141	2203-000218	C-CERAMIC,CHIP;100nF,20%,50V,Y5V,TP,2012	
....4	CP142	2203-000938	C-CERAMIC,CHIP;0.47nF,5%,50V,NP0,TP,2012	
....4	CP143	2203-000938	C-CERAMIC,CHIP;0.47nF,5%,50V,NP0,TP,2012	
....4	CP144	2203-000938	C-CERAMIC,CHIP;0.47nF,5%,50V,NP0,TP,2012	
....4	CP145	2203-000761	C-CERAMIC,CHIP;330nF,10%,16V,X7R,TP,2012	
....4	CP301	2203-000218	C-CERAMIC,CHIP;100nF,20%,50V,Y5V,TP,2012	
....4	CP302	2203-000218	C-CERAMIC,CHIP;100nF,20%,50V,Y5V,TP,2012	
....4	CP303	2203-000218	C-CERAMIC,CHIP;100nF,20%,50V,Y5V,TP,2012	
....4	CP304	2203-000218	C-CERAMIC,CHIP;100nF,20%,50V,Y5V,TP,2012	
....4	CP305	2401-001496	C-AL;47uF,20%,16V,GP,TP,5x7,5	
....4	CP306	2203-000218	C-CERAMIC,CHIP;100nF,20%,50V,Y5V,TP,2012	
....4	CP307	2401-001496	C-AL;47uF,20%,16V,GP,TP,5x7,5	
....4	CP308	2203-000218	C-CERAMIC,CHIP;100nF,20%,50V,Y5V,TP,2012	
....4	CP309	2401-001496	C-AL;47uF,20%,16V,GP,TP,5x7,5	
....4	CP310	2203-000218	C-CERAMIC,CHIP;100nF,20%,50V,Y5V,TP,2012	
....4	CP311	2401-001496	C-AL;47uF,20%,16V,GP,TP,5x7,5	
....4	CP312	2203-000218	C-CERAMIC,CHIP;100nF,20%,50V,Y5V,TP,2012	
....4	CP313	2203-000218	C-CERAMIC,CHIP;100nF,20%,50V,Y5V,TP,2012	
....4	CP314	2203-000218	C-CERAMIC,CHIP;100nF,20%,50V,Y5V,TP,2012	
....4	CP315	2203-000218	C-CERAMIC,CHIP;100nF,20%,50V,Y5V,TP,2012	
....4	CP316	2203-000218	C-CERAMIC,CHIP;100nF,20%,50V,Y5V,TP,2012	
....4	CP317	2203-000218	C-CERAMIC,CHIP;100nF,20%,50V,Y5V,TP,2012	
....4	CP401	2203-000218	C-CERAMIC,CHIP;100nF,20%,50V,Y5V,TP,2012	
....4	CP402	2203-000218	C-CERAMIC,CHIP;100nF,20%,50V,Y5V,TP,2012	
....4	CP403	2401-002009	C-AL;100uF,20%,16V,GP,TP,6.3x7,5	
....4	CP404	2203-000218	C-CERAMIC,CHIP;100nF,20%,50V,Y5V,TP,2012	
....4	CP405	2203-000218	C-CERAMIC,CHIP;100nF,20%,50V,Y5V,TP,2012	
....4	CP406	2203-000142	C-CERAMIC,CHIP;1.5nF,10%,50V,X7R,TP,2012	
....4	CP407	2203-000239	C-CERAMIC,CHIP;0.1nF,5%,50V,NP0,TP,2012	
....4	CP408	2203-000218	C-CERAMIC,CHIP;100nF,20%,50V,Y5V,TP,2012	
....4	CP409	2203-000555	C-CERAMIC,CHIP;0.02nF,5%,50V,NP0,TP,2012	
....4	CP410	2203-000218	C-CERAMIC,CHIP;100nF,20%,50V,Y5V,TP,2012	
....4	CP411	2203-000218	C-CERAMIC,CHIP;100nF,20%,50V,Y5V,TP,2012	
....4	CP412	2203-000555	C-CERAMIC,CHIP;0.02nF,5%,50V,NP0,TP,2012	
....4	CP413	2203-000555	C-CERAMIC,CHIP;0.02nF,5%,50V,NP0,TP,2012	
....4	CP414	2203-000218	C-CERAMIC,CHIP;100nF,20%,50V,Y5V,TP,2012	
....4	CP415	2203-000218	C-CERAMIC,CHIP;100nF,20%,50V,Y5V,TP,2012	
....4	CP416	2203-000218	C-CERAMIC,CHIP;100nF,20%,50V,Y5V,TP,2012	
....4	CP417	2203-000218	C-CERAMIC,CHIP;100nF,20%,50V,Y5V,TP,2012	
....4	CP418	2404-001020	C-TA,CHIP;10uF,20%,10V,GP,TP,3216,3.2	
....4	CP419	2404-001020	C-TA,CHIP;10uF,20%,10V,GP,TP,3216,3.2	
....4	CP420	2404-001020	C-TA,CHIP;10uF,20%,10V,GP,TP,3216,3.2	
....4	CP501	2203-000925	C-CERAMIC,CHIP;470NF,+80-20%,50V,Y5V,TP,	
....4	CP502	2203-000925	C-CERAMIC,CHIP;470NF,+80-20%,50V,Y5V,TP,	
....4	CP503	2203-000925	C-CERAMIC,CHIP;470NF,+80-20%,50V,Y5V,TP,	
....4	CP504	2203-000925	C-CERAMIC,CHIP;470NF,+80-20%,50V,Y5V,TP,	
....4	CP505	2203-000925	C-CERAMIC,CHIP;470NF,+80-20%,50V,Y5V,TP,	
....4	CP506	2401-001496	C-AL;47uF,20%,16V,GP,TP,5x7,5	
....4	CP507	2203-000218	C-CERAMIC,CHIP;100nF,20%,50V,Y5V,TP,2012	
....4	CP508	2203-000925	C-CERAMIC,CHIP;470NF,+80-20%,50V,Y5V,TP,	
....4	CP509	2203-000925	C-CERAMIC,CHIP;470NF,+80-20%,50V,Y5V,TP,	
....4	CP510	2203-000925	C-CERAMIC,CHIP;470NF,+80-20%,50V,Y5V,TP,	
....4	CP511	2203-000925	C-CERAMIC,CHIP;470NF,+80-20%,50V,Y5V,TP,	
....4	CP512	2203-000925	C-CERAMIC,CHIP;470NF,+80-20%,50V,Y5V,TP,	
....4	CP513	2203-000925	C-CERAMIC,CHIP;470NF,+80-20%,50V,Y5V,TP,	
....4	CP514	2203-000925	C-CERAMIC,CHIP;470NF,+80-20%,50V,Y5V,TP,	
....4	CP515	2203-000925	C-CERAMIC,CHIP;470NF,+80-20%,50V,Y5V,TP,	
....4	CP516	2203-000925	C-CERAMIC,CHIP;470NF,+80-20%,50V,Y5V,TP,	

Level	Loc. No.	Code No.	Description ; Specification	Remark
....4	CP517	2203-000925	C-CERAMIC,CHIP;470NF,+80-20%,50V,Y5V,TP,	
....4	CP518	2401-000598	C-AL;1uF,20%,50V,GP,TP,4x7,5	
....4	CP519	2203-000925	C-CERAMIC,CHIP;470NF,+80-20%,50V,Y5V,TP,	
....4	CP520	2203-000925	C-CERAMIC,CHIP;470NF,+80-20%,50V,Y5V,TP,	
....4	CP521	2203-000925	C-CERAMIC,CHIP;470NF,+80-20%,50V,Y5V,TP,	
....4	CP522	2203-000925	C-CERAMIC,CHIP;470NF,+80-20%,50V,Y5V,TP,	
....4	CP523	2203-000925	C-CERAMIC,CHIP;470NF,+80-20%,50V,Y5V,TP,	
....4	CP524	2203-000260	C-CERAMIC,CHIP;10nF,10%,50V,X7R,TP,2012	
....4	CP525	2203-000218	C-CERAMIC,CHIP;100nF,20%,50V,Y5V,TP,2012	
....4	CP527	2203-000218	C-CERAMIC,CHIP;100nF,20%,50V,Y5V,TP,2012	
....4	CP528	2401-001496	C-AL;47uF,20%,16V,GP,TP,5x7,5	
....4	CP529	2203-000575	C-CERAMIC,CHIP;220NF,10%,25V,X7R,TP,2012	
....4	CP530	2203-000575	C-CERAMIC,CHIP;220NF,10%,25V,X7R,TP,2012	
....4	CP531	2203-000575	C-CERAMIC,CHIP;220NF,10%,25V,X7R,TP,2012	
....4	CP532	2203-000925	C-CERAMIC,CHIP;470NF,+80-20%,50V,Y5V,TP,	
....4	CP533	2401-000486	C-AL;10uF,20%,50V,GP,TP,6.3x7mm,5	
....4	CP534	2203-000260	C-CERAMIC,CHIP;10nF,10%,50V,X7R,TP,2012	
....4	CP535	2203-000260	C-CERAMIC,CHIP;10nF,10%,50V,X7R,TP,2012	
....4	CP536	2203-000260	C-CERAMIC,CHIP;10nF,10%,50V,X7R,TP,2012	
....4	CP537	2203-000260	C-CERAMIC,CHIP;10nF,10%,50V,X7R,TP,2012	
....4	CP538	2203-000260	C-CERAMIC,CHIP;10nF,10%,50V,X7R,TP,2012	
....4	CP539	2203-000260	C-CERAMIC,CHIP;10nF,10%,50V,X7R,TP,2012	
....4	CP540	2401-000486	C-AL;10uF,20%,50V,GP,TP,6.3x7mm,5	
....4	CP541	2203-001002	C-CERAMIC,CHIP;0.047nF,5%,50V,NP0,TP,201	
....4	CP542	2203-001002	C-CERAMIC,CHIP;0.047nF,5%,50V,NP0,TP,201	
....4	CP545	2203-000925	C-CERAMIC,CHIP;470NF,+80-20%,50V,Y5V,TP,	
....4	CP546	2203-000260	C-CERAMIC,CHIP;10nF,10%,50V,X7R,TP,2012	
....4	CP547	2203-000260	C-CERAMIC,CHIP;10nF,10%,50V,X7R,TP,2012	
....4	CP548	2203-000260	C-CERAMIC,CHIP;10nF,10%,50V,X7R,TP,2012	
....4	CP549	2203-000218	C-CERAMIC,CHIP;100nF,20%,50V,Y5V,TP,2012	
....4	CP550	2203-000218	C-CERAMIC,CHIP;100nF,20%,50V,Y5V,TP,2012	
....4	CP551	2203-000218	C-CERAMIC,CHIP;100nF,20%,50V,Y5V,TP,2012	
....4	CP552	2401-001496	C-AL;47uF,20%,16V,GP,TP,5x7,5	
....4	CP553	2203-000218	C-CERAMIC,CHIP;100nF,20%,50V,Y5V,TP,2012	
....4	CP554	2203-000218	C-CERAMIC,CHIP;100nF,20%,50V,Y5V,TP,2012	
....4	CP555	2203-000218	C-CERAMIC,CHIP;100nF,20%,50V,Y5V,TP,2012	
....4	CP556	2203-000218	C-CERAMIC,CHIP;100nF,20%,50V,Y5V,TP,2012	
....4	CP559	2203-000218	C-CERAMIC,CHIP;100nF,20%,50V,Y5V,TP,2012	
....4	CP601	2203-001088	C-CERAMIC,CHIP;0.005nF,0.25pF,50V,NP0,TP	
....4	CP602	2203-001088	C-CERAMIC,CHIP;0.005nF,0.25pF,50V,NP0,TP	
....4	CP603	2203-000925	C-CERAMIC,CHIP;470NF,+80-20%,50V,Y5V,TP,	
....4	CP604	2203-000938	C-CERAMIC,CHIP;0.47nF,5%,50V,NP0,TP,2012	
....4	CP605	2203-000444	C-CERAMIC,CHIP;1nF,10%,50V,X7R,TP,2012,-	
....4	CP607	2203-000218	C-CERAMIC,CHIP;100nF,20%,50V,Y5V,TP,2012	
....4	CP609	2203-000218	C-CERAMIC,CHIP;100nF,20%,50V,Y5V,TP,2012	
....4	CP610	2203-000218	C-CERAMIC,CHIP;100nF,20%,50V,Y5V,TP,2012	
....4	CP611	2203-000444	C-CERAMIC,CHIP;1nF,10%,50V,X7R,TP,2012,-	
....4	CP612	2203-000444	C-CERAMIC,CHIP;1nF,10%,50V,X7R,TP,2012,-	
....4	CP613	2203-000444	C-CERAMIC,CHIP;1nF,10%,50V,X7R,TP,2012,-	
....4	CP614	2203-000218	C-CERAMIC,CHIP;100nF,20%,50V,Y5V,TP,2012	
....4	CP615	2203-000218	C-CERAMIC,CHIP;100nF,20%,50V,Y5V,TP,2012	
....4	CP616	2203-001002	C-CERAMIC,CHIP;0.047nF,5%,50V,NP0,TP,201	
....4	CP617	2203-000218	C-CERAMIC,CHIP;100nF,20%,50V,Y5V,TP,2012	
....4	CP618	2203-000239	C-CERAMIC,CHIP;0.1nF,5%,50V,NP0,TP,2012	
....4	CP619	2203-000218	C-CERAMIC,CHIP;100nF,20%,50V,Y5V,TP,2012	
....4	CP620	2203-000218	C-CERAMIC,CHIP;100nF,20%,50V,Y5V,TP,2012	
....4	CP621	2203-000239	C-CERAMIC,CHIP;0.1nF,5%,50V,NP0,TP,2012	
....4	CP622	2203-000142	C-CERAMIC,CHIP;1.5nF,10%,50V,X7R,TP,2012	
....4	CP623	2203-000218	C-CERAMIC,CHIP;100nF,20%,50V,Y5V,TP,2012	
....4	CP624	2401-001496	C-AL;47uF,20%,16V,GP,TP,5x7,5	
....4	CP625	2203-000218	C-CERAMIC,CHIP;100nF,20%,50V,Y5V,TP,2012	
....4	CP626	2401-002009	C-AL;100uF,20%,16V,GP,TP,6.3x7,5	
....4	CP627	2203-000218	C-CERAMIC,CHIP;100nF,20%,50V,Y5V,TP,2012	
....4	CP628	2401-002009	C-AL;100uF,20%,16V,GP,TP,6.3x7,5	
....4	CP629	2203-000218	C-CERAMIC,CHIP;100nF,20%,50V,Y5V,TP,2012	
....4	CP630	2203-000218	C-CERAMIC,CHIP;100nF,20%,50V,Y5V,TP,2012	
....4	CP631	2401-000598	C-AL;1uF,20%,50V,GP,TP,4x7,5	
....4	CP901	2404-001229	C-TA,CHIP;4.7uF,20%,25V,GP,TP,3528	
....4	CP902	2203-000218	C-CERAMIC,CHIP;100nF,20%,50V,Y5V,TP,2012	
....4	CP904	2203-001088	C-CERAMIC,CHIP;0.005nF,0.25pF,50V,NP0,TP	
....4	CP905	2203-000925	C-CERAMIC,CHIP;470NF,+80-20%,50V,Y5V,TP,	
....4	CP906	2203-000495	C-CERAMIC,CHIP;2.2nF,10%,50V,X7R,TP,2012	
....4	DP501	0403-001117	DIODE-ZENER;RLZ12B,5%,500mW,LL-34,TP	
....4	DP502	0403-001117	DIODE-ZENER;RLZ12B,5%,500mW,LL-34,TP	
....4	DP503	0403-001117	DIODE-ZENER;RLZ12B,5%,500mW,LL-34,TP	
....4	DP504	0403-000620	DIODE-ZENER;RLZ5.6B,5.6V,5.45-5.73V,400m	
....4	DP505	0403-000620	DIODE-ZENER;RLZ5.6B,5.6V,5.45-5.73V,400m	

Level	Loc. No.	Code No.	Description ; Specification	Remark
....4	DP601	0401-000133	DIODE-SWITCHING;RLS4148,100V,200mA,SOD-8	
....4	DP602	0403-000620	DIODE-ZENER;RLZ5.6B,5.6V,5.45-5.73V,400m	
....4	DP603	0401-000133	DIODE-SWITCHING;RLS4148,100V,200mA,SOD-8	
....4	DP604	0401-000160	DIODE-SWITCHING;ISS314,30V,100mA,USC,TP	
....4	DP605	0401-000160	DIODE-SWITCHING;ISS314,30V,100mA,USC,TP	
....4	DP606	0401-000133	DIODE-SWITCHING;RLS4148,100V,200mA,SOD-8	
....4	DP607	0403-000620	DIODE-ZENER;RLZ5.6B,5.6V,5.45-5.73V,400m	
....4	DP901	0401-000133	DIODE-SWITCHING;RLS4148,100V,200mA,SOD-8	
....4	DP902	0401-000133	DIODE-SWITCHING;RLS4148,100V,200mA,SOD-8	
....4	DP903	0401-000133	DIODE-SWITCHING;RLS4148,100V,200mA,SOD-8	
....4	DP904	0401-000133	DIODE-SWITCHING;RLS4148,100V,200mA,SOD-8	
....4	FP101	2901-001120	FILTER-EMI SMD;25V,100mA,-,-,3.2x1.6x1,T	
....4	FP102	2901-001120	FILTER-EMI SMD;25V,100mA,-,-,3.2x1.6x1,T	
....4	FP301	2901-001120	FILTER-EMI SMD;25V,100mA,-,-,3.2x1.6x1,T	
....4	FP901	2901-000226	FILTER-EMI SMD;25V,0.3A,-,100pF,3.2x1.25	
....4	FP902	2901-000226	FILTER-EMI SMD;25V,0.3A,-,100pF,3.2x1.25	
....4	FP903	2901-000226	FILTER-EMI SMD;25V,0.3A,-,100pF,3.2x1.25	
....4	FP904	2901-000226	FILTER-EMI SMD;25V,0.3A,-,100pF,3.2x1.25	
....4	FP905	2901-000226	FILTER-EMI SMD;25V,0.3A,-,100pF,3.2x1.25	
....4	FP906	2901-000226	FILTER-EMI SMD;25V,0.3A,-,100pF,3.2x1.25	
....4	FP907	2901-000226	FILTER-EMI SMD;25V,0.3A,-,100pF,3.2x1.25	
....4	FP908	2901-000226	FILTER-EMI SMD;25V,0.3A,-,100pF,3.2x1.25	
⚠ 4	ICP101	1204-001362	IC-VIDEO PROCESS;VPC3215C-B8,PLCC,43P,-,	
⚠ 4	ICP103	1205-001172	IC-INTERFACE;CIP3250A-B1,PLCC,68P,-,PLAS	
⚠ 4	ICP301	1204-001623	IC-VERTICAL PROCESSO;SDA9400,QFP,64P,-,P	
⚠ 4	ICP302	1203-001419	IC-VOLTAGE REGULATOR;4931,TO-252,3P,6.6x	
⚠ 4	ICP401	1002-001045	IC-D/A CONVERTER;9280,8BIT,PLCC,68P,-,-,	
⚠ 4	ICP501	1204-001550	IC-VIDEO PROCESS;CXA2101AQ,QFP,80P,-,PLA	
⚠ 4	ICP601	1204-001372	IC-HOR./VER.PROCESSO;SDA9361,QFP,44P,-,P	
⚠ 4	ICP901	1202-000001	IC-VOLTAGE COMP.;7533,TO-92,3P,-,SINGLE,	
....4	LP101	3301-001324	CORE-FERRITE BEAD;AB,15OHM,2X1.25X0.9MM,	S.N.A
....4	LP102	3301-001324	CORE-FERRITE BEAD;AB,15OHM,2X1.25X0.9MM,	S.N.A
....4	LP103	3301-001324	CORE-FERRITE BEAD;AB,15OHM,2X1.25X0.9MM,	S.N.A
....4	LP105	3301-001324	CORE-FERRITE BEAD;AB,15OHM,2X1.25X0.9MM,	S.N.A
....4	LP106	3301-001324	CORE-FERRITE BEAD;AB,15OHM,2X1.25X0.9MM,	S.N.A
....4	LP107	3301-001324	CORE-FERRITE BEAD;AB,15OHM,2X1.25X0.9MM,	S.N.A
....4	LP301	3301-001324	CORE-FERRITE BEAD;AB,15OHM,2X1.25X0.9MM,	S.N.A
....4	LP302	3301-001324	CORE-FERRITE BEAD;AB,15OHM,2X1.25X0.9MM,	S.N.A
....4	LP303	3301-001324	CORE-FERRITE BEAD;AB,15OHM,2X1.25X0.9MM,	S.N.A
....4	LP401	3301-001324	CORE-FERRITE BEAD;AB,15OHM,2X1.25X0.9MM,	S.N.A
....4	LP402	3301-001324	CORE-FERRITE BEAD;AB,15OHM,2X1.25X0.9MM,	S.N.A
....4	LP403	3301-001324	CORE-FERRITE BEAD;AB,15OHM,2X1.25X0.9MM,	S.N.A
....4	LP404	3301-001324	CORE-FERRITE BEAD;AB,15OHM,2X1.25X0.9MM,	S.N.A
....4	LP601	3301-001324	CORE-FERRITE BEAD;AB,15OHM,2X1.25X0.9MM,	S.N.A
....4	LP602	3301-001324	CORE-FERRITE BEAD;AB,15OHM,2X1.25X0.9MM,	S.N.A
....4	LP603	2703-001717	INDUCTOR-SMD;1.2uH,5%,3.2x2.5x2.2mm	
....4	LP901	3301-001186	CORE-FERRITE BEAD;AB,600ohm,3.2x1.6x1.3m	S.N.A
....4	LP902	3301-001186	CORE-FERRITE BEAD;AB,600ohm,3.2x1.6x1.3m	S.N.A
....4	LP903	3301-001324	CORE-FERRITE BEAD;AB,15OHM,2X1.25X0.9MM,	S.N.A
....4	LP904	3301-001184	CORE-FERRITE BEAD;AB,1.3kohm,4.5x3.2x1.3	S.N.A
....4	LP905	3301-001184	CORE-FERRITE BEAD;AB,1.3kohm,4.5x3.2x1.3	S.N.A
....4	LP906	3301-001184	CORE-FERRITE BEAD;AB,1.3kohm,4.5x3.2x1.3	S.N.A
....4	QP501	0501-000280	TR-SMALL SIGNAL;KSA1182,PNP,150mW,SOT-23	
....4	QP502	0501-000344	TR-SMALL SIGNAL;KSC1623-G,NPN,200mW,SOT-	
....4	QP503	0501-000344	TR-SMALL SIGNAL;KSC1623-G,NPN,200mW,SOT-	
....4	QP504	0501-000280	TR-SMALL SIGNAL;KSA1182,PNP,150mW,SOT-23	
....4	QP505	0501-000280	TR-SMALL SIGNAL;KSA1182,PNP,150mW,SOT-23	
....4	QP506	0501-000280	TR-SMALL SIGNAL;KSA1182,PNP,150mW,SOT-23	
....4	QP508	0501-000344	TR-SMALL SIGNAL;KSC1623-G,NPN,200mW,SOT-	
....4	QP602	0501-000344	TR-SMALL SIGNAL;KSC1623-G,NPN,200mW,SOT-	
....4	QP902	0501-000280	TR-SMALL SIGNAL;KSA1182,PNP,150mW,SOT-23	
....4	RP101	2007-000029	R-CHIP;0OHM,5%,1/10W,DA,TP,2012	
....4	RP102	2007-000947	R-CHIP;47OHM,5%,1/10W,DA,TP,2012	
....4	RP106	2007-000290	R-CHIP;100OHM,5%,1/10W,DA,TP,2012	
....4	RP112	2007-000290	R-CHIP;100OHM,5%,1/10W,DA,TP,2012	
....4	RP113	2007-000290	R-CHIP;100OHM,5%,1/10W,DA,TP,2012	
....4	RP114	2007-000290	R-CHIP;100OHM,5%,1/10W,DA,TP,2012	
....4	RP115	2007-000290	R-CHIP;100OHM,5%,1/10W,DA,TP,2012	
....4	RP117	2007-000029	R-CHIP;0OHM,5%,1/10W,DA,TP,2012	
....4	RP134	2007-000290	R-CHIP;100OHM,5%,1/10W,DA,TP,2012	
....4	RP135	2007-000290	R-CHIP;100OHM,5%,1/10W,DA,TP,2012	
....4	RP136	2011-000585	R-NETWORK;47ohm,5%,63mW,L,CHIP,8P,TP	
....4	RP137	2011-000585	R-NETWORK;47ohm,5%,63mW,L,CHIP,8P,TP	
....4	RP138	2011-000585	R-NETWORK;47ohm,5%,63mW,L,CHIP,8P,TP	
....4	RP139	2011-000585	R-NETWORK;47ohm,5%,63mW,L,CHIP,8P,TP	
....4	RP140	2011-000585	R-NETWORK;47ohm,5%,63mW,L,CHIP,8P,TP	
....4	RP141	2011-000585	R-NETWORK;47ohm,5%,63mW,L,CHIP,8P,TP	

Level	Loc. No.	Code No.	Description ; Specification	Remark
....4	RP142	2011-000585	R-NETWORK;47ohm,5%,63mW,L,CHIP,8P,TP	
....4	RP143	2011-000585	R-NETWORK;47ohm,5%,63mW,L,CHIP,8P,TP	
....4	RP153	2007-000401	R-CHIP;150OHM,5%,1/10W,DA,TP,2012	
....4	RP154	2007-000308	R-CHIP;10OHM,5%,1/10W,DA,TP,2012	
....4	RP155	2007-000947	R-CHIP;47OHM,5%,1/10W,DA,TP,2012	
....4	RP156	2007-000947	R-CHIP;47OHM,5%,1/10W,DA,TP,2012	
....4	RP157	2007-000947	R-CHIP;47OHM,5%,1/10W,DA,TP,2012	
....4	RP159	2007-001166	R-CHIP;75OHM,5%,1/10W,DA,TP,2012	
....4	RP161	2007-000290	R-CHIP;100OHM,5%,1/10W,DA,TP,2012	
....4	RP301	2007-000290	R-CHIP;100OHM,5%,1/10W,DA,TP,2012	
....4	RP302	2007-000290	R-CHIP;100OHM,5%,1/10W,DA,TP,2012	
....4	RP303	2007-000290	R-CHIP;100OHM,5%,1/10W,DA,TP,2012	
....4	RP304	2007-000290	R-CHIP;100OHM,5%,1/10W,DA,TP,2012	
....4	RP305	2007-000290	R-CHIP;100OHM,5%,1/10W,DA,TP,2012	
....4	RP401	2011-000585	R-NETWORK;47ohm,5%,63mW,L,CHIP,8P,TP	
....4	RP402	2011-000585	R-NETWORK;47ohm,5%,63mW,L,CHIP,8P,TP	
....4	RP403	2011-000585	R-NETWORK;47ohm,5%,63mW,L,CHIP,8P,TP	
....4	RP404	2011-000585	R-NETWORK;47ohm,5%,63mW,L,CHIP,8P,TP	
....4	RP405	2007-000290	R-CHIP;100OHM,5%,1/10W,DA,TP,2012	
....4	RP406	2007-000290	R-CHIP;100OHM,5%,1/10W,DA,TP,2012	
....4	RP407	2007-000290	R-CHIP;100OHM,5%,1/10W,DA,TP,2012	
....4	RP408	2007-001055	R-CHIP;6.2KOHM,5%,1/10W,DA,TP,2012	
....4	RP409	2007-000401	R-CHIP;150OHM,5%,1/10W,DA,TP,2012	
....4	RP411	2007-001166	R-CHIP;75OHM,5%,1/10W,DA,TP,2012	
....4	RP412	2007-001166	R-CHIP;75OHM,5%,1/10W,DA,TP,2012	
....4	RP413	2007-000401	R-CHIP;150OHM,5%,1/10W,DA,TP,2012	
....4	RP415	2007-001166	R-CHIP;75OHM,5%,1/10W,DA,TP,2012	
....4	RP416	2007-001166	R-CHIP;75OHM,5%,1/10W,DA,TP,2012	
....4	RP417	2007-000380	R-CHIP;13KOHM,5%,1/10W,DA,TP,2012	
....4	RP418	2007-000401	R-CHIP;150OHM,5%,1/10W,DA,TP,2012	
....4	RP419	2007-001166	R-CHIP;75OHM,5%,1/10W,DA,TP,2012	
....4	RP421	2007-001166	R-CHIP;75OHM,5%,1/10W,DA,TP,2012	
....4	RP422	2007-000300	R-CHIP;10KOHM,5%,1/10W,DA,TP,2012	
....4	RP423	2007-000401	R-CHIP;150OHM,5%,1/10W,DA,TP,2012	
....4	RP501	2007-000029	R-CHIP;0OHM,5%,1/10W,DA,TP,2012	
....4	RP502	2007-000029	R-CHIP;0OHM,5%,1/10W,DA,TP,2012	
....4	RP503	2007-000029	R-CHIP;0OHM,5%,1/10W,DA,TP,2012	
....4	RP504	2007-000030	R-CHIP;560OHM,5%,1/10W,DA,TP,2012	
....4	RP505	2007-000572	R-CHIP;220OHM,5%,1/10W,DA,TP,2012	
....4	RP506	2007-000493	R-CHIP;2.2KOHM,5%,1/10W,DA,TP,2012	
....4	RP507	2007-001166	R-CHIP;75OHM,5%,1/10W,DA,TP,2012	
....4	RP509	2007-000931	R-CHIP;470OHM,5%,1/10W,DA,TP,2012	
....4	RP510	2007-000938	R-CHIP;47KOHM,1%,1/10W,DA,TP,2012	
....4	RP513	2007-000290	R-CHIP;100OHM,5%,1/10W,DA,TP,2012	
....4	RP514	2007-000210	R-CHIP;1.1KOHM,5%,1/10W,DA,TP,2012	
....4	RP515	2007-000468	R-CHIP;1KOHM,5%,1/10W,DA,TP,2012	
....4	RP516	2007-000468	R-CHIP;1KOHM,5%,1/10W,DA,TP,2012	
....4	RP517	2007-000290	R-CHIP;100OHM,5%,1/10W,DA,TP,2012	
....4	RP518	2007-000210	R-CHIP;1.1KOHM,5%,1/10W,DA,TP,2012	
....4	RP519	2007-000290	R-CHIP;100OHM,5%,1/10W,DA,TP,2012	
....4	RP521	2007-000210	R-CHIP;1.1KOHM,5%,1/10W,DA,TP,2012	
....4	RP522	2007-000290	R-CHIP;100OHM,5%,1/10W,DA,TP,2012	
....4	RP523	2007-000210	R-CHIP;1.1KOHM,5%,1/10W,DA,TP,2012	
....4	RP524	2007-000290	R-CHIP;100OHM,5%,1/10W,DA,TP,2012	
....4	RP525	2007-000290	R-CHIP;100OHM,5%,1/10W,DA,TP,2012	
....4	RP526	2007-000210	R-CHIP;1.1KOHM,5%,1/10W,DA,TP,2012	
....4	RP527	2007-000290	R-CHIP;100OHM,5%,1/10W,DA,TP,2012	
....4	RP528	2007-000290	R-CHIP;100OHM,5%,1/10W,DA,TP,2012	
....4	RP529	2007-000210	R-CHIP;1.1KOHM,5%,1/10W,DA,TP,2012	
....4	RP530	2007-000290	R-CHIP;100OHM,5%,1/10W,DA,TP,2012	
....4	RP537	2007-000689	R-CHIP;3.3MOHM,5%,1/10W,DA,TP,2012	
....4	RP542	2007-000290	R-CHIP;100OHM,5%,1/10W,DA,TP,2012	
....4	RP543	2007-000290	R-CHIP;100OHM,5%,1/10W,DA,TP,2012	
....4	RP544	2007-000029	R-CHIP;0OHM,5%,1/10W,DA,TP,2012	
....4	RP546	2007-000290	R-CHIP;100OHM,5%,1/10W,DA,TP,2012	
....4	RP547	2007-000290	R-CHIP;100OHM,5%,1/10W,DA,TP,2012	
....4	RP549	2007-000671	R-CHIP;2KOHM,5%,1/10W,DA,TP,2012	
....4	RP550	2007-000290	R-CHIP;100OHM,5%,1/10W,DA,TP,2012	
....4	RP553	2007-000290	R-CHIP;100OHM,5%,1/10W,DA,TP,2012	
....4	RP554	2007-000290	R-CHIP;100OHM,5%,1/10W,DA,TP,2012	
....4	RP555	2007-000582	R-CHIP;22KOHM,1%,1/10W,DA,TP,2012	
....4	RP556	2007-000290	R-CHIP;100OHM,5%,1/10W,DA,TP,2012	
....4	RP560	2007-000468	R-CHIP;1KOHM,5%,1/10W,DA,TP,2012	
....4	RP562	2007-000468	R-CHIP;1KOHM,5%,1/10W,DA,TP,2012	
....4	RP565	2007-000029	R-CHIP;0OHM,5%,1/10W,DA,TP,2012	
....4	RP566	2007-000029	R-CHIP;0OHM,5%,1/10W,DA,TP,2012	
....4	RP567	2007-000029	R-CHIP;0OHM,5%,1/10W,DA,TP,2012	
....4	RP568	2007-000029	R-CHIP;0OHM,5%,1/10W,DA,TP,2012	
....4	RP569	2007-000029	R-CHIP;0OHM,5%,1/10W,DA,TP,2012	
....4	RP570	2007-000300	R-CHIP;10KOHM,5%,1/10W,DA,TP,2012	
....4	RP571	2007-000290	R-CHIP;100OHM,5%,1/10W,DA,TP,2012	
....4	RP601	2007-000290	R-CHIP;100OHM,5%,1/10W,DA,TP,2012	
....4	RP602	2007-000290	R-CHIP;100OHM,5%,1/10W,DA,TP,2012	
....4	RP603	2007-001208	R-CHIP;82KOHM,5%,1/10W,DA,TP,2012	
....4	RP604	2007-000947	R-CHIP;47OHM,5%,1/10W,DA,TP,2012	
....4	RP605	2007-000518	R-CHIP;2.7KOHM,5%,1/10W,DA,TP,2012	
....4	RP606	2007-000518	R-CHIP;2.7KOHM,5%,1/10W,DA,TP,2012	
....4	RP609	2007-000872	R-CHIP;4.7KOHM,5%,1/10W,DA,TP,2012	
....4	RP611	2007-000468	R-CHIP;1KOHM,5%,1/10W,DA,TP,2012	
....4	RP613	2007-000941	R-CHIP;47KOHM,5%,1/10W,DA,TP,2012	
....4	RP614	2007-000001	R-CHIP;68KOHM,5%,1/10W,DA,TP,2012	
....4	RP619	2007-000468	R-CHIP;1KOHM,5%,1/10W,DA,TP,2012	
....4	RP620	2007-000947	R-CHIP;47OHM,5%,1/10W,DA,TP,2012	
....4	RP621	2007-000947	R-CHIP;47OHM,5%,1/10W,DA,TP,2012	
....4	RP622	2007-000468	R-CHIP;1KOHM,5%,1/10W,DA,TP,2012	
....4	RP623	2007-000822	R-CHIP;390OHM,5%,1/10W,DA,TP,2012	
....4	RP624	2007-000290	R-CHIP;100OHM,5%,1/10W,DA,TP,2012	
....4	RP625	2007-000872	R-CHIP;4.7KOHM,5%,1/10W,DA,TP,2012	
....4	RP626	2007-000931	R-CHIP;470OHM,5%,1/10W,DA,TP,2012	
....4	RP627	2007-000872	R-CHIP;4.7KOHM,5%,1/10W,DA,TP,2012	
....4	RP628	2007-000267	R-CHIP;1.8KOHM,5%,1/10W,DA,TP,2012	
....4	RP629	2007-000872	R-CHIP;4.7KOHM,5%,1/10W,DA,TP,2012	
....4	RP630	2007-000468	R-CHIP;1KOHM,5%,1/10W,DA,TP,2012	
....4	RP631	2007-000872	R-CHIP;4.7KOHM,5%,1/10W,DA,TP,2012	
....4	RP709	2007-000029	R-CHIP;0OHM,5%,1/10W,DA,TP,2012	
....4	RP719	2007-000029	R-CHIP;0OHM,5%,1/10W,DA,TP,2012	
....4	RP727	2007-000029	R-CHIP;0OHM,5%,1/10W,DA,TP,2012	
....4	RP735	2007-000029	R-CHIP;0OHM,5%,1/10W,DA,TP,2012	
....4	RP736	2007-000029	R-CHIP;0OHM,5%,1/10W,DA,TP,2012	
....4	RP737	2007-000029	R-CHIP;0OHM,5%,1/10W,DA,TP,2012	
....4	RP738	2007-000029	R-CHIP;0OHM,5%,1/10W,DA,TP,2012	
....4	RP901	2007-000290	R-CHIP;100OHM,5%,1/10W,DA,TP,2012	
....4	RP904	2007-000029	R-CHIP;0OHM,5%,1/10W,DA,TP,2012	
....4	RP907	2007-000290	R-CHIP;100OHM,5%,1/10W,DA,TP,2012	
....4	RP908	2007-000290	R-CHIP;100OHM,5%,1/10W,DA,TP,2012	
....4	RP912	2007-000290	R-CHIP;100OHM,5%,1/10W,DA,TP,2012	
....4	RP913	2007-000290	R-CHIP;100OHM,5%,1/10W,DA,TP,2012	
....4	RP914	2007-000290	R-CHIP;100OHM,5%,1/10W,DA,TP,2012	
....4	RP915	2007-000290	R-CHIP;100OHM,5%,1/10W,DA,TP,2012	
....4	RP916	2007-000290	R-CHIP;100OHM,5%,1/10W,DA,TP,2012	
....4	RP917	2007-000290	R-CHIP;100OHM,5%,1/10W,DA,TP,2012	
....4	RP918	2007-000290	R-CHIP;100OHM,5%,1/10W,DA,TP,2012	
....4	RP920	2007-000290	R-CHIP;100OHM,5%,1/10W,DA,TP,2012	
....4	RP921	2007-000290	R-CHIP;100OHM,5%,1/10W,DA,TP,2012	
....4	RP924	2007-000029	R-CHIP;0OHM,5%,1/10W,DA,TP,2012	
....4	RP925	2007-000290	R-CHIP;100OHM,5%,1/10W,DA,TP,2012	
....4	RP926	2007-000290	R-CHIP;100OHM,5%,1/10W,DA,TP,2012	
....4	RP927	2007-000290	R-CHIP;100OHM,5%,1/10W,DA,TP,2012	
....4	RP929	2007-000029	R-CHIP;0OHM,5%,1/10W,DA,TP,2012	
....4	RP931	2007-000029	R-CHIP;0OHM,5%,1/10W,DA,TP,2012	
....4	RP933	2007-000029	R-CHIP;0OHM,5%,1/10W,DA,TP,2012	
....4	RP935	2007-000029	R-CHIP;0OHM,5%,1/10W,DA,TP,2012	
....4	RP936	2007-000468	R-CHIP;1KOHM,5%,1/10W,DA,TP,2012	
....4	RP943	2007-000468	R-CHIP;1KOHM,5%,1/10W,DA,TP,2012	
....4	RP944	2007-000941	R-CHIP;47KOHM,5%,1/10W,DA,TP,2012	
....4	RP945	2007-000290	R-CHIP;100OHM,5%,1/10W,DA,TP,2012	
....4	RP980	2007-000029	R-CHIP;0OHM,5%,1/10W,DA,TP,2012	
....4	XP101	2801-003432	CRYSTAL-UNIT;20.25MHZ,30PPM,28-AAM,13PF,	
....4		AA41-00233B	PCB-PROSCAN;SVP-53J5P,FR-4,4L,B,1.6T,245	S.N.A
...3		AA63-40272A	SHIELD-CASE;-,SPTE,T0.5,-,CX724AHD	S.N.A
..2		AA95-00529A	ASSY-PCB,PIP;-,SP43J5HP,J51A,-,-,-	
...3	CNP01	3711-002709	CONNECTOR-HEADER;NOWALL,12P,1R,2.5MM,ANG	
...3	CNP03	3711-002709	CONNECTOR-HEADER;NOWALL,12P,1R,2.5MM,ANG	
⚠ ...3	ICP101	1204-000530	IC-PAL/NTSC DECODER;TDA9160A,DIP,32P,400	
⚠ ...3	ICP102	1204-000560	IC-DEMODULATOR;TDA9815,DIP,32P,400MIL,PL	
...3	RP126	2103-000665	VR-SEMI;20Kohm,25%,1/5W,SIDE	
⚠ ...3	TP101	AA26-10004E	TRANS-IF;-,7MG,VIF,-,7mm,8pF,116.7MHz,S	
...3	ZP102	2904-000253	FILTER-SAW AV;38.9MHz,DIP10K,ST,18dB,B/G	
...3		AA99-20066Z	ASSY-PCB SUB,AUTO; AA95-00529A ,V	S.N.A
....4	CP101	2203-000221	C-CERAMIC,CHIP;100nF,20%,50V,Y5V,TP,3216	
....4	CP102	2401-000922	C-AL;22uF,20%,16V,GP,TP,5x5,5	
....4	CP103	2203-000429	C-CERAMIC,CHIP;0.018nF,5%,50V,NP0,TP,201	

Level	Loc. No.	Code No.	Description ; Specification	Remark
....4	CP104	2203-000218	C-CERAMIC,CHIP;100nF,20%,50V,Y5V,TP,2012	
....4	CP105	2203-000717	C-CERAMIC,CHIP;3.3nF,10%,50V,X7R,TP,3216	
....4	CP106	2203-000221	C-CERAMIC,CHIP;100nF,20%,50V,Y5V,TP,3216	
....4	CP107	2203-000221	C-CERAMIC,CHIP;100nF,20%,50V,Y5V,TP,3216	
....4	CP108	2203-000221	C-CERAMIC,CHIP;100nF,20%,50V,Y5V,TP,3216	
....4	CP109	2401-001840	C-AL;100uF,20%,16V,GP,TP,6.3x11,5	
....4	CP110	2203-000221	C-CERAMIC,CHIP;100nF,20%,50V,Y5V,TP,3216	
....4	CP111	2203-000716	C-CERAMIC,CHIP;3.3nF,10%,50V,X7R,TP,2012	
....4	CP112	2401-000660	C-AL;2.2uF,20%,50V,GP,TP,5x11,5	
....4	CP114	2203-000221	C-CERAMIC,CHIP;100nF,20%,50V,Y5V,TP,3216	
....4	CP115	2203-000221	C-CERAMIC,CHIP;100nF,20%,50V,Y5V,TP,3216	
....4	CP116	2203-000753	C-CERAMIC,CHIP;330nF,+80-20%,50V,Y5V,TP,	
....4	CP117	2401-002144	C-AL;47uF,20%,16V,GP,TP,5x11,5	
....4	CP118	2203-000221	C-CERAMIC,CHIP;100nF,20%,50V,Y5V,TP,3216	
....4	CP119	2201-000692	C-CERAMIC,DISC;0.008nF,0.5pF,50V,UJ,TP,4	
....4	CP120	2203-000578	C-CERAMIC,CHIP;220nF,20%,50V,Y5V,TP,3216	
....4	CP121	2401-000660	C-AL;2.2uF,20%,50V,GP,TP,5x11,5	
....4	CP123	2203-000260	C-CERAMIC,CHIP;10nF,10%,50V,X7R,TP,2012	
....4	CP124	2401-000660	C-AL;2.2uF,20%,50V,GP,TP,5x11,5	
....4	CP125	2203-000260	C-CERAMIC,CHIP;10nF,10%,50V,X7R,TP,2012	
....4	CP126	2401-001840	C-AL;100uF,20%,16V,GP,TP,6.3x11,5	
....4	CP127	2203-000221	C-CERAMIC,CHIP;100nF,20%,50V,Y5V,TP,3216	
....4	CP129	2203-000260	C-CERAMIC,CHIP;10nF,10%,50V,X7R,TP,2012	
....4	CP130	2203-000239	C-CERAMIC,CHIP;0.1nF,5%,50V,NP0,TP,2012	
....4	CP131	2201-000692	C-CERAMIC,DISC;0.008nF,0.5pF,50V,UJ,TP,4	
....4	CP132	2203-000239	C-CERAMIC,CHIP;0.1nF,5%,50V,NP0,TP,2012	
....4	CP133	2203-000221	C-CERAMIC,CHIP;100nF,20%,50V,Y5V,TP,3216	
....4	CP134	2401-001840	C-AL;100uF,20%,16V,GP,TP,6.3x11,5	
....4	CP135	2401-002144	C-AL;47uF,20%,16V,GP,TP,5x11,5	
....4	CP136	2203-000260	C-CERAMIC,CHIP;10nF,10%,50V,X7R,TP,2012	
....4	CP137	2203-000938	C-CERAMIC,CHIP;0.47nF,5%,50V,NP0,TP,2012	
....4	CP142	2401-000199	C-AL;1000uF,20%,6.3V,GP,TP,10x12.5,	
....4	CP143	2401-002144	C-AL;47uF,20%,16V,GP,TP,5x11,5	
....4	CP144	2203-000221	C-CERAMIC,CHIP;100nF,20%,50V,Y5V,TP,3216	
....4	CP145	2203-000221	C-CERAMIC,CHIP;100nF,20%,50V,Y5V,TP,3216	
....4	CP201	2203-000325	C-CERAMIC,CHIP;12nF,10%,50V,X7R,TP,3216,	
....4	CP203	2401-002144	C-AL;47uF,20%,16V,GP,TP,5x11,5	
....4	CP204	2203-000221	C-CERAMIC,CHIP;100nF,20%,50V,Y5V,TP,3216	
....4	CP205	2401-001840	C-AL;100uF,20%,16V,GP,TP,6.3x11,5	
....4	CP206	2203-000221	C-CERAMIC,CHIP;100nF,20%,50V,Y5V,TP,3216	
....4	CP207	2401-001840	C-AL;100uF,20%,16V,GP,TP,6.3x11,5	
....4	CP208	2203-000221	C-CERAMIC,CHIP;100nF,20%,50V,Y5V,TP,3216	
....4	CP209	2401-001914	C-AL;1uF,20%,50V,BP,TP,5x11,5	
....4	CP210	2401-001840	C-AL;100uF,20%,16V,GP,TP,6.3x11,5	
....4	CP211	2401-000603	C-AL;1uF,20%,50V,GP,TP,5x11,5	
....4	CP213	2401-000603	C-AL;1uF,20%,50V,GP,TP,5x11,5	
....4	CP214	2203-000578	C-CERAMIC,CHIP;220nF,20%,50V,Y5V,TP,3216	
....4	CP215	2401-000603	C-AL;1uF,20%,50V,GP,TP,5x11,5	
....4	CP216	2203-000221	C-CERAMIC,CHIP;100nF,20%,50V,Y5V,TP,3216	
....4	CP217	2203-000578	C-CERAMIC,CHIP;220nF,20%,50V,Y5V,TP,3216	
....4	CP218	2203-002085	C-CERAMIC,CHIP;56nF,10%,50V,X7R,TP,2012,	
....4	CP219	2203-000495	C-CERAMIC,CHIP;2.2nF,10%,50V,X7R,TP,2012	
....4	CP220	2203-000578	C-CERAMIC,CHIP;220nF,20%,50V,Y5V,TP,3216	
....4	CP221	2203-000221	C-CERAMIC,CHIP;100nF,20%,50V,Y5V,TP,3216	
....4	CP301	2401-001840	C-AL;100uF,20%,16V,GP,TP,6.3x11,5	
....4	CP302	2203-000221	C-CERAMIC,CHIP;100nF,20%,50V,Y5V,TP,3216	
....4	CP303	2401-001840	C-AL;100uF,20%,16V,GP,TP,6.3x11,5	
....4	CP304	2203-000221	C-CERAMIC,CHIP;100nF,20%,50V,Y5V,TP,3216	
....4	CP305	2203-000389	C-CERAMIC,CHIP;0.015nF,5%,50V,NP0,TP,201	
....4	CP306	2203-000389	C-CERAMIC,CHIP;0.015nF,5%,50V,NP0,TP,201	
....4	DP101	0401-000160	DIODE-SWITCHING;ISS314,30V,100mA,USC,TP	
....4	DP103	0403-000720	DIODE-ZENER;MTZJ9.1B,9.1V,8.57-9.01V,500	
....4	DP105	0401-000160	DIODE-SWITCHING;ISS314,30V,100mA,USC,TP	
....4	DP201	0403-000334	DIODE-ZENER;UZ2.7BSA,2.7V,2.54-2.75V,500	
⚠ 4	ICP103	AA13-20004A	IC-HYBRID;-,PAP102T,SIP,6P,PRE-AMP,TP	
⚠ 4	ICP105	1204-000635	IC-PICTURE PROCESS;SDA9189X,SOP,32P,350M	
⚠ 4	ICP201	1002-000206	IC-A/D CONVERTER;SDA9187-2X,6BIT,SOP,28P	
....4	LP102	2701-000219	INDUCTOR-AXIAL;820nH,10%,2.5x3.4mm	
....4	LP103	2701-000114	INDUCTOR-AXIAL;10uH,10%,2.5x3.4mm	
....4	LP104	2701-000114	INDUCTOR-AXIAL;10uH,10%,2.5x3.4mm	
....4	LP105	2701-000114	INDUCTOR-AXIAL;10uH,10%,2.5x3.4mm	
....4	LP201	2701-000197	INDUCTOR-AXIAL;5.6uH,10%,2.5x3.4mm	
....4	LP301	2701-000114	INDUCTOR-AXIAL;10uH,10%,2.5x3.4mm	
....4	PCB	AA41-11003A	PCB-PIP;SCT53A,2L,FR-4,330x245x1.6T,A6	S.N.A
....4	QP104	0501-000342	TR-SMALL SIGNAL;KSC1623-Y,NPN,200mW,SOT-	
....4	QP105	0501-000342	TR-SMALL SIGNAL;KSC1623-Y,NPN,200mW,SOT-	
....4	QP106	0501-000342	TR-SMALL SIGNAL;KSC1623-Y,NPN,200mW,SOT-	

Level	Loc. No.	Code No.	Description ; Specification	Remark
....4	QP201	0501-000342	TR-SMALL SIGNAL;KSC1623-Y,NPN,200mW,SOT-	
....4	QP202	0501-000342	TR-SMALL SIGNAL;KSC1623-Y,NPN,200mW,SOT-	
....4	QP203	0501-000280	TR-SMALL SIGNAL;KSA1182,PNP,150mW,SOT-23	
....4	QP204	0501-000342	TR-SMALL SIGNAL;KSC1623-Y,NPN,200mW,SOT-	
....4	QP205	0501-000342	TR-SMALL SIGNAL;KSC1623-Y,NPN,200mW,SOT-	
....4	QP206	0501-000342	TR-SMALL SIGNAL;KSC1623-Y,NPN,200mW,SOT-	
....4	QP302	0501-000342	TR-SMALL SIGNAL;KSC1623-Y,NPN,200mW,SOT-	
....4	QP303	0501-000280	TR-SMALL SIGNAL;KSA1182,PNP,150mW,SOT-23	
....4	QP304	0501-000280	TR-SMALL SIGNAL;KSA1182,PNP,150mW,SOT-23	
....4	QP305	0501-000280	TR-SMALL SIGNAL;KSA1182,PNP,150mW,SOT-23	
....4	RC129	2007-000586	R-CHIP;22KOHM,5%,1/10W,DA,TP,2012	
....4	RP101	2007-001208	R-CHIP;82KOHM,5%,1/10W,DA,TP,2012	
....4	RP104	2007-000468	R-CHIP;1KOHM,5%,1/10W,DA,TP,2012	
....4	RP105	2007-000328	R-CHIP;11KOHM,5%,1/10W,DA,TP,2012	
....4	RP106	2007-000774	R-CHIP;33KOHM,5%,1/10W,DA,TP,2012	
....4	RP107	2007-000409	R-CHIP;15KOHM,5%,1/10W,DA,TP,2012	
....4	RP108	2007-000493	R-CHIP;2.2KOHM,5%,1/10W,DA,TP,2012	
....4	RP109	2007-000830	R-CHIP;39KOHM,5%,1/10W,DA,TP,2012	
....4	RP110	2007-000300	R-CHIP;10KOHM,5%,1/10W,DA,TP,2012	
....4	RP111	2007-000872	R-CHIP;4.7KOHM,5%,1/10W,DA,TP,2012	
....4	RP112	2007-000931	R-CHIP;470OHM,5%,1/10W,DA,TP,2012	
....4	RP113	2007-000774	R-CHIP;33KOHM,5%,1/10W,DA,TP,2012	
....4	RP114	2007-000290	R-CHIP;100OHM,5%,1/10W,DA,TP,2012	
....4	RP115	2007-000290	R-CHIP;100OHM,5%,1/10W,DA,TP,2012	
....4	RP116	2007-000493	R-CHIP;2.2KOHM,5%,1/10W,DA,TP,2012	
....4	RP118	2001-000117	R-CARBON(S);68OHM,5%,1/2W,AA,TP,2.4X6.4M	
....4	RP119	2007-000282	R-CHIP;100KOHM,5%,1/10W,DA,TP,2012	
....4	RP122	2007-000300	R-CHIP;10KOHM,5%,1/10W,DA,TP,2012	
....4	RP123	2007-000941	R-CHIP;47KOHM,5%,1/10W,DA,TP,2012	
....4	RP124	2007-000941	R-CHIP;47KOHM,5%,1/10W,DA,TP,2012	
....4	RP125	2007-000401	R-CHIP;150OHM,5%,1/10W,DA,TP,2012	
....4	RP127	2007-000030	R-CHIP;560OHM,5%,1/10W,DA,TP,2012	
....4	RP128	2007-000941	R-CHIP;47KOHM,5%,1/10W,DA,TP,2012	
....4	RP130	2007-000872	R-CHIP;4.7KOHM,5%,1/10W,DA,TP,2012	
....4	RP131	2007-000586	R-CHIP;22KOHM,5%,1/10W,DA,TP,2012	
....4	RP132	2007-000468	R-CHIP;1KOHM,5%,1/10W,DA,TP,2012	
....4	RP135	2007-000468	R-CHIP;1KOHM,5%,1/10W,DA,TP,2012	
....4	RP136	2007-000872	R-CHIP;4.7KOHM,5%,1/10W,DA,TP,2012	
....4	RP137	2007-001039	R-CHIP;56KOHM,5%,1/10W,DA,TP,2012	
....4	RP138	2007-000586	R-CHIP;22KOHM,5%,1/10W,DA,TP,2012	
....4	RP140	2007-000029	R-CHIP;0OHM,5%,1/10W,DA,TP,2012	
....4	RP201	2007-001039	R-CHIP;56KOHM,5%,1/10W,DA,TP,2012	
....4	RP202	2007-000401	R-CHIP;150OHM,5%,1/10W,DA,TP,2012	
....4	RP203	2007-000703	R-CHIP;3.6KOHM,5%,1/10W,DA,TP,2012	
....4	RP204	2007-000593	R-CHIP;22OHM,5%,1/10W,DA,TP,2012	
....4	RP205	2007-000477	R-CHIP;1MOHM,5%,1/10W,DA,TP,2012	
....4	RP206	2007-000931	R-CHIP;470OHM,5%,1/10W,DA,TP,2012	
....4	RP207	2007-001009	R-CHIP;51KOHM,5%,1/10W,DA,TP,2012	
....4	RP208	2007-000774	R-CHIP;33KOHM,5%,1/10W,DA,TP,2012	
....4	RP209	2007-000401	R-CHIP;150OHM,5%,1/10W,DA,TP,2012	
....4	RP210	2007-000221	R-CHIP;1.2KOHM,5%,1/10W,DA,TP,2012	
....4	RP211	2007-001001	R-CHIP;510OHM,5%,1/10W,DA,TP,2012	
....4	RP212	2007-000931	R-CHIP;470OHM,5%,1/10W,DA,TP,2012	
....4	RP213	2007-000872	R-CHIP;4.7KOHM,5%,1/10W,DA,TP,2012	
....4	RP215	2007-000872	R-CHIP;4.7KOHM,5%,1/10W,DA,TP,2012	
....4	RP216	2007-000872	R-CHIP;4.7KOHM,5%,1/10W,DA,TP,2012	
....4	RP217	2007-000409	R-CHIP;15KOHM,5%,1/10W,DA,TP,2012	
....4	RP301	2007-000290	R-CHIP;100OHM,5%,1/10W,DA,TP,2012	
....4	RP303	2007-000468	R-CHIP;1KOHM,5%,1/10W,DA,TP,2012	
....4	RP304	2007-000290	R-CHIP;100OHM,5%,1/10W,DA,TP,2012	
....4	RP307	2007-000518	R-CHIP;2.7KOHM,5%,1/10W,DA,TP,2012	
....4	RP308	2007-000401	R-CHIP;150OHM,5%,1/10W,DA,TP,2012	
....4	RP309	2007-000931	R-CHIP;470OHM,5%,1/10W,DA,TP,2012	
....4	RP310	2007-000931	R-CHIP;470OHM,5%,1/10W,DA,TP,2012	
....4	RP311	2007-000931	R-CHIP;470OHM,5%,1/10W,DA,TP,2012	
....4	RP312	2007-000300	R-CHIP;10KOHM,5%,1/10W,DA,TP,2012	
....4	RP313	2007-001155	R-CHIP;750OHM,5%,1/10W,DA,TP,2012	
....4	RP314	2007-001155	R-CHIP;750OHM,5%,1/10W,DA,TP,2012	
....4	RP315	2007-001155	R-CHIP;750OHM,5%,1/10W,DA,TP,2012	
....4	RP316	2001-001146	R-CARBON(S);4.7OHM,5%,1/2W,AA,TP,2.4X6.4	
....4	RP317	2001-001146	R-CARBON(S);4.7OHM,5%,1/2W,AA,TP,2.4X6.4	
....4	XP101	2801-000235	CRYSTAL-UNIT;3.579545MHz,40ppm,28-AAM,S,	
....4	XP102	2801-000274	CRYSTAL-UNIT;4.433619MHZ,30PPM,28-AAM,20	
....4	XP301	2802-000121	RESONATOR-CERAMIC;20.48MHz,0.5%,TP,10.0x	
...3		AA63-40013A	SHIELD-CASE;-,SPTE,T0.5,SCT51A,WZ74,-	S.N.A
...3		0202-000187	SOLDER-WIRE FLUX;-,RS60S,D1.2,63Sn/37Pb	S.N.A
..2		AA95-00644A	ASSY-PCB,TTX;-,SP43J5HF,J51A,-,-,ENG VER	

Level	Loc. No.	Code No.	Description ; Specification	Remark
...3	CNT01	3711-002709	CONNECTOR-HEADER;NOWALL,12P,1R,2.5MM,ANG	
...3	CNT02	3711-002707	CONNECTOR-HEADER;NOWALL,9P,1R,2.5mm,ANGL	
⚠ ...3	ICT01	AA13-00046A	IC-MCU;SDA545x-OTP 13B,OTP,ST,64K,-,D	
⚠ ...3	ICT02	1103-001197	IC-EEPROM;24C04-PC C,256X8Bit,DIP,8P,300	
⚠ ...3	ICT04	1001-000223	IC-VIDEO SWITCH;TEA5114A,-,DIP,16P,334MI	
...3	XT01	2801-000724	CRYSTAL-UNIT;6MHz,50ppm,28-AAM,20pF,40oh	
...3		AA99-20079Q	ASSY-PCB SUB,AUTO; AA99-30187G ,V	S.N.A
....4	CT01	2401-002009	C-AL;100uF,20%,16V,GP,TP,6.3x7,5	
....4	CT02	2203-000218	C-CERAMIC,CHIP;100nF,20%,50V,Y5V,TP,2012	
....4	CT03	2203-000218	C-CERAMIC,CHIP;100nF,20%,50V,Y5V,TP,2012	
....4	CT04	2203-000818	C-CERAMIC,CHIP;0.033nF,5%,50V,NP0,TP,201	
....4	CT05	2203-000818	C-CERAMIC,CHIP;0.033nF,5%,50V,NP0,TP,201	
....4	CT06	2401-000486	C-AL;10uF,20%,50V,GP,TP,6.3x7mm,5	
....4	CT07	2203-000802	C-CERAMIC,CHIP;33nF,10%,50V,X7R,TP,2012	
....4	CT08	2401-002009	C-AL;100uF,20%,16V,GP,TP,6.3x7,5	
....4	CT09	2203-000218	C-CERAMIC,CHIP;100nF,20%,50V,Y5V,TP,2012	
....4	CT10	2203-000260	C-CERAMIC,CHIP;10nF,10%,50V,X7R,TP,2012	
....4	CT12	2203-000802	C-CERAMIC,CHIP;33nF,10%,50V,X7R,TP,2012	
....4	CT13	2401-002009	C-AL;100uF,20%,16V,GP,TP,6.3x7,5	
....4	CT14	2203-000218	C-CERAMIC,CHIP;100nF,20%,50V,Y5V,TP,2012	
....4	CT15	2203-000575	C-CERAMIC,CHIP;220NF,10%,25V,X7R,TP,2012	
....4	CT16	2203-000575	C-CERAMIC,CHIP;220NF,10%,25V,X7R,TP,2012	
....4	CT17	2203-000575	C-CERAMIC,CHIP;220NF,10%,25V,X7R,TP,2012	
....4	CT18	2203-000575	C-CERAMIC,CHIP;220NF,10%,25V,X7R,TP,2012	
....4	CT19	2203-000575	C-CERAMIC,CHIP;220NF,10%,25V,X7R,TP,2012	
....4	CT20	2203-000575	C-CERAMIC,CHIP;220NF,10%,25V,X7R,TP,2012	
....4	CT21	2401-000302	C-AL;100uF,20%,25V,GP,TP,6.3x11,5	
....4	CT22	2203-000218	C-CERAMIC,CHIP;100nF,20%,50V,Y5V,TP,2012	
....4	CT23	2401-002009	C-AL;100uF,20%,16V,GP,TP,6.3x7,5	
....4	CT24	2203-000218	C-CERAMIC,CHIP;100nF,20%,50V,Y5V,TP,2012	
....4	DZT01	0403-001016	DIODE-ZENER;RLZ6.2B,6.2V,5.96-6.27V,400m	
....4	DZT02	0403-001117	DIODE-ZENER;RLZ12B,5%,500mW,LL-34,TP	
⚠ 4	ICT03	1203-000515	IC-VOL. DETECTOR;7042,TO-92,3P,177MIL,PL	
⚠ 4	ICT05	0801-000410	IC-CMOS LOGIC;74HC32,OR GATE,SOP,14P,150	
....4	JT03	2007-000029	R-CHIP;0OHM,5%,1/10W,DA,TP,2012	
....4	LT01	2702-001094	INDUCTOR-RADIAL;10uH,10%,6x4mm	
....4	LT02	2702-001094	INDUCTOR-RADIAL;10uH,10%,6x4mm	
....4	LT03	2702-001094	INDUCTOR-RADIAL;10uH,10%,6x4mm	
....4	LT04	2702-001094	INDUCTOR-RADIAL;10uH,10%,6x4mm	
....4	LT05	2702-001094	INDUCTOR-RADIAL;10uH,10%,6x4mm	
....4	PCB	AA41-00276A	PCB-TTX;SP43J5MF,FR-4,2L,A,1.6T,180x24	S.N.A
....4	RT01	2007-000290	R-CHIP;100OHM,5%,1/10W,DA,TP,2012	
....4	RT02	2007-000290	R-CHIP;100OHM,5%,1/10W,DA,TP,2012	
....4	RT03	2007-000290	R-CHIP;100OHM,5%,1/10W,DA,TP,2012	
....4	RT04	2007-000300	R-CHIP;10KOHM,5%,1/10W,DA,TP,2012	
....4	RT05	2007-000300	R-CHIP;10KOHM,5%,1/10W,DA,TP,2012	
....4	RT06	2007-000300	R-CHIP;10KOHM,5%,1/10W,DA,TP,2012	
....4	RT07	2007-000872	R-CHIP;4.7KOHM,5%,1/10W,DA,TP,2012	
....4	RT08	2007-000872	R-CHIP;4.7KOHM,5%,1/10W,DA,TP,2012	
....4	RT09	2007-000872	R-CHIP;4.7KOHM,5%,1/10W,DA,TP,2012	
....4	RT10	2007-000300	R-CHIP;10KOHM,5%,1/10W,DA,TP,2012	
....4	RT11	2007-000300	R-CHIP;10KOHM,5%,1/10W,DA,TP,2012	
....4	RT12	2007-000941	R-CHIP;47KOHM,5%,1/10W,DA,TP,2012	
....4	RT13	2007-000518	R-CHIP;2.7KOHM,5%,1/10W,DA,TP,2012	
....4	RT14	2007-000653	R-CHIP;27KOHM,5%,1/10W,DA,TP,2012	
....4	RT15	2007-000477	R-CHIP;1MOHM,5%,1/10W,DA,TP,2012	
....4	RT16	2007-000290	R-CHIP;100OHM,5%,1/10W,DA,TP,2012	
....4	RT18	2007-000300	R-CHIP;10KOHM,5%,1/10W,DA,TP,2012	
....4	RT22	2007-000300	R-CHIP;10KOHM,5%,1/10W,DA,TP,2012	
....4	RT26	2007-000290	R-CHIP;100OHM,5%,1/10W,DA,TP,2012	
....4	RT27	2007-000290	R-CHIP;100OHM,5%,1/10W,DA,TP,2012	
....4	RT28	2007-000290	R-CHIP;100OHM,5%,1/10W,DA,TP,2012	
....4	RT29	2007-000290	R-CHIP;100OHM,5%,1/10W,DA,TP,2012	
....4	RT30	2007-000290	R-CHIP;100OHM,5%,1/10W,DA,TP,2012	
....4	RT31	2007-000572	R-CHIP;220OHM,5%,1/10W,DA,TP,2012	
....4	RT32	2007-000728	R-CHIP;300OHM,5%,1/10W,DA,TP,2012	
....4	RT33	2007-000572	R-CHIP;220OHM,5%,1/10W,DA,TP,2012	
....4	RT34	2007-000728	R-CHIP;300OHM,5%,1/10W,DA,TP,2012	
....4	RT35	2007-000572	R-CHIP;220OHM,5%,1/10W,DA,TP,2012	
....4	RT36	2007-000728	R-CHIP;300OHM,5%,1/10W,DA,TP,2012	
...3		0202-000187	SOLDER-WIRE FLUX;-,RS60S,D1.2,63Sn/37Pb	S.N.A
...3		0202-001004	SOLDER-CREAM;SQ-2030M SZH-1,S63A,D0.04,6	S.N.A
...3		AA63-40014A	SHIELD-CASE,T;-,SPTE,T0.5,SCT51A,-	S.N.A
..2		AA99-30200Y	ASSY-PCB ROBOT; AA94-03113P ,ER	S.N.A
...3	CS810	2201-000446	C-CERAMIC,DISC;3.3nF,20%,400V,Y5U,TP,15x	
...3	CS811	2201-000446	C-CERAMIC,DISC;3.3nF,20%,400V,Y5U,TP,15x	

Level	Loc. No.	Code No.	Description ; Specification	Remark
...3	FI101	2904-000253	FILTER-SAW AV;38.9MHz,DIP10K,ST,18dB,B/G	
...3	FI102	2904-001010	FILTER-SAW AV;32.9~33.4MHz,SIP5P,ST,14.4	
...3	H002	AA40-10006T	TUNER-F/S;TECC2849PG29A(S),PAL-B/G,TR,18	
⚠ ...3	IC501	AA96-00111L	ASSY-H/S;-,-,AA62-30013L,KA78R12,-	
....4		1203-000165	IC-POSI.ADJUST REG.;78R12,TO-220,3P,-,-	
....4		6003-000333	SCREW-TAPTITE;RH,+,2S,M3,L10,ZPC(YEL),SW	S.N.A
....4		AA62-30013L	HEATSINK-ES;-,-,-,-,44/22,-,WHT,-,-,-,-	S.N.A
⚠ ...3	IC807	AA96-50147A	ASSY-H/S;-,TR,AA62-30012B,KA7805A,-	S.N.A
....4		1203-000274	IC-POSI.FIXED REG.;7805,TO-220,3P,-,PLAS	
....4		6003-000333	SCREW-TAPTITE;RH,+,2S,M3,L10,ZPC(YEL),SW	S.N.A
....4		AA62-30012B	HEAT SINK-ES;-,A6063 EXTR,-,-,45(16) T02	S.N.A
⚠ ...3	IC901	AA09-00093A	IC MICOM;Z9035612PSC-R50P3,SP43J5HF,52P	
⚠ ...3	IC902	1103-001106	IC-EEPROM;C81DC,1028x8Bit,DIP,8P,300MIL,	
⚠ ...3	ICS801	AA13-00024A	IC-HYBRID;-,TNY253P,-,8PIN,-,-	
⚠ ...3	ICS802	0604-001032	PHOTO-COUPLER;TR,170-260%,300mW,DIP-4,ST	
...3		AA99-10195Z	ASSY-PCB MAIN,AUTO; AA99-30200Y ,V	S.N.A
....4	C103	2201-000119	C-CERAMIC,DISC;100nF,+80-20%,50V,Y5V,TP,	
....4	C104	2401-001840	C-AL;100uF,20%,16V,GP,TP,6.3x11,5	
....4	C105	2401-000302	C-AL;100uF,20%,25V,GP,TP,6.3x11,5	
....4	C107	2305-000665	C-FILM,MPEF;100nF,5%,63V,TP,7.5x4.0x5.0m	
....4	C109	2201-000119	C-CERAMIC,DISC;100nF,+80-20%,50V,Y5V,TP,	
....4	C110	2401-001840	C-AL;100uF,20%,16V,GP,TP,6.3x11,5	
....4	C119	2201-000119	C-CERAMIC,DISC;100nF,+80-20%,50V,Y5V,TP,	
....4	C121	2305-000665	C-FILM,MPEF;100nF,5%,63V,TP,7.5x4.0x5.0m	
....4	C125	2401-000603	C-AL;1uF,20%,50V,GP,TP,5x11,5	
....4	C126	2201-000119	C-CERAMIC,DISC;100nF,+80-20%,50V,Y5V,TP,	
....4	C130	2201-000119	C-CERAMIC,DISC;100nF,+80-20%,50V,Y5V,TP,	
....4	C131	2305-000665	C-FILM,MPEF;100nF,5%,63V,TP,7.5x4.0x5.0m	
....4	C132	2305-000665	C-FILM,MPEF;100nF,5%,63V,TP,7.5x4.0x5.0m	
....4	C133	2401-001363	C-AL;470uF,20%,16V,GP,TP,10x12.5,5	
....4	C134	2401-002273	C-AL;220uF,20%,25V,HR,TP,10x20mm,5m	
....4	C135	2401-000287	C-AL;100uF,20%,16V,WT,TP,6.3x11,5	
....4	C136	2401-000027	C-AL;4.7uF,20%,50V,GP,TP,5x11,5	
....4	C137	2401-002212	C-AL;10uF,20%,25V,WT,TP,5x11,5	
....4	C138	2305-000665	C-FILM,MPEF;100nF,5%,63V,TP,7.5x4.0x5.0m	
....4	C139	2201-000180	C-CERAMIC,DISC;10nF,10%,50V,Y5V,TP,7x3,5	
....4	C140	2201-000292	C-CERAMIC,DISC;1nF,10%,50V,Y5P,TP,5x3.5,	
....4	C141	2201-000292	C-CERAMIC,DISC;1nF,10%,50V,Y5P,TP,5x3.5,	
....4	C142	2305-000289	C-FILM,MPEF;220nF,5%,63V,TP,-,5mm	
....4	C143	2401-000667	C-AL;2.2uF,20%,50V,WT,TP,5x11,5	
....4	C144	2201-000180	C-CERAMIC,DISC;10nF,10%,50V,Y5V,TP,7x3,5	
....4	C145	2305-000665	C-FILM,MPEF;100nF,5%,63V,TP,7.5x4.0x5.0m	
....4	C146	2305-000665	C-FILM,MPEF;100nF,5%,63V,TP,7.5x4.0x5.0m	
....4	C147	2401-000660	C-AL;2.2uF,20%,50V,GP,TP,5x11,5	
....4	C148	2305-000665	C-FILM,MPEF;100nF,5%,63V,TP,7.5x4.0x5.0m	
....4	C149	2401-000947	C-AL;22uF,20%,35V,GP,TP,5x11,5	
....4	C180	2401-002300	C-AL;47uF,20%,50V,GP,TP,6.3x11,5	
....4	C185	2401-001363	C-AL;470uF,20%,16V,GP,TP,10x12.5,5	
....4	C191	2401-002619	C-AL;47uF,20%,25V,GP,TP,5x11,5	
....4	C501	2305-000665	C-FILM,MPEF;100nF,5%,63V,TP,7.5x4.0x5.0m	
....4	C502	2401-001397	C-AL;470uF,20%,25V,GP,TP,10x16,5	
....4	C503	2305-000665	C-FILM,MPEF;100nF,5%,63V,TP,7.5x4.0x5.0m	
....4	C504	2401-000832	C-AL;220uF,20%,25V,GP,TP,8x11.5,5	
....4	C505	2305-000665	C-FILM,MPEF;100nF,5%,63V,TP,7.5x4.0x5.0m	
....4	C506	2401-002594	C-AL;220uF,20%,16V,GP,TP,8x11.5,5	
....4	C507	2305-000665	C-FILM,MPEF;100nF,5%,63V,TP,7.5x4.0x5.0m	
....4	C508	2401-002286	C-AL;470uF,20%,16V,WT,TP,10x12.5,5	
....4	C509	2305-000665	C-FILM,MPEF;100nF,5%,63V,TP,7.5x4.0x5.0m	
....4	C510	2401-000133	C-AL;1000uF,20%,16V,GP,TP,10x20,5	
....4	C511	2305-000665	C-FILM,MPEF;100nF,5%,63V,TP,7.5x4.0x5.0m	
....4	C512	2401-000689	C-AL;2200uF,20%,16V,GP,TP,13x25,5	
....4	C519	2305-000665	C-FILM,MPEF;100nF,5%,63V,TP,7.5x4.0x5.0m	
....4	C520	2401-001397	C-AL;470uF,20%,25V,GP,TP,10x16,5	
....4	C521	2305-000665	C-FILM,MPEF;100nF,5%,63V,TP,7.5x4.0x5.0m	
....4	C522	2401-002286	C-AL;470uF,20%,16V,WT,TP,10x12.5,5	
....4	C523	2201-000292	C-CERAMIC,DISC;1nF,10%,50V,Y5P,TP,5x3.5,	
....4	C537	2305-000665	C-FILM,MPEF;100nF,5%,63V,TP,7.5x4.0x5.0m	
....4	C538	2401-001840	C-AL;100uF,20%,16V,GP,TP,6.3x11,5	
....4	C539	2401-001840	C-AL;100uF,20%,16V,GP,TP,6.3x11,5	
....4	C540	2305-000665	C-FILM,MPEF;100nF,5%,63V,TP,7.5x4.0x5.0m	
....4	C543	2201-000144	C-CERAMIC,DISC;0.1nF,5%,50V,NP0,TP,8.5x3	
....4	C544	2401-002144	C-AL;47uF,20%,16V,GP,TP,5x11,5	
....4	C601	2401-002299	C-AL;4.7uF,20%,50V,GP,TP,5x7,5	
....4	C602	2401-002299	C-AL;4.7uF,20%,50V,GP,TP,5x7,5	
....4	C666	2305-000665	C-FILM,MPEF;100nF,5%,63V,TP,7.5x4.0x5.0m	
....4	C667	2401-000603	C-AL;1uF,20%,50V,GP,TP,5x11,5	

Level	Loc. No.	Code No.	Description ; Specification	Remark
....4	C668	2401-000603	C-AL;1uF,20%,50V,GP,TP,5x11,5	
....4	C669	2401-000962	C-AL;22uF,20%,50V,GP,TP,5x11,5	
....4	C670	2401-000603	C-AL;1uF,20%,50V,GP,TP,5x11,5	
....4	C671	2401-001537	C-AL;47uF,20%,25V,GP,TP,6.3x7mm,5mm	
....4	C676	2401-001192	C-AL;33uF,20%,50V,GP,TP,6.3x11,5	
....4	C686	2201-000411	C-CERAMIC,DISC;0.27nF,10%,50V,Y5P,TP,4x3	
....4	C687	2201-000411	C-CERAMIC,DISC;0.27nF,10%,50V,Y5P,TP,4x3	
....4	C688	2401-000192	C-AL;1000uF,20%,50V,GP,TP,16x25,7.5	
....4	C689	2305-000665	C-FILM,MPEF;100nF,5%,63V,TP,7.5x4.0x5.0m	
....4	C690	2305-000665	C-FILM,MPEF;100nF,5%,63V,TP,7.5x4.0x5.0m	
....4	C691	2401-000192	C-AL;1000uF,20%,50V,GP,TP,16x25,7.5	
....4	C701	2401-000027	C-AL;4.7uF,20%,50V,GP,TP,5x11,5	
....4	C801	2401-002300	C-AL;47uF,20%,50V,GP,TP,6.3x11,5	
....4	C901	2202-000796	C-CERAMIC,MLC-AXIAL;1NF,10%,50V,Y5P,TP,3	
....4	C905	2401-001496	C-AL;47uF,20%,16V,GP,TP,5x7,5	
....4	C906	2305-000149	C-FILM,MPEF;100nF,5%,100V,TP,12x12.5x6.5	
....4	C908	2201-000292	C-CERAMIC,DISC;1nF,10%,50V,Y5P,TP,5x3.5,	
....4	C909	2201-000292	C-CERAMIC,DISC;1nF,10%,50V,Y5P,TP,5x3.5,	
....4	C912	2201-000119	C-CERAMIC,DISC;100nF,+80-20%,50V,Y5V,TP,	
....4	C913	2201-000193	C-CERAMIC,DISC;0.01nF,0.25pF,50V,NP0,TP,	
....4	C914	2201-000573	C-CERAMIC,DISC;0.047nF,5%,50V,NP0,TP,5x3	
....4	C915	2201-000119	C-CERAMIC,DISC;100nF,+80-20%,50V,Y5V,TP,	
....4	C916	2401-002042	C-AL;220uF,20%,10V,GP,TP,6.3x11,5	
....4	C917	2401-002144	C-AL;47uF,20%,16V,GP,TP,5x11,5	
....4	C918	2201-000119	C-CERAMIC,DISC;100nF,+80-20%,50V,Y5V,TP,	
....4	C919	2401-000480	C-AL;10uF,20%,50V,GP,TP,5x11,5	
....4	C920	2201-000119	C-CERAMIC,DISC;100nF,+80-20%,50V,Y5V,TP,	
....4	C925	2201-000119	C-CERAMIC,DISC;100nF,+80-20%,50V,Y5V,TP,	
....4	C926	2401-000480	C-AL;10uF,20%,50V,GP,TP,5x11,5	
....4	C927	2202-000231	C-CERAMIC,MLC-AXIAL;330pF,10%,50V,Y5P,TP	
....4	C928	2202-000796	C-CERAMIC,MLC-AXIAL;1NF,10%,50V,Y5P,TP,3	
....4	CN003	3711-002642	CONNECTOR-HEADER;BOX,3P,1R,2.5MM,STRAIGH	
....4	CN402	3711-002642	CONNECTOR-HEADER;BOX,3P,1R,2.5MM,STRAIGH	
....4	CN403	3711-002642	CONNECTOR-HEADER;BOX,3P,1R,2.5MM,STRAIGH	
....4	CN404	3711-002642	CONNECTOR-HEADER;BOX,3P,1R,2.5MM,STRAIGH	
....4	CN601	3711-002643	CONNECTOR-HEADER;BOX,4P,1R,2.5MM,STRAIGH	
....4	CS801	2201-000332	C-CERAMIC,DISC;2.2nF,20%,250V,Y5U,TP,9x4	
....4	CS802	2201-000332	C-CERAMIC,DISC;2.2nF,20%,250V,Y5U,TP,9x4	
....4	CS804	2201-000119	C-CERAMIC,DISC;100nF,+80-20%,50V,Y5V,TP,	
....4	CS805	2401-002286	C-AL;470uF,20%,16V,WT,TP,10x12.5,5	
....4	CS807	2201-000119	C-CERAMIC,DISC;100nF,+80-20%,50V,Y5V,TP,	
....4	CS808	2401-002286	C-AL;470uF,20%,16V,WT,TP,10x12.5,5	
....4	CS809	2201-000556	C-CERAMIC,DISC;0.47nF,10%,500V,Y5P,TP,5.	
....4	CS812	2201-002076	C-CERAMIC,DISC;0.068nF,5%,1kV,SL,TP,8x4m	
....4	CZ144	2401-000480	C-AL;10uF,20%,50V,GP,TP,5x11,5	
....4	CZ146	2401-000832	C-AL;220uF,20%,25V,GP,TP,8x11.5,5	
....4	CZ147	2201-000193	C-CERAMIC,DISC;0.01nF,0.25pF,50V,NP0,TP,	
....4	CZ148	2201-000193	C-CERAMIC,DISC;0.01nF,0.25pF,50V,NP0,TP,	
....4	CZ149	2201-000516	C-CERAMIC,DISC;4.7nF,+100-0%,500V,Y5U,TP	
....4	CZ150	2201-000516	C-CERAMIC,DISC;4.7nF,+100-0%,500V,Y5U,TP	
....4	CZ151	2401-001513	C-AL;47uF,20%,16V,WT,TP,5x11,5	
....4	CZ152	2401-001157	C-AL;33uF,20%,160V,GP,TP,12.5x20,5	
....4	CZ153	2401-001513	C-AL;47uF,20%,16V,WT,TP,5x11,5	
....4	CZ155	2201-000604	C-CERAMIC,DISC;0.056nF,+100-0%,500V,SL,T	
....4	CZ167	2401-001220	C-AL;4.7uF,20%,160V,GP,TP,8x11.5,5	
....4	CZ167A	2401-001220	C-AL;4.7uF,20%,160V,GP,TP,8x11.5,5	
....4	D101	0401-001088	DIODE-SWITCHING;BAW76,50V,300mA,DO-35,TP	
....4	D102	0401-001088	DIODE-SWITCHING;BAW76,50V,300mA,DO-35,TP	
....4	D103	0401-001088	DIODE-SWITCHING;BAW76,50V,300mA,DO-35,TP	
....4	D501	0401-000005	DIODE-SWITCHING;1N4148,100V,200MA,DO-35,	
....4	D664	0402-000546	DIODE-RECTIFIER;TVR10G,400V,1.0A,DO-41,T	
....4	D665	0401-000005	DIODE-SWITCHING;1N4148,100V,200MA,DO-35,	
....4	D666	0401-000005	DIODE-SWITCHING;1N4148,100V,200MA,DO-35,	
....4	D667	0401-000005	DIODE-SWITCHING;1N4148,100V,200MA,DO-35,	
....4	D668	0401-000005	DIODE-SWITCHING;1N4148,100V,200MA,DO-35,	
....4	D669	0401-000005	DIODE-SWITCHING;1N4148,100V,200MA,DO-35,	
....4	D701	0401-000005	DIODE-SWITCHING;1N4148,100V,200MA,DO-35,	
....4	D702	0401-000005	DIODE-SWITCHING;1N4148,100V,200MA,DO-35,	
....4	D703	0401-000005	DIODE-SWITCHING;1N4148,100V,200MA,DO-35,	
....4	D901	0401-000005	DIODE-SWITCHING;1N4148,100V,200MA,DO-35,	
....4	D902	0401-000005	DIODE-SWITCHING;1N4148,100V,200MA,DO-35,	
....4	D903	0401-000005	DIODE-SWITCHING;1N4148,100V,200MA,DO-35,	
....4	D904	0401-000005	DIODE-SWITCHING;1N4148,100V,200MA,DO-35,	
....4	D905	0401-000005	DIODE-SWITCHING;1N4148,100V,200MA,DO-35,	
....4	D906	0401-000005	DIODE-SWITCHING;1N4148,100V,200MA,DO-35,	
....4	D907	0401-000005	DIODE-SWITCHING;1N4148,100V,200MA,DO-35,	
⚠ 4	DS802	1405-000152	VARISTOR;560V,2500A,14x8.5mm,TP	
⚠ 4	DS803	0403-001322	DIODE-ZENER;MTZJ8.2B,7.78-8.19V,500mW,DO	
⚠ 4	DS804	0403-001318	DIODE-ZENER;MTZJ4.3B,4.17-4.43V,500mW,DO	
⚠ 4	DS805	0402-000534	DIODE-RECTIFIER;RG10V,400V,1.2A,DO-201,T	
⚠ 4	DS806	1405-001030	VARISTOR;120V,2500A,14x8.5mm,TP	
⚠ 4	DS807	0402-000546	DIODE-RECTIFIER;TVR10G,400V,1.0A,DO-41,T	
⚠ 4	DS808	1405-000152	VARISTOR;560V,2500A,14x8.5mm,TP	
⚠ 4	DS809	0404-001056	DIODE-SCHOTTKY;RK16,60V,1.5A,DO-204AC,TP	
⚠ 4	DS810	1405-000152	VARISTOR;560V,2500A,14x8.5mm,TP	
....4	DZ116	0401-000005	DIODE-SWITCHING;1N4148,100V,200MA,DO-35,	
....4	DZ117	0401-000005	DIODE-SWITCHING;1N4148,100V,200MA,DO-35,	
....4	DZ118	0402-000546	DIODE-RECTIFIER;TVR10G,400V,1.0A,DO-41,T	
....4	DZ119	0401-000005	DIODE-SWITCHING;1N4148,100V,200MA,DO-35,	
....4	DZ120	0402-000546	DIODE-RECTIFIER;TVR10G,400V,1.0A,DO-41,T	
....4	DZ121	0402-000546	DIODE-RECTIFIER;TVR10G,400V,1.0A,DO-41,T	
....4	DZ501	0403-000508	DIODE-ZENER;MTZJ5.6B,5.6V,5.45-5.73V,500	
....4	DZ502	0403-000508	DIODE-ZENER;MTZJ5.6B,5.6V,5.45-5.73V,500	
....4	DZ503	0403-000720	DIODE-ZENER;MTZJ9.1B,9.1V,8.57-9.01V,500	
....4	DZ504	0403-000720	DIODE-ZENER;MTZJ9.1B,9.1V,8.57-9.01V,500	
....4	DZ505	0403-000720	DIODE-ZENER;MTZJ9.1B,9.1V,8.57-9.01V,500	
....4	DZ506	0403-000508	DIODE-ZENER;MTZJ5.6B,5.6V,5.45-5.73V,500	
....4	DZ507	0403-000510	DIODE-ZENER;MTZJ6.2B,6.2V,5.96-6.27V,500	
....4	DZ508	0403-000510	DIODE-ZENER;MTZJ6.2B,6.2V,5.96-6.27V,500	
....4	DZ665	0403-001039	DIODE-ZENER;MA2560,56V,52-60V,1W,DO-41,T	
....4	DZ666	0403-001325	DIODE-ZENER;MTZJ15C,14.35-15.09V,500mW,D	
....4	DZ667	0403-001319	DIODE-ZENER;MTZJ4.7C,4.68-4.93V,500mW,DO	
....4	DZ701	0403-001140	DIODE-ZENER;RD10ESAB-T4,10V,9.19-10.30V,	
....4	DZ801	0403-000700	DIODE-ZENER;TZP33A,33V,31-35V,1W,DO-41,T	
....4	DZ901	0403-000508	DIODE-ZENER;MTZJ5.6B,5.6V,5.45-5.73V,500	
....4	DZ902	0403-000508	DIODE-ZENER;MTZJ5.6B,5.6V,5.45-5.73V,500	
....4	DZ903	0403-000508	DIODE-ZENER;MTZJ5.6B,5.6V,5.45-5.73V,500	
....4	DZ904	0403-000508	DIODE-ZENER;MTZJ5.6B,5.6V,5.45-5.73V,500	
....4	DZ905	0403-000510	DIODE-ZENER;MTZJ6.2B,6.2V,5.96-6.27V,500	
....4	DZ906	0403-000510	DIODE-ZENER;MTZJ6.2B,6.2V,5.96-6.27V,500	
....4	DZ907	0403-000510	DIODE-ZENER;MTZJ6.2B,6.2V,5.96-6.27V,500	
....4	DZ911	0403-000510	DIODE-ZENER;MTZJ6.2B,6.2V,5.96-6.27V,500	
....4	DZ912	0403-000508	DIODE-ZENER;MTZJ5.6B,5.6V,5.45-5.73V,500	
....4	DZ914	0403-000508	DIODE-ZENER;MTZJ5.6B,5.6V,5.45-5.73V,500	
....4	DZ915	0403-000508	DIODE-ZENER;MTZJ5.6B,5.6V,5.45-5.73V,500	
....4	F901	2901-000297	FILTER-EMI ON BOARD;-,3A,-,-,3.5x5,TP,-	
....4	FI103	2903-000181	FILTER-CERAMIC;BR,5.5MHz,-,-,-,TP,TPS5.5	
....4	FI104	2903-000129	FILTER-CERAMIC;BR,4.5MHz,-,-,-,TP,-	
⚠ 4	IC506	1203-000293	IC-POSI.FIXED REG.;7808,TO-220,3P,-,PLAS	
⚠ 4	IC904	1203-000515	IC-VOL. DETECTOR;7042,TO-92,3P,177MIL,PL	
....4	L101	2701-000115	INDUCTOR-AXIAL;10uH,10%,3x7mm	
....4	L103	2701-000115	INDUCTOR-AXIAL;10uH,10%,3x7mm	
....4	L106	2701-000115	INDUCTOR-AXIAL;10uH,10%,3x7mm	
....4	L107	2701-000115	INDUCTOR-AXIAL;10uH,10%,3x7mm	
....4	L108	2701-000115	INDUCTOR-AXIAL;10uH,10%,3x7mm	
....4	L109	2701-000101	INDUCTOR-AXIAL;1.2uH,10%,2.5x3.4mm	
....4	L110	2701-000115	INDUCTOR-AXIAL;10uH,10%,3x7mm	
....4	L111	2701-000120	INDUCTOR-AXIAL;12uH,10%,2.5x3.4mm	
....4	L112	2701-000299	INDUCTOR-AXIAL;13UH,10%,2.5X3.4MM	
....4	L113	AA26-10006G	TRANS-IF;-,7mG,VIF,-,7mm,8pF,77.8MHz,ST	
....4	L114	2701-000114	INDUCTOR-AXIAL;10uH,10%,2.5x3.4mm	
....4	L115	2701-000114	INDUCTOR-AXIAL;10uH,10%,2.5x3.4mm	
....4	L116	2701-000114	INDUCTOR-AXIAL;10uH,10%,2.5x3.4mm	
....4	L117	2701-000114	INDUCTOR-AXIAL;10uH,10%,2.5x3.4mm	
....4	L118	2701-000115	INDUCTOR-AXIAL;10uH,10%,3x7mm	
....4	L501	2701-000114	INDUCTOR-AXIAL;10uH,10%,2.5x3.4mm	
....4	L502	2701-000114	INDUCTOR-AXIAL;10uH,10%,2.5x3.4mm	
....4	L503	2701-000114	INDUCTOR-AXIAL;10uH,10%,2.5x3.4mm	
....4	L504	2701-000114	INDUCTOR-AXIAL;10uH,10%,2.5x3.4mm	
....4	L505	2901-000297	FILTER-EMI ON BOARD;-,3A,-,-,3.5x5,TP,-	
....4	L506	3301-000287	CORE-FERRITE BEAD;AA,3.5x1.0x6.0mm,1500,	
....4	L507	3301-000287	CORE-FERRITE BEAD;AA,3.5x1.0x6.0mm,1500,	
....4	L514	3301-000287	CORE-FERRITE BEAD;AA,3.5x1.0x6.0mm,1500,	
....4	L515	3301-000287	CORE-FERRITE BEAD;AA,3.5x1.0x6.0mm,1500,	
....4	L601	2701-000114	INDUCTOR-AXIAL;10uH,10%,2.5x3.4mm	
....4	L602	2701-000114	INDUCTOR-AXIAL;10uH,10%,2.5x3.4mm	
....4	L604	3301-000287	CORE-FERRITE BEAD;AA,3.5x1.0x6.0mm,1500,	
....4	L901	2901-000297	FILTER-EMI ON BOARD;-,3A,-,-,3.5x5,TP,-	
....4	L902	2701-000115	INDUCTOR-AXIAL;10uH,10%,3x7mm	
....4	L903	2701-001040	INDUCTOR-AXIAL;10uH,10%,4.5x14mm	
....4	L907	3301-000287	CORE-FERRITE BEAD;AA,3.5x1.0x6.0mm,1500,	
....4	L909	2701-000114	INDUCTOR-AXIAL;10uH,10%,2.5x3.4mm	
....4	L910	2701-000114	INDUCTOR-AXIAL;10uH,10%,2.5x3.4mm	
....4	L911	2701-000114	INDUCTOR-AXIAL;10uH,10%,2.5x3.4mm	

Level	Loc. No.	Code No.	Description ; Specification	Remark
....4	L912	2701-000114	INDUCTOR-AXIAL;10uH,10%,2.5x3.4mm	
....4	LD901	2701-000115	INDUCTOR-AXIAL;10uH,10%,3x7mm	
....4	LS801	2901-000297	FILTER-EMI ON BOARD;-,3A,-,-,-,3.5x5,TP,-	
....4	LS802	2901-000297	FILTER-EMI ON BOARD;-,3A,-,-,-,3.5x5,TP,-	
....4	LS803	3301-000287	CORE-FERRITE BEAD;AA,3.5x1.0x6.0mm,1500,	
....4	LZ112	2701-000002	INDUCTOR-AXIAL;100uH,10%,4.2x9.8mm	
....4	PCB	AA41-00075A	PCB-MAIN;J51A,1L,FR-1,330X245X1.6T,1A,-	S.N.A
....4	Q101	0504-000137	TR-DIGITAL;KSR1202,NPN,300mW,10K/10K,TO-	
....4	Q102	0504-000123	TR-DIGITAL;KSR1010,NPN,300mW,10K,TO-92,T	
....4	Q103	0501-000245	TR-SMALL SIGNAL;BC548C,NPN,500mW,TO-92,T	
....4	Q104	0504-000123	TR-DIGITAL;KSR1010,NPN,300mW,10K,TO-92,T	
....4	Q105	0501-000389	TR-SMALL SIGNAL;KSC815,NPN,400mW,TO-92,T	
....4	Q106	0504-000150	TR-DIGITAL;KSR2010,PNP,300mW,10K,TO-92,T	
....4	Q107	0504-000123	TR-DIGITAL;KSR1010,NPN,300mW,10K,TO-92,T	
....4	Q665	0501-000389	TR-SMALL SIGNAL;KSC815,NPN,400mW,TO-92,T	
....4	Q666	0501-000389	TR-SMALL SIGNAL;KSC815,NPN,400mW,TO-92,T	
....4	Q667	0501-000389	TR-SMALL SIGNAL;KSC815,NPN,400mW,TO-92,T	
....4	Q701	0501-000389	TR-SMALL SIGNAL;KSC815,NPN,400mW,TO-92,T	
....4	Q702	0501-000389	TR-SMALL SIGNAL;KSC815,NPN,400mW,TO-92,T	
....4	Q901	0501-000389	TR-SMALL SIGNAL;KSC815,NPN,400mW,TO-92,T	
....4	Q902	0501-000389	TR-SMALL SIGNAL;KSC815,NPN,400mW,TO-92,T	
....4	Q903	0501-000389	TR-SMALL SIGNAL;KSC815,NPN,400mW,TO-92,T	
....4	Q909	0501-000283	TR-SMALL SIGNAL;KSA539,PNP,400mW,TO-92,T	
....4	Q910	0501-000389	TR-SMALL SIGNAL;KSC815,NPN,400mW,TO-92,T	
....4	QS801	0501-000369	TR-SMALL SIGNAL;KSC2331-Y,NPN,1W,TO-92L,	
....4	QZ103	0501-000389	TR-SMALL SIGNAL;KSC815,NPN,400mW,TO-92,T	
....4	QZ104	0501-000389	TR-SMALL SIGNAL;KSC815,NPN,400mW,TO-92,T	
....4	QZ105	0501-000389	TR-SMALL SIGNAL;KSC815,NPN,400mW,TO-92,T	
....4	QZ106	0501-000283	TR-SMALL SIGNAL;KSA539,PNP,400mW,TO-92,T	
....4	R123	2001-000429	R-CARBON;1KOHM,5%,1/8W,AA,TP,1.8X3.2MM	
....4	R131	2001-000739	R-CARBON;4.7MOHM,5%,1/8W,AA,TP,1.8X3.2M	
....4	R132	2001-000739	R-CARBON;4.7MOHM,5%,1/8W,AA,TP,1.8X3.2M	
....4	R142	2001-000281	R-CARBON;100OHM,5%,1/8W,AA,TP,1.8X3.2MM	
....4	R145	2001-000890	R-CARBON;6.8KOHM,5%,1/8W,AA,TP,1.8X3.2M	
....4	R146	2001-000362	R-CARBON;150OHM,5%,1/8W,AA,TP,1.8X3.2MM	
....4	R148	2001-000290	R-CARBON;10KOHM,5%,1/8W,AA,TP,1.8X3.2MM	
....4	R149	2001-000331	R-CARBON;12KOHM,5%,1/8W,AA,TP,1.8X3.2MM	
....4	R150	2001-000290	R-CARBON;10KOHM,5%,1/8W,AA,TP,1.8X3.2MM	
....4	R151	2001-000313	R-CARBON;11KOHM,5%,1/8W,AA,TP,1.8X3.2MM	
....4	R152	2001-000449	R-CARBON;2.2KOHM,5%,1/8W,AA,TP,1.8X3.2M	
....4	R153	2001-000449	R-CARBON;2.2KOHM,5%,1/8W,AA,TP,1.8X3.2M	
....4	R154	2001-000449	R-CARBON;2.2KOHM,5%,1/8W,AA,TP,1.8X3.2M	
....4	R155	2001-000522	R-CARBON;22KOHM,5%,1/8W,AA,TP,1.8X3.2MM	
....4	R156	2001-000241	R-CARBON;1.5KOHM,5%,1/8W,AA,TP,1.8X3.2M	
....4	R157	2001-000241	R-CARBON;1.5KOHM,5%,1/8W,AA,TP,1.8X3.2M	
....4	R158	2001-000857	R-CARBON;560OHM,5%,1/8W,AA,TP,1.8X3.2MM	
....4	R159	2001-000864	R-CARBON;56KOHM,5%,1/8W,AA,TP,1.8X3.2MM	
....4	R160	2001-000786	R-CARBON;47KOHM,5%,1/8W,AA,TP,1.8X3.2MM	
....4	R161	2001-000005	R-CARBON;390ohm,5%,1/8W,AA,TP,1.8x3.2mm	
....4	R162	2001-000969	R-CARBON;75OHM,5%,1/8W,AA,TP,1.8X3.2MM	
....4	R163	2001-000515	R-CARBON;220OHM,5%,1/8W,AA,TP,1.8X3.2MM	
....4	R164	2001-000490	R-CARBON;200OHM,5%,1/8W,AA,TP,1.8X3.2MM	
....4	R165	2001-000515	R-CARBON;220OHM,5%,1/8W,AA,TP,1.8X3.2MM	
....4	R166	2001-000429	R-CARBON;1KOHM,5%,1/8W,AA,TP,1.8X3.2MM	
....4	R167	2001-000522	R-CARBON;22KOHM,5%,1/8W,AA,TP,1.8X3.2MM	
....4	R168	2001-000522	R-CARBON;22KOHM,5%,1/8W,AA,TP,1.8X3.2MM	
....4	R169	2001-000734	R-CARBON;4.7KOHM,5%,1/8W,AA,TP,1.8X3.2M	
....4	R501	2001-000066	R-CARBON(S);10KOHM,5%,1/2W,AA,TP,2.4X6.4	
....4	R502	2001-000281	R-CARBON;100OHM,5%,1/8W,AA,TP,1.8X3.2MM	
....4	R503	2001-000281	R-CARBON;100OHM,5%,1/8W,AA,TP,1.8X3.2MM	
....4	R504	2001-000405	R-CARBON;180OHM,5%,1/8W,AA,TP,1.8X3.2MM	
....4	R509	2008-000266	R-FUSIBLE(S);1ohm,5%,2W,AF,TP,3.9x10mm	
....4	R510	2008-000266	R-FUSIBLE(S);1ohm,5%,2W,AF,TP,3.9x10mm	
....4	R511	2008-001116	R-FUSIBLE(S);0.68ohm,10%,2W,AG,TP,3.9x12	
....4	R512	2001-000003	R-CARBON;330ohm,5%,1/8W,AA,TP,1.8x3.2mm	
....4	R524	2001-000739	R-CARBON;4.7MOHM,5%,1/8W,AA,TP,1.8X3.2M	
....4	R525	2001-000739	R-CARBON;4.7MOHM,5%,1/8W,AA,TP,1.8X3.2M	
....4	R526	2001-000739	R-CARBON;4.7MOHM,5%,1/8W,AA,TP,1.8X3.2M	
....4	R531	2001-000739	R-CARBON;4.7MOHM,5%,1/8W,AA,TP,1.8X3.2M	
....4	R532	2001-000037	R-CARBON(S);330OHM,5%,1/2W,AA,TP,2.4X6.4	
....4	R533	2001-000739	R-CARBON;4.7MOHM,5%,1/8W,AA,TP,1.8X3.2M	
....4	R601	2001-000109	R-CARBON(S);470OHM,5%,1/2W,AA,TP,2.4X6.4	
....4	R602	2001-000605	R-CARBON;3.6KOHM,5%,1/8W,AA,TP,1.8X3.2M	
....4	R603	2001-000734	R-CARBON;4.7KOHM,5%,1/8W,AA,TP,1.8X3.2M	
....4	R661	2001-001093	R-CARBON(S);2.2KOHM,5%,1/2W,AA,TP,2.4X6.	
....4	R662	2001-001093	R-CARBON(S);2.2KOHM,5%,1/2W,AA,TP,2.4X6.	
....4	R665	2001-001188	R-CARBON(S);8.2KOHM,5%,1/2W,AA,TP,2.4X6.	
....4	R666	2001-001188	R-CARBON(S);8.2KOHM,5%,1/2W,AA,TP,2.4X6.	
....4	R668	2001-000028	R-CARBON(S);100OHM,5%,1/2W,AA,TP,2.4X6.4	
....4	R669	2001-001144	R-CARBON(S);4.7KOHM,5%,1/2W,AA,TP,2.4X6.	
....4	R670	2001-000085	R-CARBON(S);100KOHM,5%,1/2W,AA,TP,2.4X6.	
....4	R671	2001-000066	R-CARBON(S);10KOHM,5%,1/2W,AA,TP,2.4X6.4	
....4	R672	2001-000066	R-CARBON(S);10KOHM,5%,1/2W,AA,TP,2.4X6.4	
....4	R673	2001-000411	R-CARBON;18KOHM,5%,1/8W,AA,TP,1.8X3.2MM	
....4	R674	2001-000780	R-CARBON;470OHM,5%,1/8W,AA,TP,1.8X3.2MM	
....4	R675	2001-000066	R-CARBON(S);10KOHM,5%,1/2W,AA,TP,2.4X6.4	
....4	R676	2001-000812	R-CARBON;5.6KOHM,5%,1/8W,AA,TP,1.8X3.2M	
....4	R677	2001-000290	R-CARBON;10KOHM,5%,1/8W,AA,TP,1.8X3.2MM	
....4	R678	2001-000008	R-CARBON;15KOHM,5%,1/8W,AA,TP,1.8X3.2MM	
....4	R679	2001-001071	R-CARBON(S);12KOHM,5%,1/2W,AA,TP,2.4X6.4	
....4	R680	2001-001000	R-CARBON;82KOHM,5%,1/8W,AA,TP,1.8X3.2MM	
....4	R681	2001-001093	R-CARBON(S);2.2KOHM,5%,1/2W,AA,TP,2.4X6.	
....4	R682	2004-001897	R-METAL(S);43.2Kohm,1%,1/2W,AA,TP,2.5x6.	
....4	R683	2004-001897	R-METAL(S);43.2Kohm,1%,1/2W,AA,TP,2.5x6.	
....4	R684	2001-001093	R-CARBON(S);2.2KOHM,5%,1/2W,AA,TP,2.4X6.	
....4	R685	2004-001390	R-METAL(S);1Kohm,2%,1/2W,AA,TP,2.4x6.4mm	
....4	R686	2004-001390	R-METAL(S);1Kohm,2%,1/2W,AA,TP,2.4x6.4mm	
....4	R687	2001-001146	R-CARBON(S);4.7OHM,5%,1/2W,AA,TP,2.4X6.4	
....4	R689	2001-001146	R-CARBON(S);4.7OHM,5%,1/2W,AA,TP,2.4X6.4	
....4	R690	2001-000734	R-CARBON;4.7KOHM,5%,1/8W,AA,TP,1.8X3.2M	
....4	R701	2001-000786	R-CARBON;47KOHM,5%,1/8W,AA,TP,1.8X3.2MM	
....4	R702	2001-000290	R-CARBON;10KOHM,5%,1/8W,AA,TP,1.8X3.2MM	
....4	R703	2001-000290	R-CARBON;10KOHM,5%,1/8W,AA,TP,1.8X3.2MM	
....4	R704	2001-000290	R-CARBON;10KOHM,5%,1/8W,AA,TP,1.8X3.2MM	
....4	R801	2003-001098	R-METAL OXIDE(S);22Kohm,5%,3W,AA,TP,6x16	
....4	R901	2001-000734	R-CARBON;4.7KOHM,5%,1/8W,AA,TP,1.8X3.2M	
....4	R903	2001-000429	R-CARBON;1KOHM,5%,1/8W,AA,TP,1.8X3.2MM	
....4	R904	2001-000290	R-CARBON;10KOHM,5%,1/8W,AA,TP,1.8X3.2MM	
....4	R905	2001-000734	R-CARBON;4.7KOHM,5%,1/8W,AA,TP,1.8X3.2M	
....4	R906	2001-000429	R-CARBON;1KOHM,5%,1/8W,AA,TP,1.8X3.2MM	
....4	R907	2001-000429	R-CARBON;1KOHM,5%,1/8W,AA,TP,1.8X3.2MM	
....4	R908	2001-000281	R-CARBON;100OHM,5%,1/8W,AA,TP,1.8X3.2MM	
....4	R909	2001-000281	R-CARBON;100OHM,5%,1/8W,AA,TP,1.8X3.2MM	
....4	R910	2001-000281	R-CARBON;100OHM,5%,1/8W,AA,TP,1.8X3.2MM	
....4	R912	2001-000003	R-CARBON;330ohm,5%,1/8W,AA,TP,1.8x3.2mm	
....4	R914	2001-000281	R-CARBON;100OHM,5%,1/8W,AA,TP,1.8X3.2MM	
....4	R915	2001-000281	R-CARBON;100OHM,5%,1/8W,AA,TP,1.8X3.2MM	
....4	R916	2001-000472	R-CARBON;2.7KOHM,5%,1/8W,AA,TP,1.8X3.2M	
....4	R917	2001-000472	R-CARBON;2.7KOHM,5%,1/8W,AA,TP,1.8X3.2M	
....4	R918	2001-000832	R-CARBON;510OHM,5%,1/8W,AA,TP,1.8X3.2MM	
....4	R919	2001-000591	R-CARBON;3.3KOHM,5%,1/8W,AA,TP,1.8X3.2M	
....4	R921	2001-000812	R-CARBON;5.6KOHM,5%,1/8W,AA,TP,1.8X3.2M	
....4	R922	2001-000812	R-CARBON;5.6KOHM,5%,1/8W,AA,TP,1.8X3.2M	
....4	R923	2001-000786	R-CARBON;47KOHM,5%,1/8W,AA,TP,1.8X3.2MM	
....4	R924	2001-000786	R-CARBON;47KOHM,5%,1/8W,AA,TP,1.8X3.2MM	
....4	R925	2001-000241	R-CARBON;1.5KOHM,5%,1/8W,AA,TP,1.8X3.2M	
....4	R926	2001-000241	R-CARBON;1.5KOHM,5%,1/8W,AA,TP,1.8X3.2M	
....4	R930	2001-000734	R-CARBON;4.7KOHM,5%,1/8W,AA,TP,1.8X3.2M	
....4	R931	2001-000734	R-CARBON;4.7KOHM,5%,1/8W,AA,TP,1.8X3.2M	
....4	R932	2001-000734	R-CARBON;4.7KOHM,5%,1/8W,AA,TP,1.8X3.2M	
....4	R945	2001-000429	R-CARBON;1KOHM,5%,1/8W,AA,TP,1.8X3.2MM	
....4	R946	2001-000290	R-CARBON;10KOHM,5%,1/8W,AA,TP,1.8X3.2MM	
....4	R947	2001-000290	R-CARBON;10KOHM,5%,1/8W,AA,TP,1.8X3.2MM	
....4	R948	2001-000429	R-CARBON;1KOHM,5%,1/8W,AA,TP,1.8X3.2MM	
....4	R949	2001-000591	R-CARBON;3.3KOHM,5%,1/8W,AA,TP,1.8X3.2M	
....4	R950	2001-000429	R-CARBON;1KOHM,5%,1/8W,AA,TP,1.8X3.2MM	
....4	R951	2001-000591	R-CARBON;3.3KOHM,5%,1/8W,AA,TP,1.8X3.2M	
....4	R952	2001-000281	R-CARBON;100OHM,5%,1/8W,AA,TP,1.8X3.2MM	
....4	R953	2001-000734	R-CARBON;4.7KOHM,5%,1/8W,AA,TP,1.8X3.2M	
....4	R954	2001-000281	R-CARBON;100OHM,5%,1/8W,AA,TP,1.8X3.2MM	
....4	R955	2001-000734	R-CARBON;4.7KOHM,5%,1/8W,AA,TP,1.8X3.2M	
....4	R958	2001-000281	R-CARBON;100OHM,5%,1/8W,AA,TP,1.8X3.2MM	
....4	R959	2001-000281	R-CARBON;100OHM,5%,1/8W,AA,TP,1.8X3.2MM	
....4	R960	2001-000281	R-CARBON;100OHM,5%,1/8W,AA,TP,1.8X3.2MM	
....4	R961	2001-000734	R-CARBON;4.7KOHM,5%,1/8W,AA,TP,1.8X3.2M	
....4	R962	2001-000864	R-CARBON;56KOHM,5%,1/8W,AA,TP,1.8X3.2MM	
....4	R967	2001-000429	R-CARBON;1KOHM,5%,1/8W,AA,TP,1.8X3.2MM	
....4	R968	2001-000429	R-CARBON;1KOHM,5%,1/8W,AA,TP,1.8X3.2MM	
....4	R970	2001-000472	R-CARBON;2.7KOHM,5%,1/8W,AA,TP,1.8X3.2M	
....4	R971	2001-000780	R-CARBON;470OHM,5%,1/8W,AA,TP,1.8X3.2MM	
....4	R974	2001-000734	R-CARBON;4.7KOHM,5%,1/8W,AA,TP,1.8X3.2M	
....4	R977	2001-001062	R-CARBON(S);10MOHM,5%,1/2W,AA,TP,2.4X6.4	

Level	Loc. No.	Code No.	Description ; Specification	Remark
....4	R979	2001-000281	R-CARBON;100OHM,5%,1/8W,AA,TP,1.8X3.2MM	
....4	R980	2001-000290	R-CARBON;10KOHM,5%,1/8W,AA,TP,1.8X3.2MM	
....4	R981	2001-000577	R-CARBON;2KOHM,5%,1/8W,AA,TP,1.8X3.2MM	
....4	R982	2001-000577	R-CARBON;2KOHM,5%,1/8W,AA,TP,1.8X3.2MM	
....4	R983	2001-000577	R-CARBON;2KOHM,5%,1/8W,AA,TP,1.8X3.2MM	
....4	R984	2001-000429	R-CARBON;1KOHM,5%,1/8W,AA,TP,1.8X3.2MM	
....4	R985	2001-000786	R-CARBON;47KOHM,5%,1/8W,AA,TP,1.8X3.2MM	
....4	R986	2001-000429	R-CARBON;1KOHM,5%,1/8W,AA,TP,1.8X3.2MM	
....4	R987	2001-000780	R-CARBON;470OHM,5%,1/8W,AA,TP,1.8X3.2MM	
....4	R988	2001-000281	R-CARBON;100OHM,5%,1/8W,AA,TP,1.8X3.2MM	
....4	R989	2001-000281	R-CARBON;100OHM,5%,1/8W,AA,TP,1.8X3.2MM	
....4	R990	2001-000281	R-CARBON;100OHM,5%,1/8W,AA,TP,1.8X3.2MM	
....4	R991	2001-000281	R-CARBON;100OHM,5%,1/8W,AA,TP,1.8X3.2MM	
....4	R992	2001-000472	R-CARBON;2.7KOHM,5%,1/8W,AA,TP,1.8X3.2M	
....4	R993	2001-000281	R-CARBON;100OHM,5%,1/8W,AA,TP,1.8X3.2MM	
....4	R994	2001-000281	R-CARBON;100OHM,5%,1/8W,AA,TP,1.8X3.2MM	
....4	RD901	2001-000281	R-CARBON;100OHM,5%,1/8W,AA,TP,1.8X3.2MM	
....4	RD903	2001-000734	R-CARBON;4.7KOHM,5%,1/8W,AA,TP,1.8X3.2M	
....4	RF802	2008-000294	R-FUSIBLE(S);33ohm,5%,2W,AF,TP,3.9x10mm	
....4	RS801	2003-002194	R-METAL OXIDE(S);1.8Kohm,5%,1W,AF,TP,2.5	
....4	RS802	2001-001192	R-CARBON(S);820OHM,5%,1/2W,AA,TP,2.4X6.4	
....4	RS803	2001-001159	R-CARBON(S);510OHM,5%,1/2W,AA,TP,2.4X6.4	
....4	RS804	2001-001182	R-CARBON(S);7.5KOHM,5%,1/2W,AA,TP,2.4X6.	
....4	RS805	2001-001107	R-CARBON(S);220ohm,5%,1/2W,AA,TP,2.4x6.4	
....4	RS806	2001-001159	R-CARBON(S);510OHM,5%,1/2W,AA,TP,2.4X6.4	
....4	RS807	2001-000739	R-CARBON;4.7MOHM,5%,1/8W,AA,TP,1.8X3.2M	
....4	RZ153	2008-001086	R-FUSIBLE(S);3.3ohm,5%,2W,AG,TP,3.9x12mm	
....4	RZ154	2003-000532	R-METAL OXIDE(S);18ohm,5%,2W,AF,TP,4x12m	
....4	RZ156	2001-001159	R-CARBON(S);510OHM,5%,1/2W,AA,TP,2.4X6.4	
....4	RZ165	2001-000331	R-CARBON;12KOHM,5%,1/8W,AA,TP,1.8X3.2MM	
....4	RZ166	2001-000258	R-CARBON;1.8KOHM,5%,1/8W,AA,TP,1.8X3.2M	
....4	RZ167	2001-000258	R-CARBON;1.8KOHM,5%,1/8W,AA,TP,1.8X3.2M	
....4	RZ167A	2001-000554	R-CARBON;270OHM,5%,1/8W,AA,TP,1.8X3.2MM	
....4	RZ168	2003-002157	R-METAL OXIDE;220OHM,5%,2W,AG,TP,6X16MM	
....4	RZ169	2001-000019	R-CARBON(S);10OHM,5%,1/2W,AA,TP,2.4X6.4M	
....4	RZ170	2001-000666	R-CARBON;33OHM,5%,1/8W,AA,TP,1.8X3.2MM	
....4	RZ171	2001-000666	R-CARBON;33OHM,5%,1/8W,AA,TP,1.8X3.2MM	
....4	RZ172	2001-000241	R-CARBON;1.5KOHM,5%,1/8W,AA,TP,1.8X3.2M	
....4	RZ173	2001-001139	R-CARBON(S);39KOHM,5%,1/2W,AA,TP,2.4X6.4	
....4	RZ174	2001-001139	R-CARBON(S);39KOHM,5%,1/2W,AA,TP,2.4X6.4	
....4	RZ175	2001-000241	R-CARBON;1.5KOHM,5%,1/8W,AA,TP,1.8X3.2M	
....4	RZ176	2001-000221	R-CARBON;1.2KOHM,5%,1/8W,AA,TP,1.8X3.2M	
....4	RZ177	2001-000331	R-CARBON;12KOHM,5%,1/8W,AA,TP,1.8X3.2MM	
....4	RZ178	2001-000221	R-CARBON;1.2KOHM,5%,1/8W,AA,TP,1.8X3.2M	
....4	RZ179	2003-000713	R-METAL OXIDE(S);47ohm,5%,2W,AF,TP,4x12m	
....4	RZ180	2001-001100	R-CARBON(S);2.7OHM,5%,1/2W,AA,TP,2.4X6.4	
....4	RZ181	2001-001100	R-CARBON(S);2.7OHM,5%,1/2W,AA,TP,2.4X6.4	
....4	RZ182	2003-000713	R-METAL OXIDE(S);47ohm,5%,2W,AF,TP,4x12m	
....4	RZ183	2003-002157	R-METAL OXIDE;220OHM,5%,2W,AG,TP,6X16MM	
....4	RZ184	2003-002157	R-METAL OXIDE;220OHM,5%,2W,AG,TP,6X16MM	
....4	VR101	2103-000672	VR-SEMI;20Kohm,25%,1/5W,TOP	
..2		AA95-00427A	ASSY-SOUND;-,SP43J5P3S/XTT,J51A,-,-,CHIN	
...3	CN601A	3711-003626	CONNECTOR-HEADER;NOWALL,20P,1R,2.5mm,ANG	
...3	CN602A	3711-003626	CONNECTOR-HEADER;NOWALL,20P,1R,2.5mm,ANG	
...3	LD603	2701-000170	INDUCTOR-AXIAL;3.9uH,10%,3x7mm	
...3		AA99-20060M	ASSY-PCB SUB,AUTO; AA95-00427A ,V	S.N.A
....4	C614	2401-000962	C-AL;22uF,20%,50V,GP,TP,5x11,5	
....4	C615	2203-000595	C-CERAMIC,CHIP;0.22nF,5%,50V,NP0,TP,2012	
....4	C616	2203-000938	C-CERAMIC,CHIP;0.47nF,5%,50V,NP0,TP,2012	
....4	C617	2203-000142	C-CERAMIC,CHIP;1.5nF,10%,50V,X7R,TP,2012	
....4	C618	2203-000444	C-CERAMIC,CHIP;1nF,10%,50V,X7R,TP,2012,-	
....4	C619	2203-000444	C-CERAMIC,CHIP;1nF,10%,50V,X7R,TP,2012,-	
....4	C620	2401-000660	C-AL;2.2uF,20%,50V,GP,TP,5x11,5	
....4	C621	2401-000660	C-AL;2.2uF,20%,50V,GP,TP,5x11,5	
....4	C622	2203-000701	C-CERAMIC,CHIP;0.002nF,0.25pF,50V,NP0,TP	
....4	C623	2203-000701	C-CERAMIC,CHIP;0.002nF,0.25pF,50V,NP0,TP	
....4	C624	2203-001077	C-CERAMIC,CHIP;0.056nF,5%,50V,NP0,TP,201	
....4	C625	2203-001077	C-CERAMIC,CHIP;0.056nF,5%,50V,NP0,TP,201	
....4	C626	2401-000962	C-AL;22uF,20%,50V,GP,TP,5x11,5	
....4	C627	2203-000938	C-CERAMIC,CHIP;0.47nF,5%,50V,NP0,TP,2012	
....4	C628	2203-000142	C-CERAMIC,CHIP;1.5nF,10%,50V,X7R,TP,2012	
....4	C629	2203-001077	C-CERAMIC,CHIP;0.056nF,5%,50V,NP0,TP,201	
....4	C630	2401-000480	C-AL;10uF,20%,50V,GP,TP,5x11,5	
....4	C631	2203-000218	C-CERAMIC,CHIP;100nF,20%,50V,Y5V,TP,2012	
....4	C632	2401-002229	C-AL;470nF,20%,50V,WT,TP,5x11,5	
....4	C633	2401-002229	C-AL;470nF,20%,50V,WT,TP,5x11,5	
....4	C634	2203-000784	C-CERAMIC,CHIP;0.33nF,5%,50V,NP0,TP,2012	

Level	Loc. No.	Code No.	Description ; Specification	Remark
....4	C635	2203-000784	C-CERAMIC,CHIP;0.33nF,5%,50V,NP0,TP,2012	
....4	C636	2203-000218	C-CERAMIC,CHIP;100nF,20%,50V,Y5V,TP,2012	
....4	C637	2401-000027	C-AL;4.7uF,20%,50V,GP,TP,5x11,5	
....4	C638	2401-002235	C-AL;10uF,20%,16V,GP,TP,5x11mm,5mm	
....4	C639	2401-002235	C-AL;10uF,20%,16V,GP,TP,5x11mm,5mm	
....4	C640	2203-000938	C-CERAMIC,CHIP;0.47nF,5%,50V,NP0,TP,2012	
....4	C641	2203-000142	C-CERAMIC,CHIP;1.5nF,10%,50V,X7R,TP,2012	
....4	C642	2401-000480	C-AL;10uF,20%,50V,GP,TP,5x11,5	
....4	C643	2401-000027	C-AL;4.7uF,20%,50V,GP,TP,5x11,5	
....4	C644	2401-000027	C-AL;4.7uF,20%,50V,GP,TP,5x11,5	
....4	C645	2401-000027	C-AL;4.7uF,20%,50V,GP,TP,5x11,5	
....4	C646	2401-000027	C-AL;4.7uF,20%,50V,GP,TP,5x11,5	
....4	C649	2401-002300	C-AL;47uF,20%,50V,GP,TP,6.3x11,5	
....4	C650	2203-000979	C-CERAMIC,CHIP;47nF,10%,50V,X7R,TP,2012	
....4	C651	2401-000365	C-AL;100uF,20%,50V,WT,TP,10x12.5mm,	
....4	C653	2203-000784	C-CERAMIC,CHIP;0.33nF,5%,50V,NP0,TP,2012	
....4	C654	2401-002229	C-AL;470nF,20%,50V,WT,TP,5x11,5	
....4	C655	2203-000784	C-CERAMIC,CHIP;0.33nF,5%,50V,NP0,TP,2012	
....4	C656	2401-002229	C-AL;470nF,20%,50V,WT,TP,5x11,5	
....4	C657	2401-002229	C-AL;470nF,20%,50V,WT,TP,5x11,5	
....4	C658	2203-000784	C-CERAMIC,CHIP;0.33nF,5%,50V,NP0,TP,2012	
....4	C661	2203-000784	C-CERAMIC,CHIP;0.33nF,5%,50V,NP0,TP,2012	
....4	C662	2401-002229	C-AL;470nF,20%,50V,WT,TP,5x11,5	
....4	C663	2401-002229	C-AL;470nF,20%,50V,WT,TP,5x11,5	
....4	C664	2203-000784	C-CERAMIC,CHIP;0.33nF,5%,50V,NP0,TP,2012	
....4	C667	2203-000784	C-CERAMIC,CHIP;0.33nF,5%,50V,NP0,TP,2012	
....4	C668	2401-002229	C-AL;470nF,20%,50V,WT,TP,5x11,5	
....4	C669	2401-002229	C-AL;470nF,20%,50V,WT,TP,5x11,5	
....4	C670	2203-000784	C-CERAMIC,CHIP;0.33nF,5%,50V,NP0,TP,2012	
....4	C684	2401-000480	C-AL;10uF,20%,50V,GP,TP,5x11,5	
....4	C688	2401-000962	C-AL;22uF,20%,50V,GP,TP,5x11,5	
....4	C691	2401-000962	C-AL;22uF,20%,50V,GP,TP,5x11,5	
....4	C692	2203-000260	C-CERAMIC,CHIP;10nF,10%,50V,X7R,TP,2012	
....4	C695	2203-000761	C-CERAMIC,CHIP;330nF,10%,16V,X7R,TP,2012	
....4	C696	2203-000170	C-CERAMIC,CHIP;1.8nF,10%,50V,X7R,TP,2012	
....4	C697	2203-000170	C-CERAMIC,CHIP;1.8nF,10%,50V,X7R,TP,2012	
....4	CB1	2401-000365	C-AL;100uF,20%,50V,WT,TP,10x12.5mm,	
....4	CD601	2203-000260	C-CERAMIC,CHIP;10nF,10%,50V,X7R,TP,2012	
....4	CD602	2203-000142	C-CERAMIC,CHIP;1.5nF,10%,50V,X7R,TP,2012	
....4	CD603	2401-000962	C-AL;22uF,20%,50V,GP,TP,5x11,5	
....4	CD604	2203-000595	C-CERAMIC,CHIP;0.22nF,5%,50V,NP0,TP,2012	
....4	CD605	2203-000938	C-CERAMIC,CHIP;0.47nF,5%,50V,NP0,TP,2012	
....4	CD606	2401-000962	C-AL;22uF,20%,50V,GP,TP,5x11,5	
....4	CD607	2203-000938	C-CERAMIC,CHIP;0.47nF,5%,50V,NP0,TP,2012	
....4	CD608	2203-000142	C-CERAMIC,CHIP;1.5nF,10%,50V,X7R,TP,2012	
....4	CD609	2203-000218	C-CERAMIC,CHIP;100nF,20%,50V,Y5V,TP,2012	
....4	CD610	2401-000480	C-AL;10uF,20%,50V,GP,TP,5x11,5	
....4	CD611	2203-000218	C-CERAMIC,CHIP;100nF,20%,50V,Y5V,TP,2012	
....4	CD612	2401-000027	C-AL;4.7uF,20%,50V,GP,TP,5x11,5	
....4	CD613	2401-000660	C-AL;2.2uF,20%,50V,GP,TP,5x11,5	
....4	CD615	2401-000660	C-AL;2.2uF,20%,50V,GP,TP,5x11,5	
....4	CD616	2203-000444	C-CERAMIC,CHIP;1nF,10%,50V,X7R,TP,2012,-	
....4	CD618	2203-000444	C-CERAMIC,CHIP;1nF,10%,50V,X7R,TP,2012,-	
....4	CD619	2401-002235	C-AL;10uF,20%,16V,GP,TP,5x11mm,5mm	
....4	CD620	2401-002235	C-AL;10uF,20%,16V,GP,TP,5x11mm,5mm	
....4	CD621	2203-000938	C-CERAMIC,CHIP;0.47nF,5%,50V,NP0,TP,2012	
....4	CD622	2203-000142	C-CERAMIC,CHIP;1.5nF,10%,50V,X7R,TP,2012	
....4	CD623	2401-000480	C-AL;10uF,20%,50V,GP,TP,5x11,5	
....4	CD624	2203-000495	C-CERAMIC,CHIP;2.2nF,10%,50V,X7R,TP,2012	
....4	CD625	2401-000962	C-AL;22uF,20%,50V,GP,TP,5x11,5	
....4	CD626	2203-000495	C-CERAMIC,CHIP;2.2nF,10%,50V,X7R,TP,2012	
....4	CD627	2401-000962	C-AL;22uF,20%,50V,GP,TP,5x11,5	
....4	CD628	2203-000260	C-CERAMIC,CHIP;10nF,10%,50V,X7R,TP,2012	
....4	CD629	2401-000365	C-AL;100uF,20%,50V,WT,TP,10x12.5mm,	
....4	CD630	2203-000761	C-CERAMIC,CHIP;330nF,10%,16V,X7R,TP,2012	
....4	CDB1	2401-000365	C-AL;100uF,20%,50V,WT,TP,10x12.5mm,	
⚠ 4	IC601	1204-001689	IC-SOUND PROCESSOR;MSP3410D-C5,PLCC,68P,	
⚠ 4	IC604	1201-000541	IC-OP AMP;062,SOP,8P,153MIL,DUAL,6V/mV,P	
⚠ 4	ICD601	1204-001198	IC-DECODER;DPL3519A-A2,PLCC,68P,-,PLASTI	
⚠ 4	ICD602	1201-000541	IC-OP AMP;062,SOP,8P,153MIL,DUAL,6V/mV,P	
....4	L601	2701-000170	INDUCTOR-AXIAL;3.9uH,10%,3x7mm	
....4	L602	2701-000170	INDUCTOR-AXIAL;3.9uH,10%,3x7mm	
....4	L603	2701-000112	INDUCTOR-AXIAL;100uH,10%,3x7mm	
....4	LD601	2701-000170	INDUCTOR-AXIAL;3.9uH,10%,3x7mm	
....4	LD602	2701-000112	INDUCTOR-AXIAL;100uH,10%,3x7mm	
....4	PCB	AA41-00087A	PCB-AUDIO;PLT51A,2L,FR-4,180X245X1.6T,3A	S.N.A
....4	Q606	0501-000727	TR-SMALL SIGNAL;BC848C,NPN,310mW,SOT-23,	

Level	Loc. No.	Code No.	Description ; Specification	Remark
....4	Q607	0501-000727	TR-SMALL SIGNAL;BC848C,NPN,310mW,SOT-23,	
....4	R601	2007-000029	R-CHIP;0OHM,5%,1/10W,DA,TP,2012	
....4	R602	2007-000029	R-CHIP;0OHM,5%,1/10W,DA,TP,2012	
....4	R610	2007-000290	R-CHIP;100OHM,5%,1/10W,DA,TP,2012	
....4	R611	2007-000290	R-CHIP;100OHM,5%,1/10W,DA,TP,2012	
....4	R614	2007-000468	R-CHIP;1KOHM,5%,1/10W,DA,TP,2012	
....4	R617	2007-000931	R-CHIP;470OHM,5%,1/10W,DA,TP,2012	
....4	R618	2007-000931	R-CHIP;470OHM,5%,1/10W,DA,TP,2012	
....4	R619	2007-000290	R-CHIP;100OHM,5%,1/10W,DA,TP,2012	
....4	R620	2007-000290	R-CHIP;100OHM,5%,1/10W,DA,TP,2012	
....4	R621	2007-000290	R-CHIP;100OHM,5%,1/10W,DA,TP,2012	
....4	R622	2007-000290	R-CHIP;100OHM,5%,1/10W,DA,TP,2012	
....4	R623	2007-000477	R-CHIP;1MOHM,5%,1/10W,DA,TP,2012	
....4	R624	2007-000477	R-CHIP;1MOHM,5%,1/10W,DA,TP,2012	
....4	R625	2007-000477	R-CHIP;1MOHM,5%,1/10W,DA,TP,2012	
....4	R626	2007-000477	R-CHIP;1MOHM,5%,1/10W,DA,TP,2012	
....4	R632	2007-000931	R-CHIP;470OHM,5%,1/10W,DA,TP,2012	
....4	R633	2007-000931	R-CHIP;470OHM,5%,1/10W,DA,TP,2012	
....4	R634	2007-000931	R-CHIP;470OHM,5%,1/10W,DA,TP,2012	
....4	R635	2007-000931	R-CHIP;470OHM,5%,1/10W,DA,TP,2012	
....4	R636	2007-000931	R-CHIP;470OHM,5%,1/10W,DA,TP,2012	
....4	R637	2007-000931	R-CHIP;470OHM,5%,1/10W,DA,TP,2012	
....4	R638	2007-000931	R-CHIP;470OHM,5%,1/10W,DA,TP,2012	
....4	R660	2007-000872	R-CHIP;4.7KOHM,5%,1/10W,DA,TP,2012	
....4	R661	2007-000872	R-CHIP;4.7KOHM,5%,1/10W,DA,TP,2012	
....4	R664	2007-001177	R-CHIP;8.2KOHM,5%,1/10W,DA,TP,2012	
....4	R665	2007-000774	R-CHIP;33KOHM,5%,1/10W,DA,TP,2012	
....4	R666	2007-000872	R-CHIP;4.7KOHM,5%,1/10W,DA,TP,2012	
....4	R669	2007-001177	R-CHIP;8.2KOHM,5%,1/10W,DA,TP,2012	
....4	R670	2007-000774	R-CHIP;33KOHM,5%,1/10W,DA,TP,2012	
....4	R672	2007-000586	R-CHIP;22KOHM,5%,1/10W,DA,TP,2012	
....4	R673	2007-000586	R-CHIP;22KOHM,5%,1/10W,DA,TP,2012	
....4	R674	2007-000300	R-CHIP;10KOHM,5%,1/10W,DA,TP,2012	
....4	R675	2007-000300	R-CHIP;10KOHM,5%,1/10W,DA,TP,2012	
....4	RB1	2007-000941	R-CHIP;47KOHM,5%,1/10W,DA,TP,2012	
....4	RB2	2007-000941	R-CHIP;47KOHM,5%,1/10W,DA,TP,2012	
....4	RB3	2007-000328	R-CHIP;11KOHM,5%,1/10W,DA,TP,2012	
....4	RB4	2007-000328	R-CHIP;11KOHM,5%,1/10W,DA,TP,2012	
....4	RD601	2007-000468	R-CHIP;1KOHM,5%,1/10W,DA,TP,2012	
....4	RD602	2007-000872	R-CHIP;4.7KOHM,5%,1/10W,DA,TP,2012	
....4	RD604	2007-001177	R-CHIP;8.2KOHM,5%,1/10W,DA,TP,2012	
....4	RD605	2007-000774	R-CHIP;33KOHM,5%,1/10W,DA,TP,2012	
....4	RD610	2007-001177	R-CHIP;8.2KOHM,5%,1/10W,DA,TP,2012	
....4	RD611	2007-000774	R-CHIP;33KOHM,5%,1/10W,DA,TP,2012	
....4	RD627	2007-000872	R-CHIP;4.7KOHM,5%,1/10W,DA,TP,2012	
....4	RDB1	2007-000941	R-CHIP;47KOHM,5%,1/10W,DA,TP,2012	
....4	RDB2	2007-000941	R-CHIP;47KOHM,5%,1/10W,DA,TP,2012	
....4	RDB3	2007-000328	R-CHIP;11KOHM,5%,1/10W,DA,TP,2012	
....4	RDB4	2007-000328	R-CHIP;11KOHM,5%,1/10W,DA,TP,2012	
....4	X601	2801-000186	CRYSTAL-UNIT;18.432MHz,25ppm,28-AAM,8pF,	
...3		AA63-40273A	SHIELD-CASE;-,SPTE,T0.5,-,CX724AHD	
...3		0202-000187	SOLDER-WIRE FLUX;-,RS60S,D1.2,63Sn/37Pb	S.N.A
..2		0202-000187	SOLDER-WIRE FLUX;-,RS60S,D1.2,63Sn/37Pb	S.N.A
..2		AA65-30104B	CLAMP-WIRE;NYLON 66,V2,BLK,W2 Z5,ALL MOD	S.N.A
..2		AA65-30013A	CLAMP-WIRE;NYLON-66,V0,NTR,DAWH-45N,-,-	S.N.A
..2		AA59-40003P	MODULE-FOCUS,PACK;-,F300,NTSC,43,64x62,	
..2		3301-001201	CORE-FERRITE;AE,230.5x10.25x36mm,1500,28	
..2		AA39-20577A	LEAD CONNECTOR-ASSY;-,-,-,6(3)P,-,-,-,YF	
..2		AA39-20010C	LEAD CONNECTOR-ASSY;-,YFH800-01,S,1P,600	
..2		AA65-30105A	CLAMP-WIRE;NYLON 66,V2,NTR,15MM,ALL MODE	S.N.A
..2		AA95-00007A	ASSY-F/CONVERTER;-,SVP-434JM,KPT51A,NTSC	
...3	CON01	3711-002709	CONNECTOR-HEADER;NOWALL,12P,1R,2.5MM,ANG	
...3	CON02	3711-002703	CONNECTOR-HEADER;NOWALL,5P,1R,2.5mm,ANGL	
⚠ ...3	IC03	AA13-30021E	IC-MCU;Z90234-R3911,SZM-374FC,ST,24K,	
⚠ ...3	IC04	1103-001208	IC-EEPROM;AT24C02-PC27 C,256x8Bit,DIP,8P	
...3	S/CASE	AA63-40037A	SHIELD-CASE;-,SPTE,T0.5,SCT12A,-	S.N.A
...3	XTR01	2804-001213	OSCILLATOR-CLOCK;80MHz,100ppm,10TTL & CM	
...3		AA99-20043V	ASSY-PCB SUB,AUTO; AA95-00007A ,V	S.N.A
....4	CF10	2203-000260	C-CERAMIC,CHIP;10nF,10%,50V,X7R,TP,2012	
....4	CF11	2401-001840	C-AL;100uF,20%,16V,GP,TP,6.3x11,5	
....4	CF12	2203-000218	C-CERAMIC,CHIP;100nF,20%,50V,Y5V,TP,2012	
....4	CF13	2401-001513	C-AL;47uF,20%,16V,WT,TP,5x11,5	
....4	CF14	2203-000218	C-CERAMIC,CHIP;100nF,20%,50V,Y5V,TP,2012	
....4	CF15	2203-000429	C-CERAMIC,CHIP;0.018nF,5%,50V,NP0,TP,201	
....4	CF16	2203-000634	C-CERAMIC,CHIP;0.022nF,5%,50V,NP0,TP,201	
....4	CF17	2203-000429	C-CERAMIC,CHIP;0.018nF,5%,50V,NP0,TP,201	

Level	Loc. No.	Code No.	Description ; Specification	Remark
....4	CF18	2203-000683	C-CERAMIC,CHIP;0.027nF,5%,50V,NP0,TP,201	
....4	CF19	2203-000218	C-CERAMIC,CHIP;100nF,20%,50V,Y5V,TP,2012	
....4	CF21	2203-000218	C-CERAMIC,CHIP;100nF,20%,50V,Y5V,TP,2012	
....4	CF22	2203-000218	C-CERAMIC,CHIP;100nF,20%,50V,Y5V,TP,2012	
....4	CF23	2401-001513	C-AL;47uF,20%,16V,WT,TP,5x11,5	
....4	CF24	2203-000218	C-CERAMIC,CHIP;100nF,20%,50V,Y5V,TP,2012	
....4	CF25	2203-000218	C-CERAMIC,CHIP;100nF,20%,50V,Y5V,TP,2012	
....4	CF26	2203-000218	C-CERAMIC,CHIP;100nF,20%,50V,Y5V,TP,2012	
....4	CF27	2203-000218	C-CERAMIC,CHIP;100nF,20%,50V,Y5V,TP,2012	
....4	CF28	2401-001513	C-AL;47uF,20%,16V,WT,TP,5x11,5	
....4	CF29	2401-001513	C-AL;47uF,20%,16V,WT,TP,5x11,5	
....4	CF30	2203-000218	C-CERAMIC,CHIP;100nF,20%,50V,Y5V,TP,2012	
....4	CF31	2203-000218	C-CERAMIC,CHIP;100nF,20%,50V,Y5V,TP,2012	
....4	CF32	2203-000218	C-CERAMIC,CHIP;100nF,20%,50V,Y5V,TP,2012	
....4	CF33	2203-000218	C-CERAMIC,CHIP;100nF,20%,50V,Y5V,TP,2012	
....4	CF34	2203-000218	C-CERAMIC,CHIP;100nF,20%,50V,Y5V,TP,2012	
....4	CF35	2203-000218	C-CERAMIC,CHIP;100nF,20%,50V,Y5V,TP,2012	
....4	CF37	2203-000218	C-CERAMIC,CHIP;100nF,20%,50V,Y5V,TP,2012	
....4	CF38	2401-001513	C-AL;47uF,20%,16V,WT,TP,5x11,5	
....4	CF39	2203-000218	C-CERAMIC,CHIP;100nF,20%,50V,Y5V,TP,2012	
....4	CF40	2203-000218	C-CERAMIC,CHIP;100nF,20%,50V,Y5V,TP,2012	
....4	CF41	2203-000218	C-CERAMIC,CHIP;100nF,20%,50V,Y5V,TP,2012	
....4	CF42	2203-000218	C-CERAMIC,CHIP;100nF,20%,50V,Y5V,TP,2012	
....4	CF44	2404-000151	C-TA,CHIP;1uF,20%,16V,-,TP,3216,-	
....4	CF45	2203-001158	C-CERAMIC,CHIP;0.068nF,5%,50V,NP0,TP,201	
....4	CF46	2404-000151	C-TA,CHIP;1uF,20%,16V,-,TP,3216,-	
....4	CF47	2203-001158	C-CERAMIC,CHIP;0.068nF,5%,50V,NP0,TP,201	
....4	CF48	2404-000151	C-TA,CHIP;1uF,20%,16V,-,TP,3216,-	
....4	CF49	2203-001158	C-CERAMIC,CHIP;0.068nF,5%,50V,NP0,TP,201	
....4	CF50	2203-000218	C-CERAMIC,CHIP;100nF,20%,50V,Y5V,TP,2012	
....4	CF51	2203-000218	C-CERAMIC,CHIP;100nF,20%,50V,Y5V,TP,2012	
....4	CF52	2203-000316	C-CERAMIC,CHIP;0.12nF,5%,50V,NP0,TP,2012	
....4	CF53	2203-000316	C-CERAMIC,CHIP;0.12nF,5%,50V,NP0,TP,2012	
....4	CF54	2404-001229	C-TA,CHIP;4.7uF,20%,25V,GP,TP,3528	
....4	CF55	2203-000218	C-CERAMIC,CHIP;100nF,20%,50V,Y5V,TP,2012	
....4	CF56	2203-000260	C-CERAMIC,CHIP;10nF,10%,50V,X7R,TP,2012	
....4	CF57	2404-001229	C-TA,CHIP;4.7uF,20%,25V,GP,TP,3528	
....4	CF58	2203-000218	C-CERAMIC,CHIP;100nF,20%,50V,Y5V,TP,2012	
....4	CF60	2401-001840	C-AL;100uF,20%,16V,GP,TP,6.3x11,5	
....4	CF61	2203-000218	C-CERAMIC,CHIP;100nF,20%,50V,Y5V,TP,2012	
....4	CF62	2401-001513	C-AL;47uF,20%,16V,WT,TP,5x11,5	
....4	CF63	2203-000218	C-CERAMIC,CHIP;100nF,20%,50V,Y5V,TP,2012	
....4	CF64	2203-000218	C-CERAMIC,CHIP;100nF,20%,50V,Y5V,TP,2012	
....4	CF65	2203-000218	C-CERAMIC,CHIP;100nF,20%,50V,Y5V,TP,2012	
....4	CF66	2401-001513	C-AL;47uF,20%,16V,WT,TP,5x11,5	
....4	CF67	2203-000218	C-CERAMIC,CHIP;100nF,20%,50V,Y5V,TP,2012	
....4	CF68	2203-000218	C-CERAMIC,CHIP;100nF,20%,50V,Y5V,TP,2012	
....4	CF69	2203-000218	C-CERAMIC,CHIP;100nF,20%,50V,Y5V,TP,2012	
....4	CF70	2203-000218	C-CERAMIC,CHIP;100nF,20%,50V,Y5V,TP,2012	
....4	CF71	2203-000218	C-CERAMIC,CHIP;100nF,20%,50V,Y5V,TP,2012	
....4	CF72	2203-000218	C-CERAMIC,CHIP;100nF,20%,50V,Y5V,TP,2012	
....4	CF75	2401-001840	C-AL;100uF,20%,16V,GP,TP,6.3x11,5	
....4	CF76	2203-000218	C-CERAMIC,CHIP;100nF,20%,50V,Y5V,TP,2012	
....4	CF77	2203-000429	C-CERAMIC,CHIP;0.018nF,5%,50V,NP0,TP,201	
....4	CF78	2203-000429	C-CERAMIC,CHIP;0.018nF,5%,50V,NP0,TP,201	
....4	CF79	2401-000027	C-AL;4.7uF,20%,50V,GP,TP,5x11,5	
....4	CF80	2203-000218	C-CERAMIC,CHIP;100nF,20%,50V,Y5V,TP,2012	
....4	CF81	2203-000218	C-CERAMIC,CHIP;100nF,20%,50V,Y5V,TP,2012	
....4	CF84	2203-000858	C-CERAMIC,CHIP;0.039nF,5%,50V,NP0,TP,201	
....4	CF85	2203-000839	C-CERAMIC,CHIP;0.39nF,5%,50V,NP0,TP,2012	
....4	CF86	2203-000858	C-CERAMIC,CHIP;0.039nF,5%,50V,NP0,TP,201	
....4	CF87	2203-000839	C-CERAMIC,CHIP;0.39nF,5%,50V,NP0,TP,2012	
....4	CF88	2203-000858	C-CERAMIC,CHIP;0.039nF,5%,50V,NP0,TP,201	
....4	CF89	2203-000839	C-CERAMIC,CHIP;0.39nF,5%,50V,NP0,TP,2012	
....4	DF01	0401-000008	DIODE-SWITCHING;DAN217,80V,100mA,SOT-23,	
....4	DF02	0401-000008	DIODE-SWITCHING;DAN217,80V,100mA,SOT-23,	
....4	DF03	0401-000008	DIODE-SWITCHING;DAN217,80V,100mA,SOT-23,	
....4	FF13	2901-000226	FILTER-EMI SMD;25V,0.3A,-,100pF,3.2x1.25	
....4	FF14	2901-000226	FILTER-EMI SMD;25V,0.3A,-,100pF,3.2x1.25	
....4	FF15	2901-000233	FILTER-EMI SMD;50V,0.3A,-,330pF,4.5x3.2x	
....4	FF16	2901-000233	FILTER-EMI SMD;50V,0.3A,-,330pF,4.5x3.2x	
....4	FF17	2901-000233	FILTER-EMI SMD;50V,0.3A,-,330pF,4.5x3.2x	
⚠ 4	IC01	1204-001406	IC-VIDEO PROCESS;FS310KBC,QFP,128P,1100M	
⚠ 4	IC02	1105-001270	IC-DRAM;72V161621,2x524Kx16BITBit,TSOP	
⚠ 4	IC05	1203-001419	IC-VOLTAGE REGULATOR;4931,TO-252,3P,6.6x	
....4	LF10	2901-000297	FILTER-EMI ON BOARD;-,3A,-,-,3.5x5,TP,-	

Level	Loc. No.	Code No.	Description ; Specification	Remark
....4	LF11	2701-000116	INDUCTOR-AXIAL;10uH,10%,4.2x9.8mm	
....4	LF12	2701-000115	INDUCTOR-AXIAL;10uH,10%,3x7mm	
....4	LF13	2701-000115	INDUCTOR-AXIAL;10uH,10%,3x7mm	
....4	LF14	2701-000115	INDUCTOR-AXIAL;10uH,10%,3x7mm	
....4	LF15	2701-000115	INDUCTOR-AXIAL;10uH,10%,3x7mm	
....4	LF16	2701-000149	INDUCTOR-AXIAL;2.7uH,10%,2.5x3.4mm	
....4	LF17	2701-000149	INDUCTOR-AXIAL;2.7uH,10%,2.5x3.4mm	
....4	LF18	2701-000149	INDUCTOR-AXIAL;2.7uH,10%,2.5x3.4mm	
....4	PCB	AA41-10997B	PCB-FORMAT CONNERTER;KPM51A,4L,FR-4,245X	S.N.A
....4	RF11	2007-000290	R-CHIP;100OHM,5%,1/10W,DA,TP,2012	
....4	RF13	2007-000290	R-CHIP;100OHM,5%,1/10W,DA,TP,2012	
....4	RF15	2007-000290	R-CHIP;100OHM,5%,1/10W,DA,TP,2012	
....4	RF16	2007-000477	R-CHIP;1MOHM,5%,1/10W,DA,TP,2012	
....4	RF17	2007-000477	R-CHIP;1MOHM,5%,1/10W,DA,TP,2012	
....4	RF18	2007-000872	R-CHIP;4.7KOHM,5%,1/10W,DA,TP,2012	
....4	RF19	2007-000872	R-CHIP;4.7KOHM,5%,1/10W,DA,TP,2012	
....4	RF21	2007-000642	R-CHIP;270OHM,5%,1/10W,DA,TP,2012	
....4	RF22	2007-001118	R-CHIP;680OHM,5%,1/10W,DA,TP,2012	
....4	RF23	2007-000401	R-CHIP;150OHM,5%,1/10W,DA,TP,2012	
....4	RF24	2007-000401	R-CHIP;150OHM,5%,1/10W,DA,TP,2012	
....4	RF25	2007-000518	R-CHIP;2.7KOHM,5%,1/10W,DA,TP,2012	
....4	RF26	2007-000518	R-CHIP;2.7KOHM,5%,1/10W,DA,TP,2012	
....4	RF27	2007-000290	R-CHIP;100OHM,5%,1/10W,DA,TP,2012	
....4	RF29	2007-000781	R-CHIP;33OHM,5%,1/10W,DA,TP,2012	
....4	RF30	2007-000781	R-CHIP;33OHM,5%,1/10W,DA,TP,2012	
....4	RF31	2007-000781	R-CHIP;33OHM,5%,1/10W,DA,TP,2012	
....4	RF32	2007-000781	R-CHIP;33OHM,5%,1/10W,DA,TP,2012	
....4	RF33	2007-000781	R-CHIP;33OHM,5%,1/10W,DA,TP,2012	
....4	RF34	2007-000781	R-CHIP;33OHM,5%,1/10W,DA,TP,2012	
....4	RF35	2007-000781	R-CHIP;33OHM,5%,1/10W,DA,TP,2012	
....4	RF36	2007-000781	R-CHIP;33OHM,5%,1/10W,DA,TP,2012	
....4	RF37	2007-000781	R-CHIP;33OHM,5%,1/10W,DA,TP,2012	
....4	RF38	2007-000781	R-CHIP;33OHM,5%,1/10W,DA,TP,2012	
....4	RF39	2007-000781	R-CHIP;33OHM,5%,1/10W,DA,TP,2012	
....4	RF40	2007-000781	R-CHIP;33OHM,5%,1/10W,DA,TP,2012	
....4	RF41	2007-000781	R-CHIP;33OHM,5%,1/10W,DA,TP,2012	
....4	RF42	2007-000781	R-CHIP;33OHM,5%,1/10W,DA,TP,2012	
....4	RF43	2007-000781	R-CHIP;33OHM,5%,1/10W,DA,TP,2012	
....4	RF44	2007-000781	R-CHIP;33OHM,5%,1/10W,DA,TP,2012	
....4	RF45	2007-000781	R-CHIP;33OHM,5%,1/10W,DA,TP,2012	
....4	RF46	2007-000781	R-CHIP;33OHM,5%,1/10W,DA,TP,2012	
....4	RF47	2007-000781	R-CHIP;33OHM,5%,1/10W,DA,TP,2012	
....4	RF48	2007-000781	R-CHIP;33OHM,5%,1/10W,DA,TP,2012	
....4	RF49	2007-000781	R-CHIP;33OHM,5%,1/10W,DA,TP,2012	
....4	RF51	2007-000781	R-CHIP;33OHM,5%,1/10W,DA,TP,2012	
....4	RF52	2007-000781	R-CHIP;33OHM,5%,1/10W,DA,TP,2012	
....4	RF53	2007-000781	R-CHIP;33OHM,5%,1/10W,DA,TP,2012	
....4	RF54	2007-000781	R-CHIP;33OHM,5%,1/10W,DA,TP,2012	
....4	RF55	2007-000781	R-CHIP;33OHM,5%,1/10W,DA,TP,2012	
....4	RF56	2007-000781	R-CHIP;33OHM,5%,1/10W,DA,TP,2012	
....4	RF57	2007-000781	R-CHIP;33OHM,5%,1/10W,DA,TP,2012	
....4	RF58	2007-000781	R-CHIP;33OHM,5%,1/10W,DA,TP,2012	
....4	RF59	2007-000781	R-CHIP;33OHM,5%,1/10W,DA,TP,2012	
....4	RF60	2007-000781	R-CHIP;33OHM,5%,1/10W,DA,TP,2012	
....4	RF61	2007-000781	R-CHIP;33OHM,5%,1/10W,DA,TP,2012	
....4	RF62	2007-000781	R-CHIP;33OHM,5%,1/10W,DA,TP,2012	
....4	RF64	2007-000290	R-CHIP;100OHM,5%,1/10W,DA,TP,2012	
....4	RF66	2007-000781	R-CHIP;33OHM,5%,1/10W,DA,TP,2012	
....4	RF67	2007-000781	R-CHIP;33OHM,5%,1/10W,DA,TP,2012	
....4	RF68	2007-000290	R-CHIP;100OHM,5%,1/10W,DA,TP,2012	
....4	RF70	2007-000468	R-CHIP;1KOHM,5%,1/10W,DA,TP,2012	
....4	RF71	2007-000468	R-CHIP;1KOHM,5%,1/10W,DA,TP,2012	
....4	RF72	2007-000468	R-CHIP;1KOHM,5%,1/10W,DA,TP,2012	
....4	RF73	2007-000468	R-CHIP;1KOHM,5%,1/10W,DA,TP,2012	
....4	RF74	2007-000468	R-CHIP;1KOHM,5%,1/10W,DA,TP,2012	
....4	RF75	2007-000468	R-CHIP;1KOHM,5%,1/10W,DA,TP,2012	
....4	RF76	2007-000468	R-CHIP;1KOHM,5%,1/10W,DA,TP,2012	
....4	RF78	2007-000468	R-CHIP;1KOHM,5%,1/10W,DA,TP,2012	
....4	RF79	2007-000468	R-CHIP;1KOHM,5%,1/10W,DA,TP,2012	
....4	RF80	2007-000468	R-CHIP;1KOHM,5%,1/10W,DA,TP,2012	
....4	RF81	2007-000872	R-CHIP;4.7KOHM,5%,1/10W,DA,TP,2012	
....4	RF82	2007-000290	R-CHIP;100OHM,5%,1/10W,DA,TP,2012	
....4	RF83	2007-000468	R-CHIP;1KOHM,5%,1/10W,DA,TP,2012	
....4	RF84	2007-000872	R-CHIP;4.7KOHM,5%,1/10W,DA,TP,2012	
....4	RF85	2007-000872	R-CHIP;4.7KOHM,5%,1/10W,DA,TP,2012	
....4	RF86	2007-001166	R-CHIP;75OHM,5%,1/10W,DA,TP,2012	
....4	RF87	2007-001166	R-CHIP;75OHM,5%,1/10W,DA,TP,2012	
....4	RF88	2007-001166	R-CHIP;75OHM,5%,1/10W,DA,TP,2012	
....4	XTR02	2801-000152	CRYSTAL-UNIT;14.31818MHz,40ppm,28-AAM,16	
....4	XTR04	2801-000724	CRYSTAL-UNIT;6MHz,50ppm,28-AAM,20pF,40oh	
..2		AA65-30109A	CLAMP-FBT;NYLON-66,V2,BLK,-,-,-	S.N.A

ASSY PCB CRT

Level	Loc. No.	Code No.	Description ; Specification	Remark
1	*	AA95-00129M	ASSY PCB CRT;-,J51A,61,PAL,-	
..2	BDW-GN	AA39-20009K	LEAD CONNECTOR-ASSY;-,-,-,1P,-,-,-,YFH80	
..2	C511	2201-000969	C-CERAMIC,DISC;10nF,+80-20%,3.15kV,Y5V,T	
..2	C541	2201-000969	C-CERAMIC,DISC;10nF,+80-20%,3.15kV,Y5V,T	
..2	C571	2201-000969	C-CERAMIC,DISC;10nF,+80-20%,3.15kV,Y5V,T	
..2	CN501	3711-003051	CONNECTOR-HEADER;BOX,8P,1R,2.5mm,STRAGHT	
..2	CN502	3711-003052	CONNECTOR-HEADER;BOX,10P,1R,2.5mm,STRAGH	
..2	CN502B	3711-003052	CONNECTOR-HEADER;BOX,10P,1R,2.5mm,STRAGH	
..2	CN503	3711-003052	CONNECTOR-HEADER;BOX,10P,1R,2.5mm,STRAGH	
..2	CN503B	3711-003052	CONNECTOR-HEADER;BOX,10P,1R,2.5mm,STRAGH	
..2	CNW401	AA39-20027B	LEAD CONNECTOR-ASSY;-,67096-006,S,6P,400	
..2	CNW501	AA39-00127A	LEAD CONNECTOR-ASSY;,-,-,8P,-,-,-,35155-	
..2	CNW502	AA39-00112A	LEAD CONNECTOR-ASSY;,-,-,10P,-,-,-,35155	
..2	CNW503	AA39-00112A	LEAD CONNECTOR-ASSY;,-,-,10P,-,-,-,35155	
..2	FOCUS-	AA39-20115A	LEAD CONNECTOR-ASSY;-,BUSHING,-,1P,500,3	
..2	FOCUS-	AA39-20115A	LEAD CONNECTOR-ASSY;-,BUSHING,-,1P,500,3	
..2	FOCUS-	AA39-20115B	LEAD CONNECTOR-ASSY;-,BUSHING,-,1P,700MM	
..2	GBW-GN	3811-000446	WIRE-PVC CU;TCWA,600V,ROLL,17/0.16mm,#22	S.N.A
..2	GBW-SC	3811-000480	WIRE-PVC CU;BCWA,1KV,ROLL,17/0.16mm,#22,	S.N.A
..2	GDW-GN	AA39-20009G	LEAD CONNECTOR-ASSY;-,YFH800-01,-,1P,700	
..2	GRW-GN	3811-000446	WIRE-PVC CU;TCWA,600V,ROLL,17/0.16mm,#22	S.N.A
..2	GRW-SC	3811-000480	WIRE-PVC CU;BCWA,1KV,ROLL,17/0.16mm,#22,	S.N.A
⚠ ..2	IC501	AA96-50151B	ASSY-H/S;-,AMP,AA61-10060A,TDA6111Q,-	
...3		1201-001131	IC-VIDEO AMP;6111,SIP,9P,-,SINGLE,-,PLAS	
...3		6001-000057	SCREW-MACHINE;RH,+,M3,L6,ZPC(BLK),SWRCH1	S.N.A
...3		6021-000222	NUT-HEXAGON;2C,M3,ZPC(YEL),SM20C 1	S.N.A
...3		AA61-10060A	BRACKET-TR;-,-,CUS-1 1/2H,T0.5,-,-,-	S.N.A
⚠ ..2	IC531	AA96-50151B	ASSY-H/S;-,AMP,AA61-10060A,TDA6111Q,-	
⚠ ..2	IC561	AA96-50151B	ASSY-H/S;-,AMP,AA61-10060A,TDA6111Q,-	
..2	PCB	AA41-10998C	PCB-CRT;P51A,1L,FR-1,330x245x1.6T,3A,M	S.N.A
..2	R506	2001-001088	R-CARBON(S);1KOHM,5%,1/2W,AA,TP,2.4X6.4M	
..2	RDW-GN	AA39-20009C	LEAD CONNECTOR-ASSY;-,YFH800-01,-,1P,400	
..2	SG502	AA27-00084A	COIL;S-23,-,-,-,-,-,-,-,S-23,5000Mohm	
..2	SG532	AA27-00084A	COIL;S-23,-,-,-,-,-,-,-,S-23,5000Mohm	
..2	SG562	AA27-00084A	COIL;S-23,-,-,-,-,-,-,-,S-23,5000Mohm	
⚠ ..2	V501	3704-001019	SOCKET-CRT;10P,29.1PI,35.5PI,AU30U	
⚠ ..2	V531	3704-001019	SOCKET-CRT;10P,29.1PI,35.5PI,AU30U	
⚠ ..2	V561	3704-001019	SOCKET-CRT;10P,29.1PI,35.5PI,AU30U	
..2	VR501	2101-000321	VR-ROTARY;1Mohm,-,0.6W,SIDE	
..2	VR531	2101-000321	VR-ROTARY;1Mohm,-,0.6W,SIDE	
..2	VR561	2101-000321	VR-ROTARY;1Mohm,-,0.6W,SIDE	
..2		AA99-20079J	ASSY-PCB SUB,AUTO; AA95-00129M ,V	S.N.A
...3	C502	2401-000027	C-AL;4.7uF,20%,50V,GP,TP,5x11,5	
...3	C503	2201-000119	C-CERAMIC,DISC;100nF,+80-20%,50V,Y5V,TP,	
...3	C504	2401-001537	C-AL;47uF,20%,25V,GP,TP,6.3x7mm,5mm	
...3	C505	2305-000149	C-FILM,MPEF;100nF,5%,100V,TP,12x12.5x6.5	
...3	C506	2401-000430	C-AL;10uF,20%,250V,GP,TP,10x16mm,5m	
...3	C507	2305-000154	C-FILM,MPEF;100nF,5%,400V,TP,21.5x6.5x11	
...3	C510	2401-000430	C-AL;10uF,20%,250V,GP,TP,10x16mm,5m	
...3	C512	2401-000133	C-AL;1000uF,20%,16V,GP,TP,10x20,5	
...3	C513	2201-000983	C-CERAMIC,DISC;1nF,10%,2kV,Y5P,TP,9x5,7.	
...3	C514	2201-000599	C-CERAMIC,DISC;0.56nF,10%,500V,Y5P,TP,5.	
...3	C532	2401-000027	C-AL;4.7uF,20%,50V,GP,TP,5x11,5	
...3	C533	2201-000119	C-CERAMIC,DISC;100nF,+80-20%,50V,Y5V,TP,	
...3	C534	2401-001537	C-AL;47uF,20%,25V,GP,TP,6.3x7mm,5mm	
...3	C535	2305-000149	C-FILM,MPEF;100nF,5%,100V,TP,12x12.5x6.5	
...3	C536	2401-000430	C-AL;10uF,20%,250V,GP,TP,10x16mm,5m	
...3	C537	2305-000154	C-FILM,MPEF;100nF,5%,400V,TP,21.5x6.5x11	
...3	C540	2401-000430	C-AL;10uF,20%,250V,GP,TP,10x16mm,5m	
...3	C542	2201-000983	C-CERAMIC,DISC;1nF,10%,2kV,Y5P,TP,9x5,7.	
...3	C543	2201-000599	C-CERAMIC,DISC;0.56nF,10%,500V,Y5P,TP,5.	
...3	C562	2401-000027	C-AL;4.7uF,20%,50V,GP,TP,5x11,5	
...3	C563	2201-000119	C-CERAMIC,DISC;100nF,+80-20%,50V,Y5V,TP,	
...3	C564	2401-001537	C-AL;47uF,20%,25V,GP,TP,6.3x7mm,5mm	
...3	C565	2305-000149	C-FILM,MPEF;100nF,5%,100V,TP,12x12.5x6.5	
...3	C566	2401-000430	C-AL;10uF,20%,250V,GP,TP,10x16mm,5m	
...3	C567	2305-000154	C-FILM,MPEF;100nF,5%,400V,TP,21.5x6.5x11	

Level	Loc. No.	Code No.	Description ; Specification	Remark
...3	C570	2401-000430	C-AL;10uF,20%,250V,GP,TP,10x16mm,5m	
...3	C572	2201-000983	C-CERAMIC,DISC;1nF,10%,2kV,Y5P,TP,9x5,7.	
...3	C573	2201-000599	C-CERAMIC,DISC;0.56nF,10%,500V,Y5P,TP,5.	
...3	CN401	3711-002645	CONNECTOR-HEADER;BOX,6P,1R,2.5MM,STRAIGH	
...3	D501	0402-000546	DIODE-RECTIFIER;TVR10G,400V,1.0A,DO-41,T	
...3	D502	0402-000546	DIODE-RECTIFIER;TVR10G,400V,1.0A,DO-41,T	
...3	D503	0402-000493	DIODE-RECTIFIER;1R5GU41,400V,1.5A,DO-15L	
...3	D504	0401-000005	DIODE-SWITCHING;1N4148,100V,200MA,DO-35,	
...3	D509	0401-000005	DIODE-SWITCHING;1N4148,100V,200MA,DO-35,	
...3	D510	0401-000005	DIODE-SWITCHING;1N4148,100V,200MA,DO-35,	
...3	D531	0402-000546	DIODE-RECTIFIER;TVR10G,400V,1.0A,DO-41,T	
...3	D532	0402-000546	DIODE-RECTIFIER;TVR10G,400V,1.0A,DO-41,T	
...3	D533	0402-000493	DIODE-RECTIFIER;1R5GU41,400V,1.5A,DO-15L	
...3	D561	0402-000546	DIODE-RECTIFIER;TVR10G,400V,1.0A,DO-41,T	
...3	D562	0402-000546	DIODE-RECTIFIER;TVR10G,400V,1.0A,DO-41,T	
...3	D563	0402-000493	DIODE-RECTIFIER;1R5GU41,400V,1.5A,DO-15L	
...3	DZ501	0403-001317	DIODE-ZENER;MTZJ3.0B,3.01-3.22V,500mW,DO	
...3	DZ502	0403-000508	DIODE-ZENER;MTZJ5.6B,5.6V,5.45-5.73V,500	
...3	DZ503	0403-000708	DIODE-ZENER;MTZJ13B,13V,12.55-13.21V,500	
...3	DZ531	0403-001317	DIODE-ZENER;MTZJ3.0B,3.01-3.22V,500mW,DO	
...3	DZ532	0403-000508	DIODE-ZENER;MTZJ5.6B,5.6V,5.45-5.73V,500	
...3	DZ533	0403-000708	DIODE-ZENER;MTZJ13B,13V,12.55-13.21V,500	
...3	DZ561	0403-001317	DIODE-ZENER;MTZJ3.0B,3.01-3.22V,500mW,DO	
...3	DZ562	0403-000508	DIODE-ZENER;MTZJ5.6B,5.6V,5.45-5.73V,500	
...3	DZ563	0403-000708	DIODE-ZENER;MTZJ13B,13V,12.55-13.21V,500	
...3	L501	2701-000114	INDUCTOR-AXIAL;10uH,10%,2.5x3.4mm	
...3	L531	2701-000114	INDUCTOR-AXIAL;10uH,10%,2.5x3.4mm	
...3	L561	2701-000114	INDUCTOR-AXIAL;10uH,10%,2.5x3.4mm	
...3	Q501	0502-000006	TR-POWER;KSC1507,NPN,15W,TO-220,TP,120-	
...3	Q502	0501-000389	TR-SMALL SIGNAL;KSC815,NPN,400mW,TO-92,T	
...3	Q531	0502-000006	TR-POWER;KSC1507,NPN,15W,TO-220,TP,120-	
...3	Q561	0502-000006	TR-POWER;KSC1507,NPN,15W,TO-220,TP,120-	
...3	R500	2001-000221	R-CARBON;1.2KOHM,5%,1/8W,AA,TP,1.8X3.2M	
...3	R502	2001-000429	R-CARBON;1KOHM,5%,1/8W,AA,TP,1.8X3.2MM	
...3	R503	2001-000429	R-CARBON;1KOHM,5%,1/8W,AA,TP,1.8X3.2MM	
...3	R507	2001-000429	R-CARBON;1KOHM,5%,1/8W,AA,TP,1.8X3.2MM	
...3	R508	2003-000706	R-METAL OXIDE(S);47Kohm,5%,2W,AA,TP,4.3x	
...3	R511	2001-000009	R-CARBON;20KOHM,5%,1/8W,AA,TP,1.8X3.2MM	
...3	R513	2008-000252	R-FUSIBLE(S);0.47ohm,10%,1/2W,AF,TP,2.5x	
...3	R514	2001-001122	R-CARBON(S);3.9KOHM,5%,1/2W,AA,TP,2.4X6.	
...3	R515	2002-001017	R-COMPOSITION;1Kohm,10%,1/2W,AA,TP,3.7x9	
...3	R516	2001-000009	R-CARBON;20KOHM,5%,1/8W,AA,TP,1.8X3.2MM	
...3	R517	2001-000085	R-CARBON(S);100KOHM,5%,1/2W,AA,TP,2.4X6.	
...3	R518	2002-001021	R-COMPOSITION;560KOHM,10%,1/2W,AA,TP,3.7	
...3	R519	2002-001021	R-COMPOSITION;560KOHM,10%,1/2W,AA,TP,3.7	
...3	R520	2001-000066	R-CARBON(S);10KOHM,5%,1/2W,AA,TP,2.4X6.4	
...3	R521	2001-001052	R-CARBON(S);1.5MOHM,5%,1/2W,AA,TP,2.4X6.	
...3	R522	2002-001006	R-COMPOSITION;4.7Kohm,5%,1/2W,AA,TP,3.7x	
...3	R523	2002-001006	R-COMPOSITION;4.7Kohm,5%,1/2W,AA,TP,3.7x	
...3	R524	2001-000028	R-CARBON(S);100OHM,5%,1/2W,AA,TP,2.4X6.4	
...3	R526	2001-000539	R-CARBON;24KOHM,5%,1/8W,AA,TP,1.8X3.2MM	
...3	R527	2001-000577	R-CARBON;2KOHM,5%,1/8W,AA,TP,1.8X3.2MM	
...3	R528	2001-001015	R-CARBON;9.1KOHM,5%,1/8W,AA,TP,1.8X3.2M	
...3	R529	2002-001021	R-COMPOSITION;560KOHM,10%,1/2W,AA,TP,3.7	
...3	R532	2001-000429	R-CARBON;1KOHM,5%,1/8W,AA,TP,1.8X3.2MM	
...3	R533	2001-000429	R-CARBON;1KOHM,5%,1/8W,AA,TP,1.8X3.2MM	
...3	R536	2001-001088	R-CARBON(S);1KOHM,5%,1/2W,AA,TP,2.4X6.4M	
...3	R537	2001-000429	R-CARBON;1KOHM,5%,1/8W,AA,TP,1.8X3.2MM	
...3	R538	2003-000706	R-METAL OXIDE(S);47Kohm,5%,2W,AA,TP,4.3x	
...3	R540	2001-001000	R-CARBON;82KOHM,5%,1/8W,AA,TP,1.8X3.2MM	
...3	R541	2001-000009	R-CARBON;20KOHM,5%,1/8W,AA,TP,1.8X3.2MM	
...3	R543	2008-000252	R-FUSIBLE(S);0.47ohm,10%,1/2W,AF,TP,2.5x	
...3	R544	2001-001122	R-CARBON(S);3.9KOHM,5%,1/2W,AA,TP,2.4X6.	
...3	R545	2002-001017	R-COMPOSITION;1Kohm,10%,1/2W,AA,TP,3.7x9	
...3	R546	2001-000009	R-CARBON;20KOHM,5%,1/8W,AA,TP,1.8X3.2MM	
...3	R547	2001-000085	R-CARBON(S);100KOHM,5%,1/2W,AA,TP,2.4X6.	
...3	R548	2002-001021	R-COMPOSITION;560KOHM,10%,1/2W,AA,TP,3.7	
...3	R549	2002-001021	R-COMPOSITION;560KOHM,10%,1/2W,AA,TP,3.7	
...3	R550	2001-000066	R-CARBON(S);10KOHM,5%,1/2W,AA,TP,2.4X6.4	
...3	R551	2001-001052	R-CARBON(S);1.5MOHM,5%,1/2W,AA,TP,2.4X6.	
...3	R552	2002-001006	R-COMPOSITION;4.7Kohm,5%,1/2W,AA,TP,3.7x	
...3	R553	2002-001006	R-COMPOSITION;4.7Kohm,5%,1/2W,AA,TP,3.7x	
...3	R554	2001-000028	R-CARBON(S);100OHM,5%,1/2W,AA,TP,2.4X6.4	
...3	R559	2002-001015	R-COMPOSITION;47Kohm,5%,1/2W,AA,TP,3.7x9	
...3	R562	2001-000221	R-CARBON;1.2KOHM,5%,1/8W,AA,TP,1.8X3.2M	
...3	R563	2001-000429	R-CARBON;1KOHM,5%,1/8W,AA,TP,1.8X3.2MM	
...3	R564	2001-000837	R-CARBON;51KOHM,5%,1/8W,AA,TP,1.8X3.2MM	
...3	R566	2001-001088	R-CARBON(S);1KOHM,5%,1/2W,AA,TP,2.4X6.4M	
...3	R567	2001-000429	R-CARBON;1KOHM,5%,1/8W,AA,TP,1.8X3.2MM	
...3	R571	2001-000281	R-CARBON;100OHM,5%,1/8W,AA,TP,1.8X3.2MM	
...3	R572	2003-000706	R-METAL OXIDE(S);47Kohm,5%,2W,AA,TP,4.3x	
...3	R573	2008-000252	R-FUSIBLE(S);0.47ohm,10%,1/2W,AF,TP,2.5x	
...3	R574	2001-001122	R-CARBON(S);3.9KOHM,5%,1/2W,AA,TP,2.4X6.	
...3	R575	2002-001017	R-COMPOSITION;1Kohm,10%,1/2W,AA,TP,3.7x9	
...3	R576	2001-000009	R-CARBON;20KOHM,5%,1/8W,AA,TP,1.8X3.2MM	
...3	R577	2001-000085	R-CARBON(S);100KOHM,5%,1/2W,AA,TP,2.4X6.	
...3	R578	2002-001021	R-COMPOSITION;560KOHM,10%,1/2W,AA,TP,3.7	
...3	R579	2002-001021	R-COMPOSITION;560KOHM,10%,1/2W,AA,TP,3.7	
...3	R580	2001-000066	R-CARBON(S);10KOHM,5%,1/2W,AA,TP,2.4X6.4	
...3	R581	2001-001052	R-CARBON(S);1.5MOHM,5%,1/2W,AA,TP,2.4X6.	
...3	R582	2002-001006	R-COMPOSITION;4.7Kohm,5%,1/2W,AA,TP,3.7x	
...3	R583	2002-001006	R-COMPOSITION;4.7Kohm,5%,1/2W,AA,TP,3.7x	
...3	R584	2001-000028	R-CARBON(S);100OHM,5%,1/2W,AA,TP,2.4X6.4	
...3	R589	2002-001015	R-COMPOSITION;47Kohm,5%,1/2W,AA,TP,3.7x9	
...3	SG351	4715-001036	SURGE ABSORBER;350V,20%,-,-,TP	
...3	SG501	4715-001036	SURGE ABSORBER;350V,20%,-,-,TP	
...3	SG503	4715-001036	SURGE ABSORBER;350V,20%,-,-,TP	
...3	SG533	4715-001036	SURGE ABSORBER;350V,20%,-,-,TP	
...3	SG561	4715-001036	SURGE ABSORBER;350V,20%,-,-,TP	
...3	SG563	4715-001036	SURGE ABSORBER;350V,20%,-,-,TP	
..2		AA63-10002A	BAND-TIE;-,NYLON66 V2,-,-,L100,NTR,-,-	S.N.A
..2		0202-000187	SOLDER-WIRE FLUX;-,RS60S,D1.2,63Sn/37Pb	S.N.A

ASSY-PCB,H/V

1	*	AA95-00056C	ASSY-PCB,H/V;-,SP43J5HP3S/XTT,J51A,-,-,-	
..2	BK01	AA61-10068A	BRACKET-PCB;-,M2160,SPTE,T0.3,-,-,-	S.N.A
..2	BK02	AA61-10068A	BRACKET-PCB;-,M2160,SPTE,T0.3,-,-,-	S.N.A
..2	BK03	AA61-10068A	BRACKET-PCB;-,M2160,SPTE,T0.3,-,-,-	S.N.A
..2	CN401	3711-001049	CONNECTOR-HEADER;BOX,6P,1R,2.5mm,ANGLE,-	
..2	CN402	3711-002709	CONNECTOR-HEADER;NOWALL,12P,1R,2.5MM,ANG	
..2	CN403	AA39-20052A	LEAD CONNECTOR-ASSY;-,YBNH025-04,YSH025-	
..2	CN404	3711-001283	CONNECTOR-HEADER;NOWALL,14P,1R,2.5mm,ANG	
⚠ ..2	IC471	1203-000610	IC-PWM CONTROLLER;494,DIP,16P,300MIL,PLA	
..2	L351	AA27-10003M	COIL-CHOKE;-,6100uH,J,40,34mA,TP,EL0607R	
..2	PCB	AA41-00199C	PCB-H/V MODULE;P53A,CEM-1,1L,C,1.6T,330x	S.N.A
..2	Q371	AA96-50291A	ASSY-H/S;-,-,AA62-30154B,2SC4636,-	
...3		0205-000129	GREASE-SILICON;SC102,JAPAN	S.N.A
...3		0502-000442	TR-POWER;2SC4636RB,NPN,2W,TO-220,ST,10-	
...3		6003-000333	SCREW-TAPTITE;RH,+,2S,M3,L10,ZPC(YEL),SW	S.N.A
...3		AA62-30154B	HEAT SINK-ES;-,A6063,EXTR,-,-,SILVER ANO	S.N.A
..2	Q422	0505-000156	FET-SILICON;IRF620,N,200V,5A,0.8ohm,50W,	S.N.A
..2	R425	2003-000736	R-METAL OXIDE(S);560ohm,5%,3W,AA,TP,6x16	
..2	R485	2008-001096	R-FUSIBLE(S);3.3OHM,5%,1/2W,AC,BK,2.5X6.	
..2		AA99-20071J	ASSY-PCB SUB,AUTO; AA95-00056C ,V	S.N.A
...3	C341	2401-001914	C-AL;1uF,20%,50V,BP,TP,5x11,5	
...3	C342	2401-000962	C-AL;22uF,20%,50V,GP,TP,5x11,5	
...3	C351	2301-000175	C-FILM,PEF;15nF,5%,50V,TP,7.1x3.5x13mm,5	
...3	C352	2401-000480	C-AL;10uF,20%,50V,GP,TP,5x11,5	
...3	C353	2301-000204	C-FILM,PEF;2.7nF,5%,50V,TP,7.4x3.9x13mm,	
...3	C354	2301-000261	C-FILM,PEF;4.7nF,5%,100V,TP,10.5x12.5x6.	
...3	C355	2401-000480	C-AL;10uF,20%,50V,GP,TP,5x11,5	
...3	C356	2201-000180	C-CERAMIC,DISC;10nF,10%,50V,Y5V,TP,7x3,5	
...3	C357	2401-001989	C-AL;4.7uF,20%,50V,BP,TP,5x11,5	
...3	C358	2401-000471	C-AL;10uF,20%,50V,BP,TP,5x11,5mm	
...3	C360	2305-000289	C-FILM,MPEF;220nF,5%,63V,TP,-,5mm	
...3	C361	2306-000122	C-FILM,MPPF;100nF,5%,50V,TP,7.3x4.0x5.0m	
...3	C362	2305-000149	C-FILM,MPEF;100nF,5%,100V,TP,12x12.5x6.5	
...3	C371	2401-000302	C-AL;100uF,20%,25V,GP,TP,6.3x11,5	
...3	C372	2401-000480	C-AL;10uF,20%,50V,GP,TP,5x11,5	
...3	C373	2401-000302	C-AL;100uF,20%,25V,GP,TP,6.3x11,5	
...3	C374	2401-001621	C-AL;6.8uF,20%,450V,GP,TP,13x20,5	
...3	C405	2201-000558	C-CERAMIC,DISC;0.47nF,10%,50V,Y5P,TP,5x3	
...3	C406	2201-000370	C-CERAMIC,DISC;0.22nF,10%,50V,Y5P,TP,4x3	
...3	C421	2401-000302	C-AL;100uF,20%,25V,GP,TP,6.3x11,5	
...3	C429	2305-000704	C-FILM,MPEF;100nF,5%,250V,TP,16.5x10.3x5	
...3	C454	2303-000331	C-FILM,PPF;4.7nF,5%,630V,TP,19.5x12x7,7.	
...3	C455	2401-001527	C-AL;47uF,20%,250V,HR,TP,13x25mm,5m	
...3	C456	2201-000132	C-CERAMIC,DISC;0.1nF,10%,500V,Y5P,TP,6.5	
...3	C461	2201-000600	C-CERAMIC,DISC;0.56nF,10%,50V,Y5P,TP,5x3	

Level	Loc. No.	Code No.	Description ; Specification	Remark
...3	C462	2301-000246	C-FILM,PEF;33nF,5%,100V,TP,7x5.0x9.5mm,5	
...3	C480	2306-000122	C-FILM,MPPF;100nF,5%,50V,TP,7.3x4.0x5.0m	
...3	C481	2401-000914	C-AL;22uF,20%,16V,GP,TP,5x11,5	
...3	C482	2305-000178	C-FILM,MPEF;10nF,5%,100V,TP,-,5mm	
...3	C484	2401-001026	C-AL;3.3UF,20%,50V,GP,TP,5X11,5	
...3	C485	2201-000146	C-CERAMIC,DISC;0.1nF,5%,50V,SL,TP,5x3.5,	
...3	C486	2201-000146	C-CERAMIC,DISC;0.1nF,5%,50V,SL,TP,5x3.5,	
...3	C487	2401-001026	C-AL;3.3UF,20%,50V,GP,TP,5X11,5	
...3	C488	2401-002144	C-AL;47uF,20%,16V,GP,TP,5x11,5	
...3	C489	2401-001840	C-AL;100uF,20%,16V,GP,TP,6.3x11,5	
...3	C490	2201-000119	C-CERAMIC,DISC;100nF,+80-20%,50V,Y5V,TP,	
...3	C492	2401-002144	C-AL;47uF,20%,16V,GP,TP,5x11,5	
...3	C493	2201-000119	C-CERAMIC,DISC;100nF,+80-20%,50V,Y5V,TP,	
...3	C494	2201-000471	C-CERAMIC,DISC;0.33nF,10%,50V,Y5P,TP,4x3	
...3	C495	2301-000192	C-FILM,PEF;1nF,5%,50V,TP,5.3x10mm,5mm	
...3	C496	2401-000832	C-AL;220uF,20%,25V,GP,TP,8x11.5,5	
...3	D342	0401-000005	DIODE-SWITCHING;1N4148,100V,200MA,DO-35,	
...3	D343	0401-000005	DIODE-SWITCHING;1N4148,100V,200MA,DO-35,	
...3	D344	0401-000005	DIODE-SWITCHING;1N4148,100V,200MA,DO-35,	
...3	D345	0403-001325	DIODE-ZENER;MTZJ15C,14.35-15.09V,500mW,D	
...3	D352	0401-000005	DIODE-SWITCHING;1N4148,100V,200MA,DO-35,	
...3	D353	0401-000005	DIODE-SWITCHING;1N4148,100V,200MA,DO-35,	
...3	D355	0402-000546	DIODE-RECTIFIER;TVR10G,400V,1.0A,DO-41,T	
...3	D363	0401-000005	DIODE-SWITCHING;1N4148,100V,200MA,DO-35,	
...3	D364	0401-000005	DIODE-SWITCHING;1N4148,100V,200MA,DO-35,	
...3	D371	0401-000005	DIODE-SWITCHING;1N4148,100V,200MA,DO-35,	
...3	D372	0401-000005	DIODE-SWITCHING;1N4148,100V,200MA,DO-35,	
...3	D373	0402-000243	DIODE-RECTIFIER;RC2-V1,2000V,0.2A,DO-201	
...3	D384	0402-000132	DIODE-RECTIFIER;1N4004,400V,1A,DO-41,TP	
...3	D385	0401-000005	DIODE-SWITCHING;1N4148,100V,200MA,DO-35,	
...3	D386	0403-001316	DIODE-ZENER;MTZJ3.0A,2.85-3.07V,500mW,DO	
...3	D395	0403-001319	DIODE-ZENER;MTZJ4.7C,4.68-4.93V,500mW,DO	
⚠ ...3	D442	0401-000005	DIODE-SWITCHING;1N4148,100V,200MA,DO-35,	
⚠ ...3	D443	0401-000005	DIODE-SWITCHING;1N4148,100V,200MA,DO-35,	
⚠ ...3	D451	0402-000534	DIODE-RECTIFIER;RG10V,400V,1.2A,DO-201,T	
⚠ ...3	D456	0401-000005	DIODE-SWITCHING;1N4148,100V,200MA,DO-35,	
⚠ ...3	D457	0403-000714	DIODE-ZENER;MTZJ3.3B,3.3V,3.32-3.53V,500	
⚠ ...3	D474	0403-000734	DIODE-ZENER;TZP15B,15V,14.7-16.5V,1W,DO-	
⚠ ...3	D475	0401-000005	DIODE-SWITCHING;1N4148,100V,200MA,DO-35,	
⚠ ...3	D476	0401-000005	DIODE-SWITCHING;1N4148,100V,200MA,DO-35,	
⚠ ...3	D477	0401-000005	DIODE-SWITCHING;1N4148,100V,200MA,DO-35,	
⚠ ...3	D478	0401-000005	DIODE-SWITCHING;1N4148,100V,200MA,DO-35,	
⚠ ...3	D479	0401-000005	DIODE-SWITCHING;1N4148,100V,200MA,DO-35,	
⚠ ...3	D480	0402-000132	DIODE-RECTIFIER;1N4004,400V,1A,DO-41,TP	
⚠ ...3	D483	0403-000720	DIODE-ZENER;MTZJ9.1B,9.1V,8.57-9.01V,500	
⚠ ...3	D484	0402-000132	DIODE-RECTIFIER;1N4004,400V,1A,DO-41,TP	
⚠ ...3	D491	0401-000005	DIODE-SWITCHING;1N4148,100V,200MA,DO-35,	
⚠ ...3	D492	0403-000716	DIODE-ZENER;MTZJ4.7B,4.7V,4.55-4.8V,500m	
⚠ ...3	D493	0403-001325	DIODE-ZENER;MTZJ15C,14.35-15.09V,500mW,D	
⚠ ...3	IC481	1203-001217	IC-POSI.ADJUST REG.;431,TO-92,3P,4.58MIL	
...3	L341	2701-000116	INDUCTOR-AXIAL;10uH,10%,4.2x9.8mm	
...3	Q342	0501-000389	TR-SMALL SIGNAL;KSC815,NPN,400mW,TO-92,T	
...3	Q343	0501-000389	TR-SMALL SIGNAL;KSC815,NPN,400mW,TO-92,T	
...3	Q344	0501-000283	TR-SMALL SIGNAL;KSA539,PNP,400mW,TO-92,T	
...3	Q350	0501-000389	TR-SMALL SIGNAL;KSC815,NPN,400mW,TO-92,T	
...3	Q351	0501-000283	TR-SMALL SIGNAL;KSA539,PNP,400mW,TO-92,T	
...3	Q352	0501-000389	TR-SMALL SIGNAL;KSC815,NPN,400mW,TO-92,T	
...3	Q353	0501-000389	TR-SMALL SIGNAL;KSC815,NPN,400mW,TO-92,T	
...3	Q354	0501-000283	TR-SMALL SIGNAL;KSA539,PNP,400mW,TO-92,T	
...3	Q355	0501-000366	TR-SMALL SIGNAL;KSC2330-Y,NPN,1W,TO-92L,	
...3	Q381	0501-000389	TR-SMALL SIGNAL;KSC815,NPN,400mW,TO-92,T	
...3	Q382	0501-000389	TR-SMALL SIGNAL;KSC815,NPN,400mW,TO-92,T	
⚠ ...3	Q401	0501-000389	TR-SMALL SIGNAL;KSC815,NPN,400mW,TO-92,T	
⚠ ...3	Q402	0501-000389	TR-SMALL SIGNAL;KSC815,NPN,400mW,TO-92,T	
⚠ ...3	Q421	0501-000389	TR-SMALL SIGNAL;KSC815,NPN,400mW,TO-92,T	
⚠ ...3	Q451	0501-000389	TR-SMALL SIGNAL;KSC815,NPN,400mW,TO-92,T	
⚠ ...3	Q452	0501-000389	TR-SMALL SIGNAL;KSC815,NPN,400mW,TO-92,T	
⚠ ...3	Q453	0501-000389	TR-SMALL SIGNAL;KSC815,NPN,400mW,TO-92,T	
⚠ ...3	Q454	0501-000283	TR-SMALL SIGNAL;KSA539,PNP,400mW,TO-92,T	
⚠ ...3	Q461	0501-000389	TR-SMALL SIGNAL;KSC815,NPN,400mW,TO-92,T	
⚠ ...3	Q471	0501-000389	TR-SMALL SIGNAL;KSC815,NPN,400mW,TO-92,T	
⚠ ...3	Q473	0501-000389	TR-SMALL SIGNAL;KSC815,NPN,400mW,TO-92,T	
⚠ ...3	Q481	0501-000389	TR-SMALL SIGNAL;KSC815,NPN,400mW,TO-92,T	
⚠ ...3	Q482	0501-000283	TR-SMALL SIGNAL;KSA539,PNP,400mW,TO-92,T	
⚠ ...3	Q483	0501-000283	TR-SMALL SIGNAL;KSA539,PNP,400mW,TO-92,T	
⚠ ...3	Q491	0501-000389	TR-SMALL SIGNAL;KSC815,NPN,400mW,TO-92,T	
...3	R339	2001-000613	R-CARBON;3.9KOHM,5%,1/8W,AA,TP,1.8X3.2M	
...3	R340	2001-000241	R-CARBON;1.5KOHM,5%,1/8W,AA,TP,1.8X3.2M	
...3	R341	2001-000429	R-CARBON;1KOHM,5%,1/8W,AA,TP,1.8X3.2MM	
...3	R342	2001-000273	R-CARBON;100KOHM,5%,1/8W,AA,TP,1.8X3.2M	
...3	R343	2001-000812	R-CARBON;5.6KOHM,5%,1/8W,AA,TP,1.8X3.2M	
...3	R344	2001-000890	R-CARBON;6.8KOHM,5%,1/8W,AA,TP,1.8X3.2M	
...3	R345	2001-001088	R-CARBON(S);1KOHM,5%,1/2W,AA,TP,2.4X6.4M	
...3	R345A	2001-000429	R-CARBON;1KOHM,5%,1/8W,AA,TP,1.8X3.2MM	
...3	R346	2001-000290	R-CARBON;10KOHM,5%,1/8W,AA,TP,1.8X3.2MM	
...3	R347	2001-001088	R-CARBON(S);1KOHM,5%,1/2W,AA,TP,2.4X6.4M	
...3	R348	2001-000591	R-CARBON;3.3KOHM,5%,1/8W,AA,TP,1.8X3.2M	
...3	R349	2001-000252	R-CARBON;1.6KOHM,5%,1/8W,AA,TP,1.8X3.2M	
...3	R351	2001-001178	R-CARBON(S);680OHM,5%,1/2W,AA,TP,2.4X6.4	
...3	R352	2001-000003	R-CARBON;330ohm,5%,1/8W,AA,TP,1.8x3.2mm	
...3	R353	2001-000890	R-CARBON;6.8KOHM,5%,1/8W,AA,TP,1.8X3.2M	
...3	R354	2001-000890	R-CARBON;6.8KOHM,5%,1/8W,AA,TP,1.8X3.2M	
...3	R355	2001-000006	R-CARBON;2.4KOHM,5%,1/8W,AA,TP,1.8X3.2M	
...3	R357	2001-000613	R-CARBON;3.9KOHM,5%,1/8W,AA,TP,1.8X3.2M	
...3	R358	2001-000008	R-CARBON;15KOHM,5%,1/8W,AA,TP,1.8X3.2MM	
...3	R359	2001-000766	R-CARBON;43KOHM,5%,1/8W,AA,TP,1.8X3.2MM	
...3	R360	2001-000857	R-CARBON;560OHM,5%,1/8W,AA,TP,1.8X3.2MM	
...3	R361	2001-001191	R-CARBON(S);820KOHM,5%,1/2W,AA,TP,2.4X6.	
...3	R362	2001-000660	R-CARBON;33KOHM,5%,1/8W,AA,TP,1.8X3.2MM	
...3	R363	2001-000723	R-CARBON;4.3KOHM,5%,1/8W,AA,TP,1.8X3.2M	
...3	R364	2001-000938	R-CARBON;68OHM,5%,1/8W,AA,TP,1.8X3.2MM	
...3	R365	2001-001120	R-CARBON(S);3.3OHM,5%,1/2W,AA,TP,2.4X6.4	
...3	R366	2001-000109	R-CARBON(S);470OHM,5%,1/2W,AA,TP,2.4X6.4	
...3	R367	2001-001065	R-CARBON(S);110KOHM,5%,1/2W,AA,TP,2.4X6.	
...3	R368	2001-001065	R-CARBON(S);110KOHM,5%,1/2W,AA,TP,2.4X6.	
...3	R369	2001-001065	R-CARBON(S);110KOHM,5%,1/2W,AA,TP,2.4X6.	
...3	R369A	2001-001065	R-CARBON(S);110KOHM,5%,1/2W,AA,TP,2.4X6.	
...3	R370	2001-001065	R-CARBON(S);110KOHM,5%,1/2W,AA,TP,2.4X6.	
...3	R371	2001-001065	R-CARBON(S);110KOHM,5%,1/2W,AA,TP,2.4X6.	
...3	R372	2001-001110	R-CARBON(S);240KOHM,5%,1/2W,AA,TP,2.4X6.	
...3	R373	2001-001110	R-CARBON(S);240KOHM,5%,1/2W,AA,TP,2.4X6.	
...3	R374	2001-001110	R-CARBON(S);240KOHM,5%,1/2W,AA,TP,2.4X6.	
...3	R375	2001-001113	R-CARBON(S);270KOHM,5%,1/2W,AA,TP,2.4X6.	
...3	R376	2001-000613	R-CARBON;3.9KOHM,5%,1/8W,AA,TP,1.8X3.2M	
...3	R377	2004-001892	R-METAL(S);162Kohm,1%,1/2W,AA,TP,2.5x6.5	
...3	R378	2004-001892	R-METAL(S);162Kohm,1%,1/2W,AA,TP,2.5x6.5	
...3	R379	2004-001892	R-METAL(S);162Kohm,1%,1/2W,AA,TP,2.5x6.5	
...3	R380	2004-001892	R-METAL(S);162Kohm,1%,1/2W,AA,TP,2.5x6.5	
...3	R381	2001-001088	R-CARBON(S);1KOHM,5%,1/2W,AA,TP,2.4X6.4M	
...3	R384	2001-001150	R-CARBON(S);470KOHM,5%,1/2W,AA,TP,2.4X6.	
...3	R385	2001-000577	R-CARBON;2KOHM,5%,1/8W,AA,TP,1.8X3.2MM	
...3	R386	2001-000786	R-CARBON;47KOHM,5%,1/8W,AA,TP,1.8X3.2MM	
...3	R387	2001-000009	R-CARBON;20KOHM,5%,1/8W,AA,TP,1.8X3.2MM	
...3	R388	2001-000522	R-CARBON;22KOHM,5%,1/8W,AA,TP,1.8X3.2MM	
...3	R389	2001-000577	R-CARBON;2KOHM,5%,1/8W,AA,TP,1.8X3.2MM	
...3	R395	2001-000734	R-CARBON;4.7KOHM,5%,1/8W,AA,TP,1.8X3.2M	
...3	R397	2001-000429	R-CARBON;1KOHM,5%,1/8W,AA,TP,1.8X3.2MM	
...3	R411	2001-000734	R-CARBON;4.7KOHM,5%,1/8W,AA,TP,1.8X3.2M	
...3	R412	2001-001088	R-CARBON(S);1KOHM,5%,1/2W,AA,TP,2.4X6.4M	
...3	R413	2001-000515	R-CARBON;220OHM,5%,1/8W,AA,TP,1.8X3.2MM	
...3	R414	2001-000290	R-CARBON;10KOHM,5%,1/8W,AA,TP,1.8X3.2MM	
...3	R415	2001-000734	R-CARBON;4.7KOHM,5%,1/8W,AA,TP,1.8X3.2M	
...3	R416	2001-000006	R-CARBON;2.4KOHM,5%,1/8W,AA,TP,1.8X3.2M	
...3	R420	2001-000281	R-CARBON;100OHM,5%,1/8W,AA,TP,1.8X3.2MM	
...3	R421	2003-002159	R-METAL OXIDE;150OHM,5%,1W,AG,TP,4.3X12M	
...3	R422	2001-000028	R-CARBON(S);100OHM,5%,1/2W,AA,TP,2.4X6.4	
...3	R423	2001-000613	R-CARBON;3.9KOHM,5%,1/8W,AA,TP,1.8X3.2M	
...3	R437	2008-001087	R-FUSIBLE(S);1.8ohm,5%,2W,AG,TP,3.9x12mm	
...3	R438	2001-000085	R-CARBON(S);100KOHM,5%,1/2W,AA,TP,2.4X6.	
...3	R439	2001-000085	R-CARBON(S);100KOHM,5%,1/2W,AA,TP,2.4X6.	
...3	R442	2008-000254	R-FUSIBLE(S);0.68ohm,5%,2W,AF,TP,3.9x10m	
...3	R442A	2008-000254	R-FUSIBLE(S);0.68ohm,5%,2W,AF,TP,3.9x10m	
...3	R443	2003-002156	R-METAL OXIDE;560OHM,5%,2W,AG,TP,6X16MM	
...3	R443A	2003-002156	R-METAL OXIDE;560OHM,5%,2W,AG,TP,6X16MM	
...3	R445	2001-000258	R-CARBON;1.8KOHM,5%,1/8W,AA,TP,1.8X3.2M	
...3	R446	2001-000522	R-CARBON;22KOHM,5%,1/8W,AA,TP,1.8X3.2MM	
...3	R447	2001-000812	R-CARBON;5.6KOHM,5%,1/8W,AA,TP,1.8X3.2M	
...3	R448	2001-000411	R-CARBON;18KOHM,5%,1/8W,AA,TP,1.8X3.2MM	
...3	R449	2001-000660	R-CARBON;33KOHM,5%,1/8W,AA,TP,1.8X3.2MM	
...3	R450	2001-000290	R-CARBON;10KOHM,5%,1/8W,AA,TP,1.8X3.2MM	
...3	R451	2001-000812	R-CARBON;5.6KOHM,5%,1/8W,AA,TP,1.8X3.2M	
...3	R452	2001-000241	R-CARBON;1.5KOHM,5%,1/8W,AA,TP,1.8X3.2M	
...3	R454	2001-000761	R-CARBON;430OHM,5%,1/8W,AA,TP,1.8X3.2MM	
...3	R455	2001-000761	R-CARBON;430OHM,5%,1/8W,AA,TP,1.8X3.2MM	

Level	Loc. No.	Code No.	Description ; Specification	Remark
...3	R456	2001-000761	R-CARBON;430OHM,5%,1/8W,AA,TP,1.8X3.2MM	
...3	R458	2001-000577	R-CARBON;2KOHM,5%,1/8W,AA,TP,1.8X3.2MM	
...3	R459	2001-001192	R-CARBON(S);820OHM,5%,1/2W,AA,TP,2.4X6.4	
...3	R460	2003-002044	R-METAL OXIDE(S);100ohm,5%,1W,AF,TP,2.5x	
...3	R461	2001-000613	R-CARBON;3.9KOHM,5%,1/8W,AA,TP,1.8X3.2M	
...3	R464	2001-000734	R-CARBON;4.7KOHM,5%,1/8W,AA,TP,1.8X3.2M	
...3	R471	2001-001146	R-CARBON(S);4.7OHM,5%,1/2W,AA,TP,2.4X6.4	
...3	R472	2001-000800	R-CARBON;5.1KOHM,5%,1/8W,AA,TP,1.8X3.2M	
...3	R473	2001-000800	R-CARBON;5.1KOHM,5%,1/8W,AA,TP,1.8X3.2M	
...3	R474	2001-000009	R-CARBON;20KOHM,5%,1/8W,AA,TP,1.8X3.2MM	
...3	R474A	2001-000508	R-CARBON;220KOHM,5%,1/8W,AA,TP,1.8X3.2M	
...3	R475	2004-001023	R-METAL;5.6Kohm,1%,1/8W,AA,TP,1.8x3.2m	
...3	R475B	2001-000734	R-CARBON;4.7KOHM,5%,1/8W,AA,TP,1.8X3.2M	
...3	R477	2001-000429	R-CARBON;1KOHM,5%,1/8W,AA,TP,1.8X3.2MM	
...3	R479	2001-000005	R-CARBON;390ohm,5%,1/8W,AA,TP,1.8x3.2mm	
...3	R480	2001-000449	R-CARBON;2.2KOHM,5%,1/8W,AA,TP,1.8X3.2M	
...3	R481	2001-000290	R-CARBON;10KOHM,5%,1/8W,AA,TP,1.8X3.2MM	
...3	R482	2001-001031	R-CARBON;91KOHM,5%,1/8W,AA,TP,1.8X3.2MM	
...3	R483	2001-000429	R-CARBON;1KOHM,5%,1/8W,AA,TP,1.8X3.2MM	
...3	R484	2001-000429	R-CARBON;1KOHM,5%,1/8W,AA,TP,1.8X3.2MM	
...3	R487	2001-000924	R-CARBON;680OHM,5%,1/8W,AA,TP,1.8X3.2MM	
...3	R489	2001-000522	R-CARBON;22KOHM,5%,1/8W,AA,TP,1.8X3.2MM	
...3	R490	2001-000723	R-CARBON;4.3KOHM,5%,1/8W,AA,TP,1.8X3.2M	
...3	R491	2001-001178	R-CARBON(S);680OHM,5%,1/2W,AA,TP,2.4X6.4	
...3	R492	2001-000591	R-CARBON;3.3KOHM,5%,1/8W,AA,TP,1.8X3.2M	
...3	R493	2001-000429	R-CARBON;1KOHM,5%,1/8W,AA,TP,1.8X3.2MM	
...3	R494	2001-000066	R-CARBON(S);10KOHM,5%,1/2W,AA,TP,2.4X6.4	
...3	R495	2001-000037	R-CARBON(S);330OHM,5%,1/2W,AA,TP,2.4X6.4	
...3	R496	2001-000347	R-CARBON;13KOHM,5%,1/8W,AA,TP,1.8X3.2MM	
...3	R497	2001-000003	R-CARBON;330ohm,5%,1/8W,AA,TP,1.8x3.2mm	
...3	R498	2001-001070	R-CARBON(S);120OHM,5%,1/2W,AA,TP,2.4X6.4	
..2		2001-000262	R-CARBON;1.8MOHM,5%,1/8W,AA,TP,1.8X3.2M	
..2		0202-000187	SOLDER-WIRE FLUX;-,RS60S,D1.2,63Sn/37Pb	S.N.A
..2		AA65-30105C	CLAMP-WIRE;ALL MODEL,NYLON 66,V2,NTR,5MM	S.N.A

ASSY-PCB,CONV AMP

1	*	AA95-00055L	ASSY-PCB,CONV AMP;-,SP53J5HF,J51A,-,-,-	
..2	C491	2306-000322	C-FILM,MPPF;12nF,5%,1.6KV,TP,29x20.5x13,	
..2	CN203	AA39-00115A	LEAD CONNECTOR-ASSY;,-,-,10P,-,-,-,YBNH2	
..2	CN401	AA39-00128A	LEAD CONNECTOR-ASSY;,-,-,8P,-,-,-,YBNH25	
..2	CN402	AA39-00116A	LEAD CONNECTOR-ASSY;,-,-,12P,-,-,-,YBNH2	
..2	CN802	AA39-00128A	LEAD CONNECTOR-ASSY;,-,-,8P,-,-,-,YBNH25	
⚠ ..2	ICZ101	AA96-50152C	ASSY-H/S;-,TR,AA62-30012A,KA7806A,30MM	
...3		1203-000284	IC-POSI.FIXED REG.;7806,TO-220,3P,-,PLAS	
...3		6003-000333	SCREW-TAPTITE;RH,+,2S,M3,L10,ZPC(YEL),SW	S.N.A
...3		AA62-30012A	HEAT SINK-ES;-,A6063 EXTR,-,-,T0220,-,-,	S.N.A
⚠ ..2	ICZ102	1203-000121	IC-NEGA.FIXED REG.;7906,TO-220,3P,-,PLAS	
⚠ ..2	ICZ103	AA96-00034A	ASSY-H/S;-,CONVERGENCE,AA62-30173D,STK3	
...3		0205-000129	GREASE-SILICON;SC102,JAPAN	S.N.A
...3		1201-001225	IC-VIDEO AMP;392,SIP,22P,-,THREE,-,PLAST	
...3		6003-001021	SCREW-TAPTITE;RH,+,B,M3,L15,ZPC(YEL),SWR	S.N.A
...3		AA62-30173D	HEAT SINK-ES;-,-,T1.0,WHITE,SCREW-HOLE(2	S.N.A
⚠ ..2	ICZ104	AA96-00034A	ASSY-H/S;-,CONVERGENCE,AA62-30173D,STK3	
..2	PCB	AA41-00135D	PCB-CONVERGENCE AMP;P51A,1L,CEM-1,330x24	S.N.A
..2	SG303	4715-001050	SURGE ABSORBER;2.4kV,20%,1500A,-,DISC-RA	
..2	VR472	2103-001086	VR-SEMI;100KOHM,25%,0.3W,TOP	
..2		0202-000187	SOLDER-WIRE FLUX;-,RS60S,D1.2,63Sn/37Pb	S.N.A
..2		AA99-20071E	ASSY-PCB SUB,AUTO; AA95-00055L ,V	S.N.A
...3	CN403	3711-002643	CONNECTOR-HEADER;BOX,4P,1R,2.5MM,STRAIGH	
...3	CZ101	2401-001429	C-AL;470uF,20%,50V,GP,TP,13x20,5	
...3	CZ102	2401-001429	C-AL;470uF,20%,50V,GP,TP,13x20,5	
...3	CZ103	2401-000689	C-AL;2200uF,20%,16V,GP,TP,13x25,5	
...3	CZ105	2401-000689	C-AL;2200uF,20%,16V,GP,TP,13x25,5	
...3	CZ106	2201-000180	C-CERAMIC,DISC;10nF,10%,50V,Y5V,TP,7x3,5	
...3	CZ107	2201-000180	C-CERAMIC,DISC;10nF,10%,50V,Y5V,TP,7x3,5	
...3	CZ108	2201-000499	C-CERAMIC,DISC;0.39nF,5%,50V,SL,TP,8.5x3	
...3	CZ109	2201-000499	C-CERAMIC,DISC;0.39nF,5%,50V,SL,TP,8.5x3	
...3	CZ110	2201-000499	C-CERAMIC,DISC;0.39nF,5%,50V,SL,TP,8.5x3	
...3	CZ111	2201-000976	C-CERAMIC,DISC;0.022nF,5%,50V,NP0,TP,5x3	
...3	CZ112	2201-000863	C-CERAMIC,DISC;0.68nF,10%,50V,Y5P,TP,5x3	
...3	CZ113	2201-000976	C-CERAMIC,DISC;0.022nF,5%,50V,NP0,TP,5x3	
...3	CZ114	2201-000863	C-CERAMIC,DISC;0.68nF,10%,50V,Y5P,TP,5x3	
...3	CZ115	2201-000976	C-CERAMIC,DISC;0.022nF,5%,50V,NP0,TP,5x3	
...3	CZ116	2201-000863	C-CERAMIC,DISC;0.68nF,10%,50V,Y5P,TP,5x3	
...3	CZ117	2201-000327	C-CERAMIC,DISC;2.2nF,10%,50V,Y5V,TP,6.5x	
...3	CZ118	2201-000327	C-CERAMIC,DISC;2.2nF,10%,50V,Y5V,TP,6.5x	
...3	CZ119	2201-000119	C-CERAMIC,DISC;100nF,+80-20%,50V,Y5V,TP,	
...3	CZ120	2201-000119	C-CERAMIC,DISC;100nF,+80-20%,50V,Y5V,TP,	
...3	CZ121	2201-000764	C-CERAMIC,DISC;0.082nF,5%,50V,NP0,TP,8x3	
...3	CZ126	2201-000499	C-CERAMIC,DISC;0.39nF,5%,50V,SL,TP,8.5x3	
...3	CZ127	2201-000499	C-CERAMIC,DISC;0.39nF,5%,50V,SL,TP,8.5x3	
...3	CZ128	2201-000499	C-CERAMIC,DISC;0.39nF,5%,50V,SL,TP,8.5x3	
...3	CZ132	2201-000976	C-CERAMIC,DISC;0.022nF,5%,50V,NP0,TP,5x3	
...3	CZ133	2201-000863	C-CERAMIC,DISC;0.68nF,10%,50V,Y5P,TP,5x3	
...3	CZ134	2201-000976	C-CERAMIC,DISC;0.022nF,5%,50V,NP0,TP,5x3	
...3	CZ135	2201-000863	C-CERAMIC,DISC;0.68nF,10%,50V,Y5P,TP,5x3	
...3	CZ136	2201-000976	C-CERAMIC,DISC;0.022nF,5%,50V,NP0,TP,5x3	
...3	CZ137	2201-000863	C-CERAMIC,DISC;0.68nF,10%,50V,Y5P,TP,5x3	
...3	CZ138	2201-000327	C-CERAMIC,DISC;2.2nF,10%,50V,Y5V,TP,6.5x	
...3	CZ139	2201-000327	C-CERAMIC,DISC;2.2nF,10%,50V,Y5V,TP,6.5x	
...3	CZ144	2401-001840	C-AL;100uF,20%,16V,GP,TP,6.3x11,5	
...3	CZ145	2201-000119	C-CERAMIC,DISC;100nF,+80-20%,50V,Y5V,TP,	
...3	CZ146	2401-001840	C-AL;100uF,20%,16V,GP,TP,6.3x11,5	
...3	CZ147	2201-000119	C-CERAMIC,DISC;100nF,+80-20%,50V,Y5V,TP,	
...3	CZ151	2202-000796	C-CERAMIC,MLC-AXIAL;1NF,10%,50V,Y5P,TP,3	
...3	CZ152	2202-000796	C-CERAMIC,MLC-AXIAL;1NF,10%,50V,Y5P,TP,3	
...3	CZ153	2202-000796	C-CERAMIC,MLC-AXIAL;1NF,10%,50V,Y5P,TP,3	
...3	CZ154	2202-000796	C-CERAMIC,MLC-AXIAL;1NF,10%,50V,Y5P,TP,3	
...3	CZ155	2202-000796	C-CERAMIC,MLC-AXIAL;1NF,10%,50V,Y5P,TP,3	
...3	CZ156	2202-000796	C-CERAMIC,MLC-AXIAL;1NF,10%,50V,Y5P,TP,3	
...3	D453	0402-001286	DIODE-RECTIFIER;RP1H,2000V,.1A,-,TP	
...3	D501	0401-000005	DIODE-SWITCHING;1N4148,100V,200MA,DO-35,	
...3	DZ120	0403-000510	DIODE-ZENER;MTZJ6.2B,6.2V,5.96-6.27V,500	
...3	DZ121	0403-000510	DIODE-ZENER;MTZJ6.2B,6.2V,5.96-6.27V,500	
...3	DZ122	0403-000510	DIODE-ZENER;MTZJ6.2B,6.2V,5.96-6.27V,500	
...3	DZ126	0402-000546	DIODE-RECTIFIER;TVR10G,400V,1.0A,DO-41,T	
...3	DZ127	0402-000546	DIODE-RECTIFIER;TVR10G,400V,1.0A,DO-41,T	
...3	DZ128	0403-000510	DIODE-ZENER;MTZJ6.2B,6.2V,5.96-6.27V,500	
...3	DZ129	0403-000510	DIODE-ZENER;MTZJ6.2B,6.2V,5.96-6.27V,500	
...3	DZ130	0403-000510	DIODE-ZENER;MTZJ6.2B,6.2V,5.96-6.27V,500	
...3	DZ131	0403-000510	DIODE-ZENER;MTZJ6.2B,6.2V,5.96-6.27V,500	
...3	LZ101	2701-001030	INDUCTOR-AXIAL;43uH,10%,5x14mm	
...3	LZ102	2701-001030	INDUCTOR-AXIAL;43uH,10%,5x14mm	
...3	LZ103	2701-000142	INDUCTOR-AXIAL;1uH,10%,2.5x3.4mm	
...3	LZ104	2701-000142	INDUCTOR-AXIAL;1uH,10%,2.5x3.4mm	
...3	LZ107	2701-000142	INDUCTOR-AXIAL;1uH,10%,2.5x3.4mm	
...3	LZ108	2701-000142	INDUCTOR-AXIAL;1uH,10%,2.5x3.4mm	
...3	LZ109	2701-000142	INDUCTOR-AXIAL;1uH,10%,2.5x3.4mm	
...3	LZ110	2701-000142	INDUCTOR-AXIAL;1uH,10%,2.5x3.4mm	
...3	LZ111	2701-000142	INDUCTOR-AXIAL;1uH,10%,2.5x3.4mm	
...3	LZ112	2701-000142	INDUCTOR-AXIAL;1uH,10%,2.5x3.4mm	
...3	R382	2002-001006	R-COMPOSITION;4.7Kohm,5%,1/2W,AA,TP,3.7x	
...3	R476	2004-004046	R-METAL(S);430Kohm,1%,1/2W,AA,TP,2.5x6.5	
...3	R476A	2004-004001	R-METAL(S);180Kohm,1%,1/2W,AA,TP,2.5x6.5	
...3	R476B	2004-001892	R-METAL(S);162Kohm,1%,1/2W,AA,TP,2.5x6.5	
...3	R476C	2004-004046	R-METAL(S);430Kohm,1%,1/2W,AA,TP,2.5x6.5	
...3	R478	2004-001892	R-METAL(S);162Kohm,1%,1/2W,AA,TP,2.5x6.5	
...3	R501	2004-001376	R-METAL(S);11Kohm,1%,1/2W,AA,TP,2.4x6.4m	
...3	R502	2004-004366	R-METAL(S);1.3Kohm,1%,1/2W,AA,TP,2.5x6.5	
...3	RFZ19	2008-000261	R-FUSIBLE(S);150ohm,5%,1W,AF,TP,3.9x10mm	
...3	RFZ20	2008-000261	R-FUSIBLE(S);150ohm,5%,1W,AF,TP,3.9x10mm	
...3	RFZ21	2008-000261	R-FUSIBLE(S);150ohm,5%,1W,AF,TP,3.9x10mm	
...3	RFZ22	2008-000261	R-FUSIBLE(S);150ohm,5%,1W,AF,TP,3.9x10mm	
...3	RFZ50	2008-000261	R-FUSIBLE(S);150ohm,5%,1W,AF,TP,3.9x10mm	
...3	RFZ51	2008-000261	R-FUSIBLE(S);150ohm,5%,1W,AF,TP,3.9x10mm	
...3	RFZ52	2008-000261	R-FUSIBLE(S);150ohm,5%,1W,AF,TP,3.9x10mm	
...3	RFZ53	2008-000261	R-FUSIBLE(S);150ohm,5%,1W,AF,TP,3.9x10mm	
...3	RZ101	2001-000429	R-CARBON;1KOHM,5%,1/8W,AA,TP,1.8X3.2MM	
...3	RZ102	2001-000429	R-CARBON;1KOHM,5%,1/8W,AA,TP,1.8X3.2MM	
...3	RZ103	2001-000429	R-CARBON;1KOHM,5%,1/8W,AA,TP,1.8X3.2MM	
...3	RZ104	2001-001114	R-CARBON(S);270OHM,5%,1/2W,AA,TP,2.4X6.4	
...3	RZ105	2001-001114	R-CARBON(S);270OHM,5%,1/2W,AA,TP,2.4X6.4	
...3	RZ106	2001-001114	R-CARBON(S);270OHM,5%,1/2W,AA,TP,2.4X6.4	
...3	RZ107	2001-001114	R-CARBON(S);270OHM,5%,1/2W,AA,TP,2.4X6.4	
...3	RZ108	2001-001114	R-CARBON(S);270OHM,5%,1/2W,AA,TP,2.4X6.4	
...3	RZ109	2001-001114	R-CARBON(S);270OHM,5%,1/2W,AA,TP,2.4X6.4	
...3	RZ110	2001-000563	R-CARBON;27KOHM,5%,1/8W,AA,TP,1.8X3.2MM	
...3	RZ111	2001-000563	R-CARBON;27KOHM,5%,1/8W,AA,TP,1.8X3.2MM	
...3	RZ112	2001-000563	R-CARBON;27KOHM,5%,1/8W,AA,TP,1.8X3.2MM	

Level	Loc. No.	Code No.	Description ; Specification	Remark
...3	RZ113	2001-000591	R-CARBON;3.3KOHM,5%,1/8W,AA,TP,1.8X3.2M	
...3	RZ114	2001-000857	R-CARBON;560OHM,5%,1/8W,AA,TP,1.8X3.2MM	
...3	RZ115	2001-000591	R-CARBON;3.3KOHM,5%,1/8W,AA,TP,1.8X3.2M	
...3	RZ116	2001-000857	R-CARBON;560OHM,5%,1/8W,AA,TP,1.8X3.2MM	
...3	RZ117	2001-000591	R-CARBON;3.3KOHM,5%,1/8W,AA,TP,1.8X3.2M	
...3	RZ118	2001-000857	R-CARBON;560OHM,5%,1/8W,AA,TP,1.8X3.2MM	
...3	RZ120	2001-000281	R-CARBON;100OHM,5%,1/8W,AA,TP,1.8X3.2MM	
...3	RZ121	2001-000281	R-CARBON;100OHM,5%,1/8W,AA,TP,1.8X3.2MM	
...3	RZ122	2001-000003	R-CARBON;330ohm,5%,1/8W,AA,TP,1.8x3.2mm	
...3	RZ123	2003-002148	R-METAL OXIDE;3.9OHM,2%,2W,AF,TP,3.9X10M	
...3	RZ124	2003-002148	R-METAL OXIDE;3.9OHM,2%,2W,AF,TP,3.9X10M	
...3	RZ125	2003-002148	R-METAL OXIDE;3.9OHM,2%,2W,AF,TP,3.9X10M	
...3	RZ126	2003-002148	R-METAL OXIDE;3.9OHM,2%,2W,AF,TP,3.9X10M	
...3	RZ127	2003-002148	R-METAL OXIDE;3.9OHM,2%,2W,AF,TP,3.9X10M	
...3	RZ128	2003-002148	R-METAL OXIDE;3.9OHM,2%,2W,AF,TP,3.9X10M	
...3	RZ129	2003-001024	R-METAL OXIDE(S);150ohm,5%,2W,AF,TP,3.9x	
...3	RZ129A	2003-001024	R-METAL OXIDE(S);150ohm,5%,2W,AF,TP,3.9x	
...3	RZ130	2003-001024	R-METAL OXIDE(S);150ohm,5%,2W,AF,TP,3.9x	
...3	RZ130A	2003-001024	R-METAL OXIDE(S);150ohm,5%,2W,AF,TP,3.9x	
...3	RZ131	2003-002157	R-METAL OXIDE;220OHM,5%,2W,AG,TP,6X16MM	
...3	RZ131A	2003-002157	R-METAL OXIDE;220OHM,5%,2W,AG,TP,6X16MM	
...3	RZ132	2003-002157	R-METAL OXIDE;220OHM,5%,2W,AG,TP,6X16MM	
...3	RZ132A	2003-002157	R-METAL OXIDE;220OHM,5%,2W,AG,TP,6X16MM	
...3	RZ133	2001-000563	R-CARBON;27KOHM,5%,1/8W,AA,TP,1.8X3.2MM	
...3	RZ134	2001-000563	R-CARBON;27KOHM,5%,1/8W,AA,TP,1.8X3.2MM	
...3	RZ135	2001-000563	R-CARBON;27KOHM,5%,1/8W,AA,TP,1.8X3.2MM	
...3	RZ136	2001-000591	R-CARBON;3.3KOHM,5%,1/8W,AA,TP,1.8X3.2M	
...3	RZ137	2001-000857	R-CARBON;560OHM,5%,1/8W,AA,TP,1.8X3.2MM	
...3	RZ138	2001-000591	R-CARBON;3.3KOHM,5%,1/8W,AA,TP,1.8X3.2M	
...3	RZ139	2001-000857	R-CARBON;560OHM,5%,1/8W,AA,TP,1.8X3.2MM	
...3	RZ140	2001-000591	R-CARBON;3.3KOHM,5%,1/8W,AA,TP,1.8X3.2M	
...3	RZ141	2001-000857	R-CARBON;560OHM,5%,1/8W,AA,TP,1.8X3.2MM	
...3	RZ142	2003-002148	R-METAL OXIDE;3.9OHM,2%,2W,AF,TP,3.9X10M	
...3	RZ143	2003-002148	R-METAL OXIDE;3.9OHM,2%,2W,AF,TP,3.9X10M	
...3	RZ144	2003-002148	R-METAL OXIDE;3.9OHM,2%,2W,AF,TP,3.9X10M	
...3	RZ145	2003-002148	R-METAL OXIDE;3.9OHM,2%,2W,AF,TP,3.9X10M	
...3	RZ146	2003-002148	R-METAL OXIDE;3.9OHM,2%,2W,AF,TP,3.9X10M	
...3	RZ147	2003-002148	R-METAL OXIDE;3.9OHM,2%,2W,AF,TP,3.9X10M	
...3	RZ148	2003-002157	R-METAL OXIDE;220OHM,5%,2W,AG,TP,6X16MM	
...3	RZ148A	2003-002157	R-METAL OXIDE;220OHM,5%,2W,AG,TP,6X16MM	
...3	RZ149	2003-001024	R-METAL OXIDE(S);150ohm,5%,2W,AF,TP,3.9x	
...3	RZ149A	2003-001024	R-METAL OXIDE(S);150ohm,5%,2W,AF,TP,3.9x	

ASSY-DOOR,BODY

1	*	AA95-00575A	ASSY-DOOR,BODY;-,SP53J5HFX/MVT,J51A,-,-,	
..2	AV+DB	6006-001095	SCREW-ASS'Y TAPT;WP,BH,+,M4,L12,ZPC(YEL)	S.N.A
..2	CP+DB	6002-000512	SCREW-TAPPING;RH,+,2,M4,L12,ZPC(BLK),SWR	S.N.A
..2	PC+BM	6003-001023	SCREW-TAPTITE;RWH,+,B,M3,L10,ZPC(YEL),SW	S.N.A
..2		AA91-00157P	ASSY-DOOR,BODY;-,HB,J51A PAL,SP43J5HF	
...3	KC+DB	6002-000512	SCREW-TAPPING;RH,+,2,M4,L12,ZPC(BLK),SWR	S.N.A
...3	KNOPOW	AA61-60005A	SPRING-CS;-,SUS304,0.6,OD10.7,H10,N4,-,-	
...3	WR+DB	6002-000512	SCREW-TAPPING;RH,+,2,M4,L12,ZPC(BLK),SWR	S.N.A
...3		AA64-00290B	WINDOW-REMOCON;-,PCJ533R,SV-704P,PC,-,VI	S.N.A
...3		AA64-00294B	DOOR-CONTROL;-,PCJ533R,GR-806P,ABS,HB,GR	
...3		AA64-00295H	DOOR-BODY;-,53J5HF,GR-806P P51A PAL,HIPS	
...3		AA64-00289B	INDICATOR-LED;-,PCJ533R,-,ACRYL,-,CLR,-	S.N.A
...3		AA64-00288C	KNOB-POWER;-,43J5,GR806P MASTER,ABS,HB,G	S.N.A
...3		AA64-00287B	KNOB-CHA,VOL;-,PCJ533R,S/METALLIC+UV COA	S.N.A
...3		AA64-00286B	KNOB-CONTROL;-,PCJ533R,GR-806P,ABS,HB,GR	S.N.A
...3		AA61-30001A	LATCH-DOOR;-,-,-,KIFUCO LA701,-	S.N.A
..2		AA95-00262B	ASSY-PCB,CONTROL;-,SP43J5HP3S/XTT,CHINA,	
...3	CNW01	AA39-00120C	LEAD CONNECTOR-ASSY;,-,-,11P,-,-,-,35155	
...3	CNY01	3711-003973	CONNECTOR-HEADER;BOX,11P,1R,2.5mm,STRAIG	
...3	LEDY01	0601-001381	LED;ROUND,RED/GRN,5.0MM,650/563NM	
...3	PCB	AA41-00189A	PCB-CONTROL;J51A,1L,FR-1,330x245x1.6T,4A	S.N.A
...3	RMY01	AA59-60002B	MODULE-REMOCON;-,ORC-50HF,38KHZ,940MM,ME	
...3	SWY03	3404-000176	SWITCH-TACT;12V,50mA,120gf,6x6mm,SPST	
...3	SWY04	3404-000176	SWITCH-TACT;12V,50mA,120gf,6x6mm,SPST	
...3	SWY05	3404-000176	SWITCH-TACT;12V,50mA,120gf,6x6mm,SPST	
...3	SWY06	3404-000176	SWITCH-TACT;12V,50mA,120gf,6x6mm,SPST	
...3	SWY07	3404-000176	SWITCH-TACT;12V,50mA,120gf,6x6mm,SPST	
...3	SWY08	3404-000176	SWITCH-TACT;12V,50mA,120gf,6x6mm,SPST	
...3		AA61-20069A	HOLDER-WIRE;-,-,NYLON-66,V0,NTR,PAWH-5NA	S.N.A
...3		0202-000187	SOLDER-WIRE FLUX;-,RS60S,D1.2,63Sn/37Pb	S.N.A
...3		3301-001201	CORE-FERRITE;AE,230.5x10.25x36mm,1500,28	
...3		AA63-10002B	BAND-TIE;-,NYLON66 V2,-,-,L140,NTR,-,-	S.N.A
...3		AA99-20061Y	ASSY-PCB SUB,AUTO; AA95-00262B ,V	S.N.A
....4	CY01	2401-001496	C-AL;47uF,20%,16V,GP,TP,5x7,5	
....4	QY01	0504-000123	TR-DIGITAL;KSR1010,NPN,300mW,10K,TO-92,T	
....4	QY02	0504-000123	TR-DIGITAL;KSR1010,NPN,300mW,10K,TO-92,T	
....4	RY01	2001-000109	R-CARBON(S);470OHM,5%,1/2W,AA,TP,2.4X6.4	
....4	RY02	2001-000924	R-CARBON;680OHM,5%,1/8W,AA,TP,1.8X3.2MM	
....4	RY03	2001-000429	R-CARBON;1KOHM,5%,1/8W,AA,TP,1.8X3.2MM	
....4	RY04	2001-000449	R-CARBON;2.2KOHM,5%,1/8W,AA,TP,1.8X3.2M	
....4	RY05	2001-000924	R-CARBON;680OHM,5%,1/8W,AA,TP,1.8X3.2MM	
....4	RY06	2001-000429	R-CARBON;1KOHM,5%,1/8W,AA,TP,1.8X3.2MM	
....4	RY07	2001-000020	R-CARBON(S);22OHM,5%,1/2W,AA,TP,2.4X6.4M	
....4	RY08	2001-001108	R-CARBON(S);22KOHM,5%,1/2W,AA,TP,2.4X6.4	
....4	RY09	2001-000109	R-CARBON(S);470OHM,5%,1/2W,AA,TP,2.4X6.4	
..2		AA95-00098D	ASSY-PCB,POWER S/W;-,SP43J5HP3S/XTT,J51A	
...3	CNP01	AA39-20176G	LEAD CONNECTOR-ASSY;,-,-,3(2)P,-,-,-,YFH	
...3	CNP02	AA39-20176G	LEAD CONNECTOR-ASSY;,-,-,3(2)P,-,-,-,YFH	
...3	PCB	AA41-00035A	PCB-POWER S/W;J51A,1L,CEM-1,245x245x1.6T	S.N.A
...3	SWP01	3403-000179	SWITCH-PUSH;250V,5A,DPST,-,JPW-2104B	
...3		AA63-10002B	BAND-TIE;-,NYLON66 V2,-,-,L140,NTR,-,-	S.N.A
...3		AA99-20067C	ASSY-PCB SUB,AUTO; AA95-00098D ,V	S.N.A
...3		AA61-00110B	BRACKET-MASTER;-,PCJ533R,SECC-1,T1.0,NTR	S.N.A
...3		0202-000187	SOLDER-WIRE FLUX;-,RS60S,D1.2,63Sn/37Pb	S.N.A
...3		6003-000334	SCREW-TAPTITE;RH,+,2S,M3,L6,ZPC(YEL),SWR	S.N.A
..2		AA95-00046D	ASSY-AV SIDE;-,SP43J5HP3C/XTT,J51A,-,-,-	
...3	CNW02	AA39-20032J	LEAD CONNECTOR-ASSY;-,67096-12,S,12P,130	
...3	CNY02	3711-003641	CONNECTOR-HEADER;BOX,12P,1R,2.5mm,STRAIG	
...3	JK101	3722-001163	JACK-VHS;4P,12mm,AU,BLK,N	
...3	JK102	3722-001031	JACK-RCA;3P,3.6MM,#18,AU	
...3	PCB	AA41-10969B	PCB-A/V SIDE;KPT51A/52A,1L,FR-1,245X245X	S.N.A
...3		AA63-10002A	BAND-TIE;-,NYLON66 V2,-,-,L100,NTR,-,-	S.N.A
...3		AA98-60004J	ASSY-SUB,PART;APT51A,A/V,-,ALL	S.N.A
....4		0202-000187	SOLDER-WIRE FLUX;-,RS60S,D1.2,63Sn/37Pb	S.N.A
...3		AA99-20066X	ASSY-PCB SUB,AUTO; AA95-00046D ,V	S.N.A
....4	CP01	2202-000263	C-CERAMIC,MLC-AXIAL;470pF,10%,50V,Y5P,TP	
....4	CP02	2202-000263	C-CERAMIC,MLC-AXIAL;470pF,10%,50V,Y5P,TP	
....4	CP03	2202-000263	C-CERAMIC,MLC-AXIAL;470pF,10%,50V,Y5P,TP	
....4	CP04	2401-000302	C-AL;100uF,20%,25V,GP,TP,6.3x11,5	
....4	CP05	2401-000302	C-AL;100uF,20%,25V,GP,TP,6.3x11,5	
....4	CP06	2401-000302	C-AL;100uF,20%,25V,GP,TP,6.3x11,5	
....4	CP07	2401-000302	C-AL;100uF,20%,25V,GP,TP,6.3x11,5	
....4	CP08	2401-000302	C-AL;100uF,20%,25V,GP,TP,6.3x11,5	
....4	CP09	2202-000121	C-CERAMIC,MLC-AXIAL;100pF,10%,50V,Y5P,TP	
....4	CP10	2202-000121	C-CERAMIC,MLC-AXIAL;100pF,10%,50V,Y5P,TP	
....4	RP01	2001-000273	R-CARBON;100KOHM,5%,1/8W,AA,TP,1.8X3.2M	
....4	RP02	2001-000969	R-CARBON;75OHM,5%,1/8W,AA,TP,1.8X3.2MM	
....4	RP03	2001-000273	R-CARBON;100KOHM,5%,1/8W,AA,TP,1.8X3.2M	
....4	RP04	2001-000969	R-CARBON;75OHM,5%,1/8W,AA,TP,1.8X3.2MM	
....4	RP05	2001-000969	R-CARBON;75OHM,5%,1/8W,AA,TP,1.8X3.2MM	
...3		3301-001201	CORE-FERRITE;AE,230.5x10.25x36mm,1500,28	

ASSY-PCB,SUB

1	*	AA95-00425B	ASSY-PCB,SUB;-,SP53J5HF,J51A,PAL,-,-	
..2	C430	2301-001219	C-FILM,MPE-PPF;3.9nF,5%,1.6KV,TP,29x8.5x	
..2	C431	2306-000326	C-FILM,MPPF;4.7nF,5%,1.6KV,TP,28.5x16x9m	
..2	C432	2306-000267	C-FILM,MPPF;8.2nF,5%,1.6KV,TP,28.5x18.5x	
..2	C436	2306-000235	C-FILM,MPPF;560nF,5%,400V,TP,26*22.5*14,	
..2	C438	2306-000267	C-FILM,MPPF;8.2nF,5%,1.6KV,TP,28.5x18.5x	
..2	C471	2301-001091	C-FILM,MPPF;470nF,5%,400V,TP,26x21.5x14.	
..2	C473	2306-000322	C-FILM,MPPF;12nF,5%,1.6KV,TP,29x20.5x13,	
..2	C474	2306-000326	C-FILM,MPPF;4.7nF,5%,1.6KV,TP,28.5x16x9m	
..2	C477	2301-000213	C-FILM,PEF;220nF,5%,250V,TP,21.5x11,7.5	
..2	C801	2306-000321	C-FILM,MPPF;470NF,5%,275V,TP,-,22.5	
..2	C802	2306-000321	C-FILM,MPPF;470NF,5%,275V,TP,-,22.5	
..2	C812	2401-003465	C-AL;680UF,20%,450V,GP,BK,35X60MM,2	
..2	C831	2306-000323	C-FILM,MPPF;2.2nF,5%,1.6KV,TP,28.5x15.5x	
..2	C862	2401-002225	C-AL;3300uF,20%,50V,WT,BK,22x41,7.5	
..2	C865	2401-000737	C-AL;2200uF,20%,50V,GP,TP,18x35.5,7	
..2	C868	2401-000737	C-AL;2200uF,20%,50V,GP,TP,18x35.5,7	
..2	C875	2401-002251	C-AL;470uF,20%,200V,GP,BK,25x40mm,1	
..2	C876	2401-000787	C-AL;220uF,20%,160V,GP,TP,16x31.5mm	

Level	Loc. No.	Code No.	Description ; Specification	Remark
..2	C891	2201-000987	C-CERAMIC,DISC;2.2nF,20%,400V,Y5U,TP,12.	
..2	C892	2201-000987	C-CERAMIC,DISC;2.2nF,20%,400V,Y5U,TP,12.	
..2	CN201	AA39-00128A	LEAD CONNECTOR-ASSY;,-,-,8P,-,-,-,YBNH25	
..2	CN202	AA39-00115A	LEAD CONNECTOR-ASSY;,-,-,10P,-,-,-,YBNH2	
..2	CN203	3711-003052	CONNECTOR-HEADER;BOX,10P,1R,2.5mm,STRAGH	
..2	CN401	3711-003051	CONNECTOR-HEADER;BOX,8P,1R,2.5mm,STRAGHT	
..2	CN402	3711-003974	CONNECTOR-HEADER;BOX,12P,1R,2.5mm,STRAIG	
..2	CN801	AA39-00116A	LEAD CONNECTOR-ASSY;,-,-,12P,-,-,-,YBNH2	
..2	CN802	3711-003051	CONNECTOR-HEADER;BOX,8P,1R,2.5mm,STRAGHT	
..2	CNW406	AA39-00009A	LEAD CONNECTOR-ASSY;-,YFH800-03,S,3(2)P,	
..2	CNW809	AA39-20061G	LEAD CONNECTOR-ASSY;-,YFH800-03,S,3P,100	
⚠ ..2	D464	0402-000236	DIODE-RECTIFIER;GI824,400V,5A,-,TP	
⚠ ..2	D804	AA96-50310A	ASSY-H/S;-,POWER,AA62-30150C,RBV606,-	
...3		AA62-30150C	HEAT SINK-ES;-,A6063 EXTR,-,WHT,40(24.5)	S.N.A
...3		AA60-30003A	WASHER;-,-,-,T1.5,-,SBHG-1,-	S.N.A
...3		6003-000333	SCREW-TAPTITE;RH,+,2S,M3,L10,ZPC(YEL),SW	S.N.A
...3		0402-000549	DIODE-BRIDGE;RBV606,600V,6A,-,BK	
...3		0205-000129	GREASE-SILICON;SC102,JAPAN	S.N.A
⚠ ..2	D810	0402-000250	DIODE-RECTIFIER;RG4C,1000V,1A,-	
⚠ ..2	D854	AA96-00111C	ASSY-H/S;-,-,AA62-30013L,FML-G12S,-	
...3		0402-000233	DIODE-RECTIFIER;FML-G12S,200V,5A,-,-	
...3		6003-000333	SCREW-TAPTITE;RH,+,2S,M3,L10,ZPC(YEL),SW	S.N.A
...3		AA62-30013L	HEATSINK-ES;-,-,-,-,44/22,-,WHT,-,-,-,-	S.N.A
⚠ ..2	D871	AA96-00032A	ASSY-H/S;-,-,AA62-30173B,FMLG12, FMGG26	
...3		0402-000233	DIODE-RECTIFIER;FML-G12S,200V,5A,-,-	
...3		0402-000231	DIODE-RECTIFIER;FMG-G26S,600V,4A,TO-220F	
...3		AA62-30173B	HEAT-SINK,ES;-,-,T1.0,WHT,-,ALL,-,-,88X2	S.N.A
...3		6003-000333	SCREW-TAPTITE;RH,+,2S,M3,L10,ZPC(YEL),SW	S.N.A
...3		0205-000129	GREASE-SILICON;SC102,JAPAN	S.N.A
⚠ ..2	DZ481	0403-001327	DIODE-ZENER;MTZJ18A,16.22-17.06V,500mW,D	
⚠ ..2	F801	3601-001007	FUSE-CARTRIDGE;250V,6.3A,TIME-LAG,GLASS,	
⚠ ..2	F802	3601-001137	FUSE-AXIAL LEAD;250V,6A,SLOW-BLOW,GLASS,	
⚠ ..2	F804	3601-001007	FUSE-CARTRIDGE;250V,6.3A,TIME-LAG,GLASS,	
⚠ ..2	IC301	AA96-50381A	ASSY-H/S;-,-,AA62-30180B,LA7845,-	
...3		0205-000129	GREASE-SILICON;SC102,JAPAN	S.N.A
...3		1204-000517	IC-VERTIVAL DEF.;LA7845,SIP,7P,-,PLASTIC	
...3		6003-000333	SCREW-TAPTITE;RH,+,2S,M3,L10,ZPC(YEL),SW	S.N.A
...3		AA62-30180B	HEAT SINK-ES;-,A6063 EXTR.,2,WHT,70MM,-,	S.N.A
⚠ ..2	IC421	1203-000165	IC-POSI.ADJUST REG.;78R12,TO-220,3P,-,-,	
⚠ ..2	IC430	1203-000162	IC-POSI.ADJUST REG.;317,TO-220,3P,-,PLAS	
⚠ ..2	IC431	1201-000191	IC-OP AMP;4558,DIP,8P,300MIL,DUAL,20V/mV	
⚠ ..2	IC801	AA96-00035A	ASSY-H/S;-,POWER,AA62-30181P,STR-F6656,	
...3		0205-000129	GREASE-SILICON;SC102,JAPAN	S.N.A
...3		6003-000333	SCREW-TAPTITE;RH,+,2S,M3,L10,ZPC(YEL),SW	S.N.A
...3		AA13-00018A	IC-HYBRID;-,STR-F6656,LF1351,5PIN,-,-	
...3		AA62-30181P	HEAT-SINK,ES;-,-,T1.0,WHITE,SCREW-HOLE(2	S.N.A
⚠ ..2	IC804	1203-001400	IC-POWER PRESCALER;SE110N,T0-220(SIP),3P	
⚠ ..2	IC806	0604-001032	PHOTO-COUPLER;TR,170-260%,300mW,DIP-4,ST	
..2	L431	AA27-30003M	COIL-LINEARLITY;-,5uH,OWA14x15,USRC0.1x6	
..2	L432	AA27-40001U	COIL-HORIZ.WIDTH;-,220UH,DR1420,PI0.12X1	
..2	L482	2701-001033	INDUCTOR-AXIAL;1uH,10%,5x14mm	
..2	L800	AA29-30002L	FILTER-LINE NOISE;-,10mHMIN,5A,AC90~260V	
..2	L801	AA29-30002F	FILTER-LINE NOISE;-,6mH,2.45A,-,-	
..2	L803	AA29-00008A	FILTER-LINE NOISE;35-6MH 3A,-,6MHMIN,3A,	
..2	L854	AA27-10001C	COIL-CHOKE;-,100uH,K,-,5.0A,ST,700UH-K(R	
..2	L860	AA27-10001C	COIL-CHOKE;-,100uH,K,-,5.0A,ST,700UH-K(R	
..2	L862	AA27-10001C	COIL-CHOKE;-,100uH,K,-,5.0A,ST,700UH-K(R	
..2	L872	AA27-10001C	COIL-CHOKE;-,100uH,K,-,5.0A,ST,700UH-K(R	
..2	L874	AA27-10002L	COIL-CHOKE;-,24UH,K,-,2A,-,24UH-K,10X10M	
..2	PCB	AA41-00197B	PCB-SUB;P51A,1L,CEM-1,330x245x1.6T,1A,	S.N.A
⚠ ..2	Q431	AA96-00033C	ASSY H/S;-,H-OUT,AA62-30173C,2SC5144, F	
...3		AA60-30001A	WASHER-PLATE;M3,ID3.5,15X8.5,T1.0,-,SBHG	S.N.A
...3		AA62-30173C	HEAT SINK-ES;-,-,T1.0,WHITE,SCREW-HOLE(2	S.N.A
...3		6003-000333	SCREW-TAPTITE;RH,+,2S,M3,L10,ZPC(YEL),SW	S.N.A
...3		0502-001121	TR-POWER;2SC5144,NPN,200W,TO-3PL,BK,10-	
...3		0402-001296	DIODE-RECTIFIER;FMP-3FU,1.5KV,5A,TO-3PF,	
...3		0205-000129	GREASE-SILICON;SC102,JAPAN	S.N.A
⚠ ..2	Q433	AA96-50407A	ASSY-H/S;-,-,AA62-30154G,KSD73Y,-	
...3		0205-000129	GREASE-SILICON;SC102,JAPAN	S.N.A
...3		0502-000298	TR-POWER;KSD73,NPN,30W,TO-220,-,120-240	
...3		6003-000333	SCREW-TAPTITE;RH,+,2S,M3,L10,ZPC(YEL),SW	S.N.A
...3		AA62-30154G	HEAT SINK-ES;-,A6063 EXTR,-,WHT,50/16,-,	S.N.A
⚠ ..2	Q441	AA96-50383F	ASSY-H/S;-,-,AA62-30180D,2SD921,-	
...3		0205-000129	GREASE-SILICON;SC102,JAPAN	S.N.A
...3		0502-001104	TR-POWER;2SD921,NPN,80W,TO-3P,BK,700-	
...3		6003-000333	SCREW-TAPTITE;RH,+,2S,M3,L10,ZPC(YEL),SW	S.N.A

Level	Loc. No.	Code No.	Description ; Specification	Remark
...3		AA62-30180D	HEAT SINK-ES;-,A6063 EXTR.,2,WHT,50mm,-,	S.N.A
⚠ ..2	Q472	0505-000156	FET-SILICON;IRF620,N,200V,5A,0.8ohm,50W,	S.N.A
⚠ ..2	Q473	AA96-00037A	ASSY-H/S;-,-,AA62-30181N,2SC4125, IRFS6	
...3		0502-001100	TR-POWER;2SC4125,NPN,70W,TO-3PML,BK,8-	
...3		AA62-30181N	HEAT-SINK,ES;-,-,T1.0,WHITE,SCREW-HOLE(2	S.N.A
...3		AA60-30001A	WASHER-PLATE;M3,ID3.5,15X8.5,T1.0,-,SBHG	S.N.A
...3		6003-000333	SCREW-TAPTITE;RH,+,2S,M3,L10,ZPC(YEL),SW	S.N.A
...3		0505-001202	FET-SILICON;IRFS640A,N,200V,9.8A,0.18ohm	S.N.A
...3		0205-000129	GREASE-SILICON;SC102,JAPAN	S.N.A
..2	R440	2008-001091	R-FUSIBLE(S);0.47OHM,10%,1/2W,AC,BK,2.5X	
..2	R442	2008-000189	R-FUSIBLE;0.47ohm,10%,2W,AA,TP,6x15.5mm	
..2	R445	2008-001091	R-FUSIBLE(S);0.47OHM,10%,1/2W,AC,BK,2.5X	
..2	R803	1404-001195	THERMISTOR-NTC;5.1ohm,15%,2900,27mW/C,BK	
..2	R815	2003-002162	R-METAL OXIDE(S);15KOHM,5%,3W,AG,TP,6X16	
..2	R815A	2003-002162	R-METAL OXIDE(S);15KOHM,5%,3W,AG,TP,6X16	
..2	R817	2009-001096	R-METAL PLATE;0.07ohm,5%,5W,CL,BK,5x14x1	
..2	R841	2008-001096	R-FUSIBLE(S);3.3OHM,5%,1/2W,AC,BK,2.5X6.	
⚠ ..2	T431	AA26-50001U	TRANS-HORIZ.DRIVE;-,28mH,105uH,4uH,ER28x	
⚠ ..2	T432	AA26-00053A	TRANS;-,1.2mH,-,-,EER4445,BK,1.2mH,-	
⚠ ..2	T444	AA26-30005A	TRANS-FLYBACK;-,FWZ-50A001,50,108V	
⚠ ..2	T461	AA26-50001V	TRANS-HORIZ.DRIVE;-,6.0mH,113uH,4uH,EI19	
⚠ ..2	T481	AA26-50001W	TRANS-HORIZ.DRIVE;-,830uH,23uH,4uH,EI-30	
⚠ ..2	T802	AA26-00006A	TRANS-SWITCHING;-,90~260V,110V/34V/+-30V	
..2		0202-000187	SOLDER-WIRE FLUX;-,RS60S,D1.2,63Sn/37Pb	S.N.A
..2		AA65-30110A	CLAMP-WIRE;NYLON 66,V2,BLK,PAL TVI,ALL M	S.N.A
..2		0403-001325	DIODE-ZENER;MTZJ15C,14.35-15.09V,500mW,D	
..2		AA65-30109A	CLAMP-FBT;NYLON-66,V2,BLK,-,-,-	S.N.A
..2		AA62-00010A	HEAT SINK;-,-,T1.0,SILVER,H/SINK & SHIEL	S.N.A
..2		AA99-20069B	ASSY-PCB SUB,AUTO; AA95-00425B ,V	S.N.A
...3	C301	2305-000149	C-FILM,MPEF;100nF,5%,100V,TP,12x12.5x6.5	
...3	C302	2201-000292	C-CERAMIC,DISC;1nF,10%,50V,Y5P,TP,5x3.5,	
...3	C303	2305-000149	C-FILM,MPEF;100nF,5%,100V,TP,12x12.5x6.5	
...3	C304	2201-000292	C-CERAMIC,DISC;1nF,10%,50V,Y5P,TP,5x3.5,	
...3	C305	2201-002022	C-CERAMIC,DISC;0.005nF,0.25pF,500V,NP0,T	
...3	C307	2401-000365	C-AL;100uF,20%,50V,WT,TP,10x12.5mm,	
...3	C308	2401-000365	C-AL;100uF,20%,50V,WT,TP,10x12.5mm,	
...3	C309	2305-000285	C-FILM,MPEF;220NF,5%,100V,TP,10.5X5.5X15	
...3	C311	2305-000149	C-FILM,MPEF;100nF,5%,100V,TP,12x12.5x6.5	
...3	C412	2301-000383	C-FILM,PEF;10nF,5%,50V,TP,6x7x3.2mm,5mm	
...3	C413	2401-000360	C-AL;100uF,20%,50V,GP,TP,8x11.5,5	
...3	C417	2401-001397	C-AL;470uF,20%,25V,GP,TP,10x16,5	
...3	C418	2401-000360	C-AL;100uF,20%,50V,GP,TP,8x11.5,5	
...3	C419	2201-000180	C-CERAMIC,DISC;10nF,10%,50V,Y5V,TP,7x3,5	
...3	C426	2401-000360	C-AL;100uF,20%,50V,GP,TP,8x11.5,5	
...3	C427	2401-002300	C-AL;47uF,20%,50V,GP,TP,6.3x11,5	
...3	C428	2306-000122	C-FILM,MPPF;100nF,5%,50V,TP,7.3x4.0x5.0m	
...3	C437	2401-003114	C-AL;4.7uF,20%,250V,WT,TP,10x16,5	
...3	C441	2401-000262	C-AL;100uF,20%,160V,HR,TP,16x25,7.5	
...3	C445	2401-001622	C-AL;6.8uF,20%,50V,BP,TP,16x25mm,7.	
...3	C450	2401-000262	C-AL;100uF,20%,160V,HR,TP,16x25,7.5	
...3	C451	2401-001160	C-AL;33uF,20%,160V,GP,-,16x35mm,7.5	
...3	C452	2201-000132	C-CERAMIC,DISC;0.1nF,10%,500V,Y5P,TP,6.5	
...3	C453	2401-002288	C-AL;470uF,20%,25V,WT,TP,10x20,5	
...3	C454	2401-001429	C-AL;470uF,20%,50V,GP,TP,13x20,5	
...3	C455	2201-000132	C-CERAMIC,DISC;0.1nF,10%,500V,Y5P,TP,6.5	
...3	C457	2201-000132	C-CERAMIC,DISC;0.1nF,10%,500V,Y5P,TP,6.5	
...3	C458	2401-002288	C-AL;470uF,20%,25V,WT,TP,10x20,5	
...3	C467	2401-000360	C-AL;100uF,20%,50V,GP,TP,8x11.5,5	
...3	C468	2201-000119	C-CERAMIC,DISC;100nF,+80-20%,50V,Y5V,TP,	
...3	C469	2201-000180	C-CERAMIC,DISC;10nF,10%,50V,Y5V,TP,7x3,5	
...3	C472	2401-000262	C-AL;100uF,20%,160V,HR,TP,16x25,7.5	
...3	C476	2401-000647	C-AL;2.2uF,20%,50V,BP,TP,5x11,5	
...3	C478	2301-000020	C-FILM,PEF;27nF,5%,100V,TP,7.3x4x12.5mm,	
...3	C479	2301-000200	C-FILM,PEF;2.2nF,5%,200V,TP,11.0x6.0x9.0	
...3	C483	2401-000660	C-AL;2.2uF,20%,50V,GP,TP,5x11,5	
...3	C484	2201-000132	C-CERAMIC,DISC;0.1nF,10%,500V,Y5P,TP,6.5	
...3	C809	2201-000551	C-CERAMIC,DISC;0.47nF,10%,1kV,Y5P,TP,6.3	
...3	C814	2201-002041	C-CERAMIC,DISC;0.82nF,10%,2kV,Y5P,TP,9x5	
...3	C815	2201-000406	C-CERAMIC,DISC;0.27nF,10%,2kV,Y5P,TP,6.3	
...3	C816	2201-000332	C-CERAMIC,DISC;2.2nF,20%,250V,Y5U,TP,9x4	
...3	C817	2201-000332	C-CERAMIC,DISC;2.2nF,20%,250V,Y5U,TP,9x4	
...3	C818	2301-001216	C-FILM,PPF;47nF,5%,630V,TP,20x14.5x22,7.	
...3	C819	2201-000332	C-CERAMIC,DISC;2.2nF,20%,250V,Y5U,TP,9x4	
...3	C833	2201-000292	C-CERAMIC,DISC;1nF,10%,50V,Y5P,TP,5x3.5,	
...3	C834	2401-003028	C-AL;100uF,20%,25V,WT,TP,6.3x11,5	
...3	C851	2201-000551	C-CERAMIC,DISC;0.47nF,10%,1kV,Y5P,TP,6.3	

Level	Loc. No.	Code No.	Description ; Specification	Remark
...3	C852	2401-000133	C-AL;1000uF,20%,16V,GP,TP,10x20,5	
...3	C854	2201-000551	C-CERAMIC,DISC;0.47nF,10%,1kV,Y5P,TP,6.3	
...3	C855	2401-003141	C-AL;2200uF,20%,25V,WT,TP,13x25,5mm	
...3	C857	2401-000133	C-AL;1000uF,20%,16V,GP,TP,10x20,5	
...3	C861	2201-000551	C-CERAMIC,DISC;0.47nF,10%,1kV,Y5P,TP,6.3	
...3	C864	2201-000551	C-CERAMIC,DISC;0.47nF,10%,1kV,Y5P,TP,6.3	
...3	C866	2401-000192	C-AL;1000uF,20%,50V,GP,TP,16x25,7.5	
...3	C869	2401-000192	C-AL;1000uF,20%,50V,GP,TP,16x25,7.5	
...3	C871	2201-000551	C-CERAMIC,DISC;0.47nF,10%,1kV,Y5P,TP,6.3	
...3	C872	2401-000703	C-AL;2200uF,20%,25V,GP,-,12.5x25mm,	
...3	C873	2401-001998	C-AL;1000uF,20%,25V,GP,TP,10x20,5mm	
...3	C874	2201-000551	C-CERAMIC,DISC;0.47nF,10%,1kV,Y5P,TP,6.3	
...3	C877	2305-000427	C-FILM,MPEF;47nF,5%,100V,TP,7.5x12.5x3.5	
...3	D302	0402-000546	DIODE-RECTIFIER;TVR10G,400V,1.0A,DO-41,T	
⚠ ...3	D433	0402-000537	DIODE-RECTIFIER;RH1A,600V,0.6A,DO-204AC	
⚠ ...3	D435	0402-000132	DIODE-RECTIFIER;1N4004,400V,1A,DO-41,TP	
⚠ ...3	D436	0401-000005	DIODE-SWITCHING;1N4148,100V,200MA,DO-35,	
⚠ ...3	D438	0402-000546	DIODE-RECTIFIER;TVR10G,400V,1.0A,DO-41,T	
⚠ ...3	D440	0402-000534	DIODE-RECTIFIER;RG10V,400V,1.2A,DO-201,T	
⚠ ...3	D441	0402-000534	DIODE-RECTIFIER;RG10V,400V,1.2A,DO-201,T	
⚠ ...3	D444	0402-000546	DIODE-RECTIFIER;TVR10G,400V,1.0A,DO-41,T	
⚠ ...3	D445	0402-000534	DIODE-RECTIFIER;RG10V,400V,1.2A,DO-201,T	
⚠ ...3	D472	0402-000546	DIODE-RECTIFIER;TVR10G,400V,1.0A,DO-41,T	
⚠ ...3	D474	0402-000546	DIODE-RECTIFIER;TVR10G,400V,1.0A,DO-41,T	
⚠ ...3	D801	1405-000187	VARISTOR;750V,1250A,12.5x7mm,TP	
⚠ ...3	D802	1405-000187	VARISTOR;750V,1250A,12.5x7mm,TP	
⚠ ...3	D834	0402-000546	DIODE-RECTIFIER;TVR10G,400V,1.0A,DO-41,T	
⚠ ...3	D843	0402-000546	DIODE-RECTIFIER;TVR10G,400V,1.0A,DO-41,T	
⚠ ...3	D851	0402-000493	DIODE-RECTIFIER;1R5GU41,400V,1.5A,DO-15L	
...3	DZ301	0403-001328	DIODE-ZENER;MTZJ22A,20.15-21.20V,500mW,D	
...3	DZ304	0403-001327	DIODE-ZENER;MTZJ18A,16.22-17.06V,500mW,D	
...3	DZ305	0403-001329	DIODE-ZENER;MTZJ24B,22.61-23.77V,500mW,D	
...3	DZ306	0403-001167	DIODE-ZENER;MTZJ30D,30V,29.02-30.51V,500	
...3	DZ307	0403-001329	DIODE-ZENER;MTZJ24B,22.61-23.77V,500mW,D	
...3	DZ413	0403-001319	DIODE-ZENER;MTZJ4.7C,4.68-4.93V,500mW,DO	
...3	DZ473	0403-000720	DIODE-ZENER;MTZJ9.1B,9.1V,8.57-9.01V,500	
...3	DZ842	0403-000700	DIODE-ZENER;TZP33A,33V,31-35V,1W,DO-41,T	
...3	DZ858	0403-001325	DIODE-ZENER;MTZJ15C,14.35-15.09V,500mW,D	
...3	F801A	3602-000114	FUSE-HOLDER;-,-,30mohm	S.N.A
...3	F801B	3602-000114	FUSE-HOLDER;-,-,30mohm	S.N.A
...3	F804A	3602-000114	FUSE-HOLDER;-,-,30mohm	S.N.A
...3	F804B	3602-000114	FUSE-HOLDER;-,-,30mohm	S.N.A
...3	F805	3601-001086	FUSE-AXIAL LEAD;125V,5A,FAST-ACTING,GLAS	
...3	F806	3601-001065	FUSE-AXIAL LEAD;125V,3.5A,FAST-ACTING,CE	
⚠ ...3	F854	3601-001086	FUSE-AXIAL LEAD;125V,5A,FAST-ACTING,GLAS	
⚠ ...3	F855	3601-001086	FUSE-AXIAL LEAD;125V,5A,FAST-ACTING,GLAS	
⚠ ...3	F871	3601-001086	FUSE-AXIAL LEAD;125V,5A,FAST-ACTING,GLAS	
...3	L481	3301-000287	CORE-FERRITE BEAD;AA,3.5x1.0x6.0mm,1500,	
...3	L483	2901-000299	FILTER-EMI ON BOARD;-,6A,UL/CSA,-,9x7.5,	
...3	L492	2701-000115	INDUCTOR-AXIAL;10uH,10%,3x7mm	
...3	L493	2901-000297	FILTER-EMI ON BOARD;-,3A,-,-,3.5x5,TP,-	
...3	L494	3301-000287	CORE-FERRITE BEAD;AA,3.5x1.0x6.0mm,1500,	
...3	L495	2901-000297	FILTER-EMI ON BOARD;-,3A,-,-,3.5x5,TP,-	
...3	L806	2901-000297	FILTER-EMI ON BOARD;-,3A,-,-,3.5x5,TP,-	
...3	L807	2901-000297	FILTER-EMI ON BOARD;-,3A,-,-,3.5x5,TP,-	
...3	L808	3301-000287	CORE-FERRITE BEAD;AA,3.5x1.0x6.0mm,1500,	
...3	L810	2901-000297	FILTER-EMI ON BOARD;-,3A,-,-,3.5x5,TP,-	
...3	L811	2901-000297	FILTER-EMI ON BOARD;-,3A,-,-,3.5x5,TP,-	
...3	L812	2901-000297	FILTER-EMI ON BOARD;-,3A,-,-,3.5x5,TP,-	
...3	L813	2901-000297	FILTER-EMI ON BOARD;-,3A,-,-,3.5x5,TP,-	
...3	L814	3301-000287	CORE-FERRITE BEAD;AA,3.5x1.0x6.0mm,1500,	
...3	L815	2901-000297	FILTER-EMI ON BOARD;-,3A,-,-,3.5x5,TP,-	
...3	L816	2901-000297	FILTER-EMI ON BOARD;-,3A,-,-,3.5x5,TP,-	
...3	L831	3301-000287	CORE-FERRITE BEAD;AA,3.5x1.0x6.0mm,1500,	
...3	L832	3301-000287	CORE-FERRITE BEAD;AA,3.5x1.0x6.0mm,1500,	
...3	L851	2901-000297	FILTER-EMI ON BOARD;-,3A,-,-,3.5x5,TP,-	
...3	L857	3301-000287	CORE-FERRITE BEAD;AA,3.5x1.0x6.0mm,1500,	
...3	L859	3301-000287	CORE-FERRITE BEAD;AA,3.5x1.0x6.0mm,1500,	
...3	Q301	0501-000389	TR-SMALL SIGNAL;KSC815,NPN,400mW,TO-92,T	
...3	Q432	0501-000283	TR-SMALL SIGNAL;KSA539,PNP,400mW,TO-92,T	
...3	R301	2004-001897	R-METAL(S);43.2Kohm,1%,1/2W,AA,TP,2.5x6.	
...3	R302	2004-001897	R-METAL(S);43.2Kohm,1%,1/2W,AA,TP,2.5x6.	
...3	R303	2004-001984	R-METAL(S);26.7Kohm,1%,1/2W,AA,TP,2.4x6.	
...3	R305	2004-001984	R-METAL(S);26.7Kohm,1%,1/2W,AA,TP,2.4x6.	
...3	R306	2003-001036	R-METAL OXIDE(S);3.3ohm,5%,2W,AF,TP,3.9x	
...3	R307	2003-001036	R-METAL OXIDE(S);3.3ohm,5%,2W,AF,TP,3.9x	
...3	R308	2001-000016	R-CARBON(S);1OHM,5%,1/2W,AA,TP,2.4X6.4MM	

Level	Loc. No.	Code No.	Description ; Specification	Remark
...3	R310	2003-002150	R-METAL OXIDE;27OOHM,5%,2W,AG,TP,6X16MM	
...3	R312	2001-000290	R-CARBON;10KOHM,5%,1/8W,AA,TP,1.8X3.2MM	
...3	R313	2001-000761	R-CARBON;43OOHM,5%,1/8W,AA,TP,1.8X3.2MM	
...3	R314	2001-000761	R-CARBON;43OOHM,5%,1/8W,AA,TP,1.8X3.2MM	
...3	R332	2001-001107	R-CARBON(S);220ohm,5%,1/2W,AA,TP,2.4x6.4	
...3	R333	2001-001107	R-CARBON(S);220ohm,5%,1/2W,AA,TP,2.4x6.4	
...3	R334	2001-001107	R-CARBON(S);220ohm,5%,1/2W,AA,TP,2.4x6.4	
...3	R405	2009-001109	R-TEMPERATURE;240ohm,5%,1/4W,AA,TP,2.3x6	
...3	R406	2004-001983	R-METAL(S);2.49Kohm,1%,1/2W,AA,TP,2.4x6.	
...3	R407	2004-001897	R-METAL(S);43.2Kohm,1%,1/2W,AA,TP,2.5x6.	
...3	R408	2004-001402	R-METAL(S);6.8Kohm,1%,1/2W,AA,TP,2.4x6.4	
...3	R409	2001-001178	R-CARBON(S);68OOHM,5%,1/2W,AA,TP,2.4X6.4	
...3	R410	2001-000052	R-CARBON(S);3.3KOHM,5%,1/2W,AA,TP,2.4X6.	
...3	R412	2001-000362	R-CARBON;15OOHM,5%,1/8W,AA,TP,1.8X3.2MM	
...3	R419	2001-000290	R-CARBON;10KOHM,5%,1/8W,AA,TP,1.8X3.2MM	
...3	R424	2008-000299	R-FUSIBLE(S);47ohm,5%,2W,AF,TP,3.9x10mm	
...3	R426	2003-002153	R-METAL OXIDE;4.7OHM,5%,2W,AG,TP,6X16MM	
...3	R427	2003-002152	R-METAL OXIDE;1OHM,5%,2W,AG,TP,6X16MM	
...3	R427A	2003-002152	R-METAL OXIDE;1OHM,5%,2W,AG,TP,6X16MM	
...3	R428	2002-001017	R-COMPOSITION;1Kohm,10%,1/2W,AA,TP,3.7x9	
...3	R428A	2002-001017	R-COMPOSITION;1Kohm,10%,1/2W,AA,TP,3.7x9	
...3	R429	2003-000586	R-METAL OXIDE(S);22Kohm,5%,2W,AF,TP,4x12	
...3	R430	2003-000586	R-METAL OXIDE(S);22Kohm,5%,2W,AF,TP,4x12	
...3	R433	2001-001155	R-CARBON(S);5.6KOHM,5%,1/2W,AA,TP,2.4X6.	
...3	R434	2001-001093	R-CARBON(S);2.2KOHM,5%,1/2W,AA,TP,2.4X6.	
...3	R441	2008-000189	R-FUSIBLE;0.47ohm,10%,2W,AA,TP,6x15.5mm	
...3	R444	2003-000995	R-METAL OXIDE(S);3.3Kohm,5%,2W,AF,TP,3.9	
...3	R462	2003-002026	R-METAL OXIDE(S);4.7ohm,5%,1W,AF,TP,2.5x	
...3	R463	2003-001024	R-METAL OXIDE(S);150ohm,5%,2W,AF,TP,3.9x	
...3	R464	2003-002158	R-METAL OXIDE;0.68OHM,5%,1W,AG,TP,4.3X12	
...3	R465	2001-001043	R-CARBON(S);0OHM,5%,1/2W,AA,TP,2.4X6.4MM	
...3	R466	2004-001386	R-METAL(S);16.9Kohm,1%,1/2W,AA,TP,2.4x6.	
...3	R467	2004-001986	R-METAL(S);35.7Kohm,1%,1/2W,AA,TP,2.4x6.	
...3	R468	2001-001122	R-CARBON(S);3.9KOHM,5%,1/2W,AA,TP,2.4X6.	
...3	R469	2004-001390	R-METAL(S);1Kohm,2%,1/2W,AA,TP,2.4x6.4mm	
...3	R470	2001-000028	R-CARBON(S);100OHM,5%,1/2W,AA,TP,2.4X6.4	
...3	R471	2004-002011	R-METAL(S);110Kohm,1%,1/2W,AA,TP,2.4x6.4	
...3	R472	2008-000252	R-FUSIBLE(S);0.47ohm,10%,1/2W,AF,TP,2.5x	
...3	R473	2004-001395	R-METAL(S);330Kohm,2%,1/2W,AA,TP,2.4x6.4	
...3	R486	2003-002014	R-METAL OXIDE(S);0.6OHM,5%,2W,AF,TP,3.9X	
...3	R488	2001-000273	R-CARBON;100KOHM,5%,1/8W,AA,TP,1.8X3.2M	
...3	R808	2001-000002	R-CARBON(S);200KOHM,5%,1/2W,AA,TP,6.4X2.	
...3	R808A	2001-000002	R-CARBON(S);200KOHM,5%,1/2W,AA,TP,6.4X2.	
...3	R810	2002-001010	R-COMPOSITION;1.8Mohm,5%,1/2W,AA,TP,3.7x	
...3	R812	2003-002151	R-METAL OXIDE;18KOHM,5%,2W,AG,TP,6X16MM	
...3	R814	2003-002151	R-METAL OXIDE;18KOHM,5%,2W,AG,TP,6X16MM	
...3	R816	2004-004029	R-METAL(S);10Kohm,1%,1/2W,AA,TP,2.5x6.5m	
...3	R825	2002-001010	R-COMPOSITION;1.8Mohm,5%,1/2W,AA,TP,3.7x	
...3	R832	2001-001178	R-CARBON(S);68OOHM,5%,1/2W,AA,TP,2.4X6.4	
...3	R834	2001-001097	R-CARBON(S);2.4KOHM,5%,1/2W,AA,TP,2.4X6.	
...3	R837	2001-001097	R-CARBON(S);2.4KOHM,5%,1/2W,AA,TP,2.4X6.	
...3	R838	2001-001097	R-CARBON(S);2.4KOHM,5%,1/2W,AA,TP,2.4X6.	
...3	R855	2001-001196	R-CARBON(S);9.1KOHM,5%,1/2W,AA,TP,2.4X6.	
...3	R856	2001-001155	R-CARBON(S);5.6KOHM,5%,1/2W,AA,TP,2.4X6.	
...3	R857	2001-001155	R-CARBON(S);5.6KOHM,5%,1/2W,AA,TP,2.4X6.	
...3	R871	2001-001088	R-CARBON(S);1KOHM,5%,1/2W,AA,TP,2.4X6.4M	
...3	R872	2001-001088	R-CARBON(S);1KOHM,5%,1/2W,AA,TP,2.4X6.4M	
...3	R873	2001-001097	R-CARBON(S);2.4KOHM,5%,1/2W,AA,TP,2.4X6.	
...3	R891	2002-001012	R-COMPOSITION;8.2Mohm,5%,1/2W,AA,TP,3.7x	
...3	VR471	2103-001024	VR-SEMI;50Kohm,25%,0.3W,TOP	
..2		AA65-30105B	CLAMP-WIRE;NYLON 66,V2,NTR,25MM,ALL MODE	S.N.A
..2		6003-001023	SCREW-TAPTITE;RWH,+,B,M3,L10,ZPC(YEL),SW	S.N.A

ASSY-PCB,CONV MDL

1	*	AA95-00422B	ASSY-PCB,CONV MDL;-,SP43J5HP,J51A,-,-,-	
..2	C163	2305-000289	C-FILM,MPEF;220nF,5%,63V,TP,-,5mm	
..2	CN101	3711-002709	CONNECTOR-HEADER;NOWALL,12P,1R,2.5MM,ANG	
..2	CN102	3711-002709	CONNECTOR-HEADER;NOWALL,12P,1R,2.5MM,ANG	
⚠ ..2	IC113	1203-000641	IC-RESET;7442,TO-92,3P,-,PLASTIC,-0.3/7	
..2		0202-001004	SOLDER-CREAM;SQ-2030M SZH-1,S63A,D0.04,6	S.N.A
..2		0202-000187	SOLDER-WIRE FLUX;-,RS60S,D1.2,63Sn/37Pb	S.N.A
..2		AA63-00143A	SHIELD-CASE;-,SPTE T0.5,T0.5,ALLMIGHT,CO	S.N.A
..2		AA99-20068A	ASSY-PCB SUB,AUTO; AA95-00422B ,V	S.N.A

Level	Loc. No.	Code No.	Description ; Specification	Remark
...3	C101	2404-000275	C-TA,CHIP;100UF,10%,10V,GP,TP,7343	
...3	C102	2404-000275	C-TA,CHIP;100UF,10%,10V,GP,TP,7343	
...3	C103	2404-000256	C-TA,CHIP;47UF,20%,16V,GP,TP,7343	
...3	C104	2203-000218	C-CERAMIC,CHIP;100nF,20%,50V,Y5V,TP,2012	
...3	C105	2203-000858	C-CERAMIC,CHIP;0.039nF,5%,50V,NP0,TP,201	
...3	C106	2203-000218	C-CERAMIC,CHIP;100nF,20%,50V,Y5V,TP,2012	
...3	C107	2203-000716	C-CERAMIC,CHIP;3.3nF,10%,50V,X7R,TP,2012	
...3	C108	2203-000218	C-CERAMIC,CHIP;100nF,20%,50V,Y5V,TP,2012	
...3	C109	2203-000218	C-CERAMIC,CHIP;100nF,20%,50V,Y5V,TP,2012	
...3	C110	2203-000444	C-CERAMIC,CHIP;1nF,10%,50V,X7R,TP,2012,-	
...3	C111	2203-000218	C-CERAMIC,CHIP;100nF,20%,50V,Y5V,TP,2012	
...3	C112	2203-000683	C-CERAMIC,CHIP;0.027nF,5%,50V,NP0,TP,201	
...3	C113	2203-000683	C-CERAMIC,CHIP;0.027nF,5%,50V,NP0,TP,201	
...3	C114	2203-000218	C-CERAMIC,CHIP;100nF,20%,50V,Y5V,TP,2012	
...3	C115	2203-000218	C-CERAMIC,CHIP;100nF,20%,50V,Y5V,TP,2012	
...3	C116	2203-000218	C-CERAMIC,CHIP;100nF,20%,50V,Y5V,TP,2012	
...3	C117	2203-000218	C-CERAMIC,CHIP;100nF,20%,50V,Y5V,TP,2012	
...3	C118	2203-000218	C-CERAMIC,CHIP;100nF,20%,50V,Y5V,TP,2012	
...3	C119	2203-000218	C-CERAMIC,CHIP;100nF,20%,50V,Y5V,TP,2012	
...3	C120	2203-000218	C-CERAMIC,CHIP;100nF,20%,50V,Y5V,TP,2012	
...3	C121	2203-000218	C-CERAMIC,CHIP;100nF,20%,50V,Y5V,TP,2012	
...3	C122	2203-000218	C-CERAMIC,CHIP;100nF,20%,50V,Y5V,TP,2012	
...3	C123	2203-000218	C-CERAMIC,CHIP;100nF,20%,50V,Y5V,TP,2012	
...3	C124	2203-000218	C-CERAMIC,CHIP;100nF,20%,50V,Y5V,TP,2012	
...3	C125	2203-000218	C-CERAMIC,CHIP;100nF,20%,50V,Y5V,TP,2012	
...3	C126	2203-000218	C-CERAMIC,CHIP;100nF,20%,50V,Y5V,TP,2012	
...3	C127	2203-000218	C-CERAMIC,CHIP;100nF,20%,50V,Y5V,TP,2012	
...3	C128	2203-000218	C-CERAMIC,CHIP;100nF,20%,50V,Y5V,TP,2012	
...3	C129	2203-000218	C-CERAMIC,CHIP;100nF,20%,50V,Y5V,TP,2012	
...3	C130	2203-000218	C-CERAMIC,CHIP;100nF,20%,50V,Y5V,TP,2012	
...3	C131	2203-000218	C-CERAMIC,CHIP;100nF,20%,50V,Y5V,TP,2012	
...3	C132	2203-000408	C-CERAMIC,CHIP;0.18nF,5%,50V,NP0,TP,2012	
...3	C133	2404-001098	C-TA,CHIP;1uF,20%,25V,GP,TP,3216,-	
...3	C134	2203-000218	C-CERAMIC,CHIP;100nF,20%,50V,Y5V,TP,2012	
...3	C135	2203-000716	C-CERAMIC,CHIP;3.3nF,10%,50V,X7R,TP,2012	
...3	C136	2203-000218	C-CERAMIC,CHIP;100nF,20%,50V,Y5V,TP,2012	
...3	C137	2203-000716	C-CERAMIC,CHIP;3.3nF,10%,50V,X7R,TP,2012	
...3	C138	2203-000408	C-CERAMIC,CHIP;0.18nF,5%,50V,NP0,TP,2012	
...3	C139	2203-000218	C-CERAMIC,CHIP;100nF,20%,50V,Y5V,TP,2012	
...3	C140	2404-001098	C-TA,CHIP;1uF,20%,25V,GP,TP,3216,-	
...3	C141	2203-000408	C-CERAMIC,CHIP;0.18nF,5%,50V,NP0,TP,2012	
...3	C142	2404-001098	C-TA,CHIP;1uF,20%,25V,GP,TP,3216,-	
...3	C143	2203-000218	C-CERAMIC,CHIP;100nF,20%,50V,Y5V,TP,2012	
...3	C144	2203-000716	C-CERAMIC,CHIP;3.3nF,10%,50V,X7R,TP,2012	
...3	C145	2203-000218	C-CERAMIC,CHIP;100nF,20%,50V,Y5V,TP,2012	
...3	C146	2203-000716	C-CERAMIC,CHIP;3.3nF,10%,50V,X7R,TP,2012	
...3	C147	2203-000408	C-CERAMIC,CHIP;0.18nF,5%,50V,NP0,TP,2012	
...3	C148	2404-001098	C-TA,CHIP;1uF,20%,25V,GP,TP,3216,-	
...3	C149	2203-000218	C-CERAMIC,CHIP;100nF,20%,50V,Y5V,TP,2012	
...3	C150	2203-000218	C-CERAMIC,CHIP;100nF,20%,50V,Y5V,TP,2012	
...3	C151	2203-000408	C-CERAMIC,CHIP;0.18nF,5%,50V,NP0,TP,2012	
...3	C152	2404-001098	C-TA,CHIP;1uF,20%,25V,GP,TP,3216,-	
...3	C153	2203-000218	C-CERAMIC,CHIP;100nF,20%,50V,Y5V,TP,2012	
...3	C154	2203-000716	C-CERAMIC,CHIP;3.3nF,10%,50V,X7R,TP,2012	
...3	C155	2203-000218	C-CERAMIC,CHIP;100nF,20%,50V,Y5V,TP,2012	
...3	C156	2203-000716	C-CERAMIC,CHIP;3.3nF,10%,50V,X7R,TP,2012	
...3	C157	2203-000408	C-CERAMIC,CHIP;0.18nF,5%,50V,NP0,TP,2012	
...3	C158	2404-001098	C-TA,CHIP;1uF,20%,25V,GP,TP,3216,-	
...3	C159	2203-000218	C-CERAMIC,CHIP;100nF,20%,50V,Y5V,TP,2012	
...3	C160	2203-000218	C-CERAMIC,CHIP;100nF,20%,50V,Y5V,TP,2012	
...3	C161	2404-000256	C-TA,CHIP;47UF,20%,16V,GP,TP,7343	
...3	C162	2404-000256	C-TA,CHIP;47UF,20%,16V,GP,TP,7343	
...3	C164	2404-001229	C-TA,CHIP;4.7uF,20%,25V,GP,TP,3528	
...3	C165	2203-000218	C-CERAMIC,CHIP;100nF,20%,50V,Y5V,TP,2012	
...3	C166	2203-000218	C-CERAMIC,CHIP;100nF,20%,50V,Y5V,TP,2012	
...3	C167	2404-000123	C-TA,CHIP;10uF,20%,16V,-,TP,6032,2.9mm	
...3	C168	2203-000218	C-CERAMIC,CHIP;100nF,20%,50V,Y5V,TP,2012	
...3	C169	2203-000218	C-CERAMIC,CHIP;100nF,20%,50V,Y5V,TP,2012	
...3	C170	2203-000218	C-CERAMIC,CHIP;100nF,20%,50V,Y5V,TP,2012	
...3	C171	2404-001098	C-TA,CHIP;1uF,20%,25V,GP,TP,3216,-	
...3	C172	2404-000256	C-TA,CHIP;47UF,20%,16V,GP,TP,7343	
...3	C173	2404-000256	C-TA,CHIP;47UF,20%,16V,GP,TP,7343	
...3	C174	2404-000256	C-TA,CHIP;47UF,20%,16V,GP,TP,7343	
...3	C201	2203-000408	C-CERAMIC,CHIP;0.18nF,5%,50V,NP0,TP,2012	
...3	C202	2203-000408	C-CERAMIC,CHIP;0.18nF,5%,50V,NP0,TP,2012	
...3	C203	2203-000408	C-CERAMIC,CHIP;0.18nF,5%,50V,NP0,TP,2012	

Level	Loc. No.	Code No.	Description ; Specification	Remark
...3	C204	2203-000408	C-CERAMIC,CHIP;0.18nF,5%,50V,NP0,TP,2012	
...3	C205	2203-000408	C-CERAMIC,CHIP;0.18nF,5%,50V,NP0,TP,2012	
...3	C206	2203-000408	C-CERAMIC,CHIP;0.18nF,5%,50V,NP0,TP,2012	
...3	D101	0401-000160	DIODE-SWITCHING;ISS314,30V,100mA,USC,TP	
...3	D102	0401-000160	DIODE-SWITCHING;ISS314,30V,100mA,USC,TP	
...3	DZ101	0403-001016	DIODE-ZENER;RLZ6.2B,6.2V,5.96-6.27V,400m	
...3	DZ102	0403-001016	DIODE-ZENER;RLZ6.2B,6.2V,5.96-6.27V,400m	
...3	DZ104	0403-001016	DIODE-ZENER;RLZ6.2B,6.2V,5.96-6.27V,400m	
...3	DZ105	0403-001016	DIODE-ZENER;RLZ6.2B,6.2V,5.96-6.27V,400m	
...3	DZ106	0403-001016	DIODE-ZENER;RLZ6.2B,6.2V,5.96-6.27V,400m	
...3	DZ107	0403-001016	DIODE-ZENER;RLZ6.2B,6.2V,5.96-6.27V,400m	
...3	DZ108	0403-001016	DIODE-ZENER;RLZ6.2B,6.2V,5.96-6.27V,400m	
...3	DZ109	0403-001016	DIODE-ZENER;RLZ6.2B,6.2V,5.96-6.27V,400m	
...3	DZ110	0403-001016	DIODE-ZENER;RLZ6.2B,6.2V,5.96-6.27V,400m	
...3	DZ111	0403-001016	DIODE-ZENER;RLZ6.2B,6.2V,5.96-6.27V,400m	
...3	DZ112	0403-001016	DIODE-ZENER;RLZ6.2B,6.2V,5.96-6.27V,400m	
...3	DZ113	0403-001016	DIODE-ZENER;RLZ6.2B,6.2V,5.96-6.27V,400m	
...3	DZ114	0403-001016	DIODE-ZENER;RLZ6.2B,6.2V,5.96-6.27V,400m	
...3	DZ115	0403-001016	DIODE-ZENER;RLZ6.2B,6.2V,5.96-6.27V,400m	
...3	DZ116	0403-001016	DIODE-ZENER;RLZ6.2B,6.2V,5.96-6.27V,400m	
...3	DZ117	0403-001284	DIODE-ZENER;RLZ3.3A,3.16-3.38V,500MW,LL-	
...3	EF101	2901-000229	FILTER-EMI SMD;50V,0.3A,-,22000pF,4.5x3.	
...3	EF102	2901-000229	FILTER-EMI SMD;50V,0.3A,-,22000pF,4.5x3.	
...3	EF104	2901-000226	FILTER-EMI SMD;25V,0.3A,-,100pF,3.2x1.25	
...3	EF105	2901-000226	FILTER-EMI SMD;25V,0.3A,-,100pF,3.2x1.25	
...3	EF106	2901-000226	FILTER-EMI SMD;25V,0.3A,-,100pF,3.2x1.25	
...3	EF107	2901-000226	FILTER-EMI SMD;25V,0.3A,-,100pF,3.2x1.25	
...3	EF108	2901-000226	FILTER-EMI SMD;25V,0.3A,-,100pF,3.2x1.25	
...3	EF109	2901-000226	FILTER-EMI SMD;25V,0.3A,-,100pF,3.2x1.25	
...3	EF110	2901-000226	FILTER-EMI SMD;25V,0.3A,-,100pF,3.2x1.25	
...3	EF111	2901-000226	FILTER-EMI SMD;25V,0.3A,-,100pF,3.2x1.25	
...3	EF112	2901-000226	FILTER-EMI SMD;25V,0.3A,-,100pF,3.2x1.25	
...3	EF113	2901-000226	FILTER-EMI SMD;25V,0.3A,-,100pF,3.2x1.25	
...3	EF114	2901-000226	FILTER-EMI SMD;25V,0.3A,-,100pF,3.2x1.25	
...3	EF115	2901-000226	FILTER-EMI SMD;25V,0.3A,-,100pF,3.2x1.25	
...3	EF116	2901-000226	FILTER-EMI SMD;25V,0.3A,-,100pF,3.2x1.25	
⚠ ...3	IC101	AA13-00071A	IC-ASIC;-,SDC91,QFP,208P,CONV CONTROLL	
⚠ ...3	IC102	0801-001043	IC-CMOS LOGIC;74HC4046,PHASE-LOCKED-LOOP	
⚠ ...3	IC103	AA09-00032A	IC-MCU;TSC87251G2D-OTP,TSC87251G2D-OT	
⚠ ...3	IC104	1103-001167	IC-EEPROM;28C64,8KX8BIT,TSOP,28P,-,120NS	
⚠ ...3	IC105	1201-001520	IC-VIDEO AMP;2210,SOP,8P,150MIL,DUAL,7dB	
⚠ ...3	IC106	1201-001504	IC-OP AMP;072,SOP,8P,150MIL,DUAL,-,PLAST	
⚠ ...3	IC107	1201-001504	IC-OP AMP;072,SOP,8P,150MIL,DUAL,-,PLAST	
⚠ ...3	IC108	1201-001504	IC-OP AMP;072,SOP,8P,150MIL,DUAL,-,PLAST	
⚠ ...3	IC109	0801-001156	IC-CMOS LOGIC;74HC4066,BILATERAL SWITCH,	
⚠ ...3	IC110	0801-001156	IC-CMOS LOGIC;74HC4066,BILATERAL SWITCH,	
⚠ ...3	IC111	1001-000105	IC-ANALOG SWITCH;CD4066BM,BILATERAL CMOS	
⚠ ...3	IC112	1001-000105	IC-ANALOG SWITCH;CD4066BM,BILATERAL CMOS	
...3	PCB	AA41-00188D	PCB-CONVERGENCE MODULE;SVP-43J4M,FR-4,4L	S.N.A
...3	Q101	0501-000280	TR-SMALL SIGNAL;KSA1182,PNP,150mW,SOT-23	
...3	Q102	0501-000342	TR-SMALL SIGNAL;KSC1623-Y,NPN,200mW,SOT-	
...3	Q103	0501-000342	TR-SMALL SIGNAL;KSC1623-Y,NPN,200mW,SOT-	
...3	Q104	0501-000280	TR-SMALL SIGNAL;KSA1182,PNP,150mW,SOT-23	
...3	Q105	0501-000342	TR-SMALL SIGNAL;KSC1623-Y,NPN,200mW,SOT-	
...3	Q106	0501-000342	TR-SMALL SIGNAL;KSC1623-Y,NPN,200mW,SOT-	
...3	Q107	0501-000342	TR-SMALL SIGNAL;KSC1623-Y,NPN,200mW,SOT-	
...3	Q108	0501-000280	TR-SMALL SIGNAL;KSA1182,PNP,150mW,SOT-23	
...3	Q109	0505-000257	FET-SILICON;2SK217,N,-,20mA,-,150mW,SOT-	S.N.A
...3	Q110	0505-000257	FET-SILICON;2SK217,N,-,20mA,-,150mW,SOT-	S.N.A
...3	Q111	0505-000257	FET-SILICON;2SK217,N,-,20mA,-,150mW,SOT-	S.N.A
...3	Q112	0505-000257	FET-SILICON;2SK217,N,-,20mA,-,150mW,SOT-	S.N.A
...3	Q113	0505-000257	FET-SILICON;2SK217,N,-,20mA,-,150mW,SOT-	S.N.A
...3	Q114	0505-000257	FET-SILICON;2SK217,N,-,20mA,-,150mW,SOT-	S.N.A
...3	R101	2007-000881	R-CHIP;4.7OHM,5%,1/10W,DA,TP,2012	
...3	R102	2007-000881	R-CHIP;4.7OHM,5%,1/10W,DA,TP,2012	
...3	R103	2007-000881	R-CHIP;4.7OHM,5%,1/10W,DA,TP,2012	
...3	R104	2007-000881	R-CHIP;4.7OHM,5%,1/10W,DA,TP,2012	
...3	R105	2007-000415	R-CHIP;15OHM,5%,1/10W,DA,TP,2012	
...3	R106	2007-000947	R-CHIP;47OHM,5%,1/10W,DA,TP,2012	
...3	R107	2007-000282	R-CHIP;100KOHM,5%,1/10W,DA,TP,2012	
...3	R108	2007-000872	R-CHIP;4.7KOHM,5%,1/10W,DA,TP,2012	
...3	R109	2007-000493	R-CHIP;2.2KOHM,5%,1/10W,DA,TP,2012	
...3	R110	2007-000221	R-CHIP;1.2KOHM,5%,1/10W,DA,TP,2012	
...3	R111	2007-000380	R-CHIP;13KOHM,5%,1/10W,DA,TP,2012	
...3	R112	2007-000468	R-CHIP;1KOHM,5%,1/10W,DA,TP,2012	
...3	R113	2007-001097	R-CHIP;62KOHM,5%,1/10W,DA,TP,2012	

Level	Loc. No.	Code No.	Description ; Specification	Remark
...3	R114	2007-000468	R-CHIP;1KOHM,5%,1/10W,DA,TP,2012	
...3	R116	2007-000468	R-CHIP;1KOHM,5%,1/10W,DA,TP,2012	
...3	R117	2007-000468	R-CHIP;1KOHM,5%,1/10W,DA,TP,2012	
...3	R118	2007-000468	R-CHIP;1KOHM,5%,1/10W,DA,TP,2012	
...3	R119	2007-000468	R-CHIP;1KOHM,5%,1/10W,DA,TP,2012	
...3	R120	2007-000401	R-CHIP;150OHM,5%,1/10W,DA,TP,2012	
...3	R121	2007-000023	R-CHIP;120OHM,5%,1/10W,DA,TP,2012	
...3	R122	2007-000468	R-CHIP;1KOHM,5%,1/10W,DA,TP,2012	
...3	R123	2007-000401	R-CHIP;150OHM,5%,1/10W,DA,TP,2012	
...3	R124	2007-000468	R-CHIP;1KOHM,5%,1/10W,DA,TP,2012	
...3	R125	2007-000401	R-CHIP;150OHM,5%,1/10W,DA,TP,2012	
...3	R126	2007-000401	R-CHIP;150OHM,5%,1/10W,DA,TP,2012	
...3	R127	2007-000401	R-CHIP;150OHM,5%,1/10W,DA,TP,2012	
...3	R128	2007-000290	R-CHIP;100OHM,5%,1/10W,DA,TP,2012	
...3	R129	2007-000465	R-CHIP;1KOHM,1%,1/10W,DA,TP,2012	
...3	R130	2007-000868	R-CHIP;4.7KOHM,1%,1/10W,DA,TP,2012	
...3	R131	2007-000981	R-CHIP;5.6KOHM,5%,1/10W,DA,TP,2012	
...3	R132	2007-000465	R-CHIP;1KOHM,1%,1/10W,DA,TP,2012	
...3	R133	2007-000868	R-CHIP;4.7KOHM,1%,1/10W,DA,TP,2012	
...3	R134	2007-000981	R-CHIP;5.6KOHM,5%,1/10W,DA,TP,2012	
...3	R135	2007-000290	R-CHIP;100OHM,5%,1/10W,DA,TP,2012	
...3	R136	2007-000290	R-CHIP;100OHM,5%,1/10W,DA,TP,2012	
...3	R137	2007-000465	R-CHIP;1KOHM,1%,1/10W,DA,TP,2012	
...3	R138	2007-000868	R-CHIP;4.7KOHM,1%,1/10W,DA,TP,2012	
...3	R139	2007-000981	R-CHIP;5.6KOHM,5%,1/10W,DA,TP,2012	
...3	R140	2007-000465	R-CHIP;1KOHM,1%,1/10W,DA,TP,2012	
...3	R141	2007-000868	R-CHIP;4.7KOHM,1%,1/10W,DA,TP,2012	
...3	R142	2007-000981	R-CHIP;5.6KOHM,5%,1/10W,DA,TP,2012	
...3	R143	2007-000290	R-CHIP;100OHM,5%,1/10W,DA,TP,2012	
...3	R144	2007-000290	R-CHIP;100OHM,5%,1/10W,DA,TP,2012	
...3	R145	2007-000465	R-CHIP;1KOHM,1%,1/10W,DA,TP,2012	
...3	R146	2007-000868	R-CHIP;4.7KOHM,1%,1/10W,DA,TP,2012	
...3	R147	2007-000981	R-CHIP;5.6KOHM,5%,1/10W,DA,TP,2012	
...3	R148	2007-000465	R-CHIP;1KOHM,1%,1/10W,DA,TP,2012	
...3	R149	2007-000868	R-CHIP;4.7KOHM,1%,1/10W,DA,TP,2012	
...3	R150	2007-000981	R-CHIP;5.6KOHM,5%,1/10W,DA,TP,2012	
...3	R151	2007-000290	R-CHIP;100OHM,5%,1/10W,DA,TP,2012	
...3	R152	2007-000282	R-CHIP;100KOHM,5%,1/10W,DA,TP,2012	
...3	R153	2007-000872	R-CHIP;4.7KOHM,5%,1/10W,DA,TP,2012	
...3	R154	2007-000774	R-CHIP;33KOHM,5%,1/10W,DA,TP,2012	
...3	R155	2007-000300	R-CHIP;10KOHM,5%,1/10W,DA,TP,2012	
...3	R156	2007-001055	R-CHIP;6.2KOHM,5%,1/10W,DA,TP,2012	
...3	R157	2007-000671	R-CHIP;2KOHM,5%,1/10W,DA,TP,2012	
...3	R158	2007-000468	R-CHIP;1KOHM,5%,1/10W,DA,TP,2012	
...3	R159	2007-001166	R-CHIP;75OHM,5%,1/10W,DA,TP,2012	
...3	R160	2007-000766	R-CHIP;330OHM,5%,1/10W,DA,TP,2012	
...3	R161	2007-000290	R-CHIP;100OHM,5%,1/10W,DA,TP,2012	
...3	R162	2007-000290	R-CHIP;100OHM,5%,1/10W,DA,TP,2012	
...3	R163	2007-000290	R-CHIP;100OHM,5%,1/10W,DA,TP,2012	
...3	R164	2007-000468	R-CHIP;1KOHM,5%,1/10W,DA,TP,2012	
...3	R165	2007-000468	R-CHIP;1KOHM,5%,1/10W,DA,TP,2012	
...3	R166	2007-000468	R-CHIP;1KOHM,5%,1/10W,DA,TP,2012	
...3	R167	2007-000468	R-CHIP;1KOHM,5%,1/10W,DA,TP,2012	
...3	R168	2007-000468	R-CHIP;1KOHM,5%,1/10W,DA,TP,2012	
...3	R169	2007-000703	R-CHIP;3.6KOHM,5%,1/10W,DA,TP,2012	
...3	R170	2007-000468	R-CHIP;1KOHM,5%,1/10W,DA,TP,2012	
...3	R171	2007-000221	R-CHIP;1.2KOHM,5%,1/10W,DA,TP,2012	
...3	R172	2007-000642	R-CHIP;270OHM,5%,1/10W,DA,TP,2012	
...3	R173	2007-000030	R-CHIP;560OHM,5%,1/10W,DA,TP,2012	
...3	R174	2007-000030	R-CHIP;560OHM,5%,1/10W,DA,TP,2012	
...3	R175	2007-000282	R-CHIP;100KOHM,5%,1/10W,DA,TP,2012	
...3	R176	2007-000872	R-CHIP;4.7KOHM,5%,1/10W,DA,TP,2012	
...3	R177	2007-000872	R-CHIP;4.7KOHM,5%,1/10W,DA,TP,2012	
...3	R178	2007-000728	R-CHIP;300OHM,5%,1/10W,DA,TP,2012	
...3	R179	2007-000728	R-CHIP;300OHM,5%,1/10W,DA,TP,2012	
...3	R180	2007-000728	R-CHIP;300OHM,5%,1/10W,DA,TP,2012	
...3	R181	2007-000728	R-CHIP;300OHM,5%,1/10W,DA,TP,2012	
...3	R182	2007-000728	R-CHIP;300OHM,5%,1/10W,DA,TP,2012	
...3	R183	2007-000728	R-CHIP;300OHM,5%,1/10W,DA,TP,2012	
...3	R184	2007-000830	R-CHIP;39KOHM,5%,1/10W,DA,TP,2012	
...3	R201	2007-000029	R-CHIP;0OHM,5%,1/10W,DA,TP,2012	
...3	R203	2007-000565	R-CHIP;220KOHM,5%,1/10W,DA,TP,2012	
...3	R204	2007-000565	R-CHIP;220KOHM,5%,1/10W,DA,TP,2012	
...3	R205	2007-000565	R-CHIP;220KOHM,5%,1/10W,DA,TP,2012	
...3	R206	2007-000565	R-CHIP;220KOHM,5%,1/10W,DA,TP,2012	
...3	R207	2007-000565	R-CHIP;220KOHM,5%,1/10W,DA,TP,2012	
...3	R208	2007-000565	R-CHIP;220KOHM,5%,1/10W,DA,TP,2012	

Level	Loc. No.	Code No.	Description ; Specification	Remark
...3	X101	2801-003860	CRYSTAL-SMD;24MHz,30ppm,28-ABV,20pF,50oh	

ASSY-PCB,TERMINAL

Level	Loc. No.	Code No.	Description ; Specification	Remark
1	*	AA95-00219D	ASSY-PCB,TERMINAL;-,SP43J5HF,J51A,-,-,1	
..2	CNT01	3711-003630	CONNECTOR-HEADER;BOX,32P,2R,2.54mm,ANGLE	
..2	CNT02	3711-003630	CONNECTOR-HEADER;BOX,32P,2R,2.54mm,ANGLE	
..2	CNT03	3711-003601	CONNECTOR-HEADER;BOX,12P,1R,2.5mm,ANGLE,	
⚠ ..2	IC703	0904-001121	IC-I/O SUPPORT CHIP;8574,8BIT,DIP,16P,30	
⚠ ..2	IC704	1001-001022	IC-ANALOG SWITCH;TDA8601,BLANKING,DIP,16	
⚠ ..2	IC705	0801-000213	IC-CMOS LOGIC;4052,MULTIPLEXER,DIP,16P,3	
..2	JKV01	3722-000498	JACK-SCART,21P,-,SN,BLK,NO	
..2	JKV02	3722-001039	JACK-RCA;9P,3.4mm,SN,BLK,#16-22	
..2	JKV03	3722-001382	JACK-RCA;5P(9P),3.4MM,NI,R/W/G/BLUE,-	
..2	JKV04	3722-001350	JACK-RCA;7P/9P,3.4MM,NI,BLK,-	
..2	JKV05	3701-001013	CONNECTOR-DSUB;15P,3R,FEMALE,STRAIGHT,AU	
..2	JKV06	3701-001013	CONNECTOR-DSUB;15P,3R,FEMALE,STRAIGHT,AU	
..2	JKV07	3722-000544	JACK-VHS;4P,11.5mm,AG,BLK,N	
..2	RN701	2011-000160	R-NETWORK;10Kohm,5%,1/8W,A,SIP,9P,TP	
..2		AA65-30105A	CLAMP-WIRE;NYLON 66,V2,NTR,15MM,ALL MODE	S.N.A
..2		AA99-20079E	ASSY-PCB SUB,AUTO; AA95-00219D ,V	S.N.A
...3	C701	2401-002009	C-AL;100uF,20%,16V,GP,TP,6.3x7,5	
...3	C702	2203-000218	C-CERAMIC,CHIP;100nF,20%,50V,Y5V,TP,2012	
...3	C703	2401-002009	C-AL;100uF,20%,16V,GP,TP,6.3x7,5	
...3	C704	2203-000818	C-CERAMIC,CHIP;0.033nF,5%,50V,NP0,TP,201	
...3	C705	2203-000818	C-CERAMIC,CHIP;0.033nF,5%,50V,NP0,TP,201	
...3	C706	2203-000979	C-CERAMIC,CHIP;47nF,10%,50V,X7R,TP,2012	
...3	C707	2203-000979	C-CERAMIC,CHIP;47nF,10%,50V,X7R,TP,2012	
...3	C708	2203-000979	C-CERAMIC,CHIP;47nF,10%,50V,X7R,TP,2012	
...3	C709	2203-000979	C-CERAMIC,CHIP;47nF,10%,50V,X7R,TP,2012	
...3	C710	2203-000979	C-CERAMIC,CHIP;47nF,10%,50V,X7R,TP,2012	
...3	C711	2203-000979	C-CERAMIC,CHIP;47nF,10%,50V,X7R,TP,2012	
...3	C712	2203-000218	C-CERAMIC,CHIP;100nF,20%,50V,Y5V,TP,2012	
...3	C713	2203-000979	C-CERAMIC,CHIP;47nF,10%,50V,X7R,TP,2012	
...3	C714	2203-000979	C-CERAMIC,CHIP;47nF,10%,50V,X7R,TP,2012	
...3	C715	2203-000979	C-CERAMIC,CHIP;47nF,10%,50V,X7R,TP,2012	
...3	C716	2401-002009	C-AL;100uF,20%,16V,GP,TP,6.3x7,5	
...3	C717	2203-000218	C-CERAMIC,CHIP;100nF,20%,50V,Y5V,TP,2012	
...3	C718	2203-000979	C-CERAMIC,CHIP;47nF,10%,50V,X7R,TP,2012	
...3	C719	2203-000979	C-CERAMIC,CHIP;47nF,10%,50V,X7R,TP,2012	
...3	C720	2203-000979	C-CERAMIC,CHIP;47nF,10%,50V,X7R,TP,2012	
...3	C721	2203-000979	C-CERAMIC,CHIP;47nF,10%,50V,X7R,TP,2012	
...3	C722	2203-000979	C-CERAMIC,CHIP;47nF,10%,50V,X7R,TP,2012	
...3	C723	2203-000218	C-CERAMIC,CHIP;100nF,20%,50V,Y5V,TP,2012	
...3	C724	2203-000979	C-CERAMIC,CHIP;47nF,10%,50V,X7R,TP,2012	
...3	C725	2203-000218	C-CERAMIC,CHIP;100nF,20%,50V,Y5V,TP,2012	
...3	C726	2203-000218	C-CERAMIC,CHIP;100nF,20%,50V,Y5V,TP,2012	
...3	C727	2203-000979	C-CERAMIC,CHIP;47nF,10%,50V,X7R,TP,2012	
...3	C730	2401-002299	C-AL;4.7uF,20%,50V,GP,TP,5x7,5	
...3	C731	2401-002299	C-AL;4.7uF,20%,50V,GP,TP,5x7,5	
...3	C732	2203-000444	C-CERAMIC,CHIP;1nF,10%,50V,X7R,TP,2012,-	
...3	C733	2203-000444	C-CERAMIC,CHIP;1nF,10%,50V,X7R,TP,2012,-	
...3	C734	2203-000444	C-CERAMIC,CHIP;1nF,10%,50V,X7R,TP,2012,-	
...3	C735	2203-000444	C-CERAMIC,CHIP;1nF,10%,50V,X7R,TP,2012,-	
...3	C736	2203-000444	C-CERAMIC,CHIP;1nF,10%,50V,X7R,TP,2012,-	
...3	C737	2203-000444	C-CERAMIC,CHIP;1nF,10%,50V,X7R,TP,2012,-	
...3	C740	2401-001840	C-AL;100uF,20%,16V,GP,TP,6.3x11,5	
...3	C741	2203-000218	C-CERAMIC,CHIP;100nF,20%,50V,Y5V,TP,2012	
...3	C742	2401-001840	C-AL;100uF,20%,16V,GP,TP,6.3x11,5	
...3	C743	2203-000218	C-CERAMIC,CHIP;100nF,20%,50V,Y5V,TP,2012	
...3	C744	2203-000575	C-CERAMIC,CHIP;220NF,10%,25V,X7R,TP,2012	
...3	C745	2203-000575	C-CERAMIC,CHIP;220NF,10%,25V,X7R,TP,2012	
...3	C746	2203-000575	C-CERAMIC,CHIP;220NF,10%,25V,X7R,TP,2012	
...3	C747	2203-000575	C-CERAMIC,CHIP;220NF,10%,25V,X7R,TP,2012	
...3	C748	2203-000575	C-CERAMIC,CHIP;220NF,10%,25V,X7R,TP,2012	
...3	C749	2203-000575	C-CERAMIC,CHIP;220NF,10%,25V,X7R,TP,2012	
...3	C760	2401-000667	C-AL;2.2uF,20%,50V,WT,TP,5x11,5	
...3	C761	2401-000667	C-AL;2.2uF,20%,50V,WT,TP,5x11,5	
...3	C762	2401-000667	C-AL;2.2uF,20%,50V,WT,TP,5x11,5	
...3	C763	2401-000667	C-AL;2.2uF,20%,50V,WT,TP,5x11,5	
...3	C764	2401-000667	C-AL;2.2uF,20%,50V,WT,TP,5x11,5	
...3	C765	2401-000667	C-AL;2.2uF,20%,50V,WT,TP,5x11,5	
...3	C766	2401-000667	C-AL;2.2uF,20%,50V,WT,TP,5x11,5	
...3	C767	2401-000667	C-AL;2.2uF,20%,50V,WT,TP,5x11,5	

Level	Loc. No.	Code No.	Description ; Specification	Remark
...3	C768	2203-000979	C-CERAMIC,CHIP;47nF,10%,50V,X7R,TP,2012	
...3	C769	2203-000979	C-CERAMIC,CHIP;47nF,10%,50V,X7R,TP,2012	
...3	C770	2203-000683	C-CERAMIC,CHIP;0.027nF,5%,50V,NP0,TP,201	
...3	C771	2203-000683	C-CERAMIC,CHIP;0.027nF,5%,50V,NP0,TP,201	
...3	C772	2203-000683	C-CERAMIC,CHIP;0.027nF,5%,50V,NP0,TP,201	
...3	C773	2203-000239	C-CERAMIC,CHIP;0.1nF,5%,50V,NP0,TP,2012	
...3	C774	2203-000239	C-CERAMIC,CHIP;0.1nF,5%,50V,NP0,TP,2012	
...3	C775	2203-000444	C-CERAMIC,CHIP;1nF,10%,50V,X7R,TP,2012,-	
...3	C776	2203-000444	C-CERAMIC,CHIP;1nF,10%,50V,X7R,TP,2012,-	
...3	C777	2401-001496	C-AL;47uF,20%,16V,GP,TP,5x7,5	
...3	C780	2401-000360	C-AL;100uF,20%,50V,GP,TP,8x11.5,5	
...3	C782	2401-000471	C-AL;10uF,20%,50V,BP,TP,5x11,5mm	
...3	C783	2401-000471	C-AL;10uF,20%,50V,BP,TP,5x11,5mm	
...3	DZ701	0403-000314	DIODE-ZENER;RLZJ9.1B,9.1V,8.80-9.30V,400	
...3	DZ702	0403-000314	DIODE-ZENER;RLZJ9.1B,9.1V,8.80-9.30V,400	
...3	DZ703	0403-000314	DIODE-ZENER;RLZJ9.1B,9.1V,8.80-9.30V,400	
...3	DZ704	0403-001117	DIODE-ZENER;RLZ12B,5%,500mW,LL-34,TP	
...3	DZ705	0403-000620	DIODE-ZENER;RLZ5.6B,5.6V,5.45-5.73V,400m	
⚠ ...3	IC701	1001-001030	IC-VIDEO SWITCH;TDA6920X,-,SOP,28P,300MI	
⚠ ...3	IC702	1001-001030	IC-VIDEO SWITCH;TDA6920X,-,SOP,28P,300MI	
...3	J701	2007-000029	R-CHIP;0OHM,5%,1/10W,DA,TP,2012	
...3	J702	2007-000029	R-CHIP;0OHM,5%,1/10W,DA,TP,2012	
...3	L701	2702-001094	INDUCTOR-RADIAL;10uH,10%,6x4mm	
...3	L702	2702-001094	INDUCTOR-RADIAL;10uH,10%,6x4mm	
...3	L703	2702-001094	INDUCTOR-RADIAL;10uH,10%,6x4mm	
...3	L704	2702-001094	INDUCTOR-RADIAL;10uH,10%,6x4mm	
...3	L705	2702-001094	INDUCTOR-RADIAL;10uH,10%,6x4mm	
...3	L706	2702-001094	INDUCTOR-RADIAL;10uH,10%,6x4mm	
...3	L707	2702-001094	INDUCTOR-RADIAL;10uH,10%,6x4mm	
...3	L708	2702-001094	INDUCTOR-RADIAL;10uH,10%,6x4mm	
...3	L709	2702-001094	INDUCTOR-RADIAL;10uH,10%,6x4mm	
...3	L710	2702-001094	INDUCTOR-RADIAL;10uH,10%,6x4mm	
...3	L719	2702-001094	INDUCTOR-RADIAL;10uH,10%,6x4mm	
...3	L720	2702-001094	INDUCTOR-RADIAL;10uH,10%,6x4mm	
...3	L721	2702-001094	INDUCTOR-RADIAL;10uH,10%,6x4mm	
...3	L722	2702-001094	INDUCTOR-RADIAL;10uH,10%,6x4mm	
...3	L723	2702-001094	INDUCTOR-RADIAL;10uH,10%,6x4mm	
...3	L724	2702-001094	INDUCTOR-RADIAL;10uH,10%,6x4mm	
...3	L725	2702-001094	INDUCTOR-RADIAL;10uH,10%,6x4mm	
...3	L726	2702-001094	INDUCTOR-RADIAL;10uH,10%,6x4mm	
...3	PCB	AA41-00076B	PCB-AV TERMINAL;SP43J5HF,FR-4,2L,B,1.6T,	S.N.A
...3	Q701	0501-000727	TR-SMALL SIGNAL;BC848C,NPN,310mW,SOT-23,	
...3	Q702	0501-000727	TR-SMALL SIGNAL;BC848C,NPN,310mW,SOT-23,	
...3	Q703	0501-000727	TR-SMALL SIGNAL;BC848C,NPN,310mW,SOT-23,	
...3	Q704	0501-000727	TR-SMALL SIGNAL;BC848C,NPN,310mW,SOT-23,	
...3	Q705	0501-000727	TR-SMALL SIGNAL;BC848C,NPN,310mW,SOT-23,	
...3	Q706	0501-000727	TR-SMALL SIGNAL;BC848C,NPN,310mW,SOT-23,	
...3	Q707	0501-000727	TR-SMALL SIGNAL;BC848C,NPN,310mW,SOT-23,	
...3	Q708	0501-000727	TR-SMALL SIGNAL;BC848C,NPN,310mW,SOT-23,	
...3	Q709	0501-000727	TR-SMALL SIGNAL;BC848C,NPN,310mW,SOT-23,	
...3	Q710	0501-000727	TR-SMALL SIGNAL;BC848C,NPN,310mW,SOT-23,	
...3	Q711	0501-000727	TR-SMALL SIGNAL;BC848C,NPN,310mW,SOT-23,	
...3	Q712	0501-000727	TR-SMALL SIGNAL;BC848C,NPN,310mW,SOT-23,	
...3	Q713	0501-000727	TR-SMALL SIGNAL;BC848C,NPN,310mW,SOT-23,	
...3	R701	2007-000290	R-CHIP;100OHM,5%,1/10W,DA,TP,2012	
...3	R702	2007-000300	R-CHIP;10KOHM,5%,1/10W,DA,TP,2012	
...3	R703	2007-000468	R-CHIP;1KOHM,5%,1/10W,DA,TP,2012	
...3	R704	2007-000511	R-CHIP;2.4KOHM,5%,1/10W,DA,TP,2012	
...3	R705	2007-001166	R-CHIP;75OHM,5%,1/10W,DA,TP,2012	
...3	R706	2007-001166	R-CHIP;75OHM,5%,1/10W,DA,TP,2012	
...3	R708	2007-000290	R-CHIP;100OHM,5%,1/10W,DA,TP,2012	
...3	R709	2007-000290	R-CHIP;100OHM,5%,1/10W,DA,TP,2012	
...3	R710	2007-000290	R-CHIP;100OHM,5%,1/10W,DA,TP,2012	
...3	R711	2007-001166	R-CHIP;75OHM,5%,1/10W,DA,TP,2012	
...3	R712	2007-000290	R-CHIP;100OHM,5%,1/10W,DA,TP,2012	
...3	R713	2007-000290	R-CHIP;100OHM,5%,1/10W,DA,TP,2012	
...3	R714	2007-000290	R-CHIP;100OHM,5%,1/10W,DA,TP,2012	
...3	R715	2007-000290	R-CHIP;100OHM,5%,1/10W,DA,TP,2012	
...3	R716	2007-000300	R-CHIP;10KOHM,5%,1/10W,DA,TP,2012	
...3	R717	2007-000401	R-CHIP;150OHM,5%,1/10W,DA,TP,2012	
...3	R718	2007-000300	R-CHIP;10KOHM,5%,1/10W,DA,TP,2012	
...3	R719	2007-000468	R-CHIP;1KOHM,5%,1/10W,DA,TP,2012	
...3	R720	2007-000511	R-CHIP;2.4KOHM,5%,1/10W,DA,TP,2012	
...3	R721	2007-000290	R-CHIP;100OHM,5%,1/10W,DA,TP,2012	
...3	R722	2007-001166	R-CHIP;75OHM,5%,1/10W,DA,TP,2012	
...3	R723	2007-000290	R-CHIP;100OHM,5%,1/10W,DA,TP,2012	
...3	R724	2007-000290	R-CHIP;100OHM,5%,1/10W,DA,TP,2012	
...3	R725	2007-001166	R-CHIP;75OHM,5%,1/10W,DA,TP,2012	
...3	R726	2007-001166	R-CHIP;75OHM,5%,1/10W,DA,TP,2012	
...3	R727	2007-001166	R-CHIP;75OHM,5%,1/10W,DA,TP,2012	
...3	R728	2007-001166	R-CHIP;75OHM,5%,1/10W,DA,TP,2012	
...3	R729	2007-001166	R-CHIP;75OHM,5%,1/10W,DA,TP,2012	
...3	R730	2007-000282	R-CHIP;100KOHM,5%,1/10W,DA,TP,2012	
...3	R731	2007-000282	R-CHIP;100KOHM,5%,1/10W,DA,TP,2012	
...3	R732	2007-000282	R-CHIP;100KOHM,5%,1/10W,DA,TP,2012	
...3	R733	2007-000282	R-CHIP;100KOHM,5%,1/10W,DA,TP,2012	
...3	R734	2007-000941	R-CHIP;47KOHM,5%,1/10W,DA,TP,2012	
...3	R735	2007-000941	R-CHIP;47KOHM,5%,1/10W,DA,TP,2012	
...3	R736	2007-001166	R-CHIP;75OHM,5%,1/10W,DA,TP,2012	
...3	R737	2007-000766	R-CHIP;330OHM,5%,1/10W,DA,TP,2012	
...3	R740	2007-000468	R-CHIP;1KOHM,5%,1/10W,DA,TP,2012	
...3	R741	2007-000468	R-CHIP;1KOHM,5%,1/10W,DA,TP,2012	
...3	R742	2007-000468	R-CHIP;1KOHM,5%,1/10W,DA,TP,2012	
...3	R743	2007-000468	R-CHIP;1KOHM,5%,1/10W,DA,TP,2012	
...3	R744	2007-000468	R-CHIP;1KOHM,5%,1/10W,DA,TP,2012	
...3	R745	2007-000468	R-CHIP;1KOHM,5%,1/10W,DA,TP,2012	
...3	R746	2007-000468	R-CHIP;1KOHM,5%,1/10W,DA,TP,2012	
...3	R748	2007-000872	R-CHIP;4.7KOHM,5%,1/10W,DA,TP,2012	
...3	R749	2007-000029	R-CHIP;0OHM,5%,1/10W,DA,TP,2012	
...3	R750	2007-000572	R-CHIP;220OHM,5%,1/10W,DA,TP,2012	
...3	R751	2007-000029	R-CHIP;0OHM,5%,1/10W,DA,TP,2012	
...3	R752	2007-000572	R-CHIP;220OHM,5%,1/10W,DA,TP,2012	
...3	R753	2007-000029	R-CHIP;0OHM,5%,1/10W,DA,TP,2012	
...3	R754	2007-000572	R-CHIP;220OHM,5%,1/10W,DA,TP,2012	
...3	R755	2007-000029	R-CHIP;0OHM,5%,1/10W,DA,TP,2012	
...3	R756	2007-000964	R-CHIP;5.1KOHM,5%,1/10W,DA,TP,2012	
...3	R757	2007-000468	R-CHIP;1KOHM,5%,1/10W,DA,TP,2012	
...3	R758	2007-000872	R-CHIP;4.7KOHM,5%,1/10W,DA,TP,2012	
...3	R759	2007-000872	R-CHIP;4.7KOHM,5%,1/10W,DA,TP,2012	
...3	R760	2007-000290	R-CHIP;100OHM,5%,1/10W,DA,TP,2012	
...3	R761	2007-000221	R-CHIP;1.2KOHM,5%,1/10W,DA,TP,2012	
...3	R762	2007-000290	R-CHIP;100OHM,5%,1/10W,DA,TP,2012	
...3	R763	2007-000290	R-CHIP;100OHM,5%,1/10W,DA,TP,2012	
...3	R764	2007-000221	R-CHIP;1.2KOHM,5%,1/10W,DA,TP,2012	
...3	R765	2007-000290	R-CHIP;100OHM,5%,1/10W,DA,TP,2012	
...3	R766	2007-000290	R-CHIP;100OHM,5%,1/10W,DA,TP,2012	
...3	R767	2007-000290	R-CHIP;100OHM,5%,1/10W,DA,TP,2012	
...3	R768	2007-000290	R-CHIP;100OHM,5%,1/10W,DA,TP,2012	
...3	R769	2007-000290	R-CHIP;100OHM,5%,1/10W,DA,TP,2012	
...3	R770	2007-000766	R-CHIP;330OHM,5%,1/10W,DA,TP,2012	
...3	R771	2007-001166	R-CHIP;75OHM,5%,1/10W,DA,TP,2012	
...3	R772	2007-001166	R-CHIP;75OHM,5%,1/10W,DA,TP,2012	
...3	R773	2007-001166	R-CHIP;75OHM,5%,1/10W,DA,TP,2012	
...3	R774	2007-001166	R-CHIP;75OHM,5%,1/10W,DA,TP,2012	
...3	R775	2007-001166	R-CHIP;75OHM,5%,1/10W,DA,TP,2012	
...3	R776	2007-001166	R-CHIP;75OHM,5%,1/10W,DA,TP,2012	
...3	R777	2007-000781	R-CHIP;33OHM,5%,1/10W,DA,TP,2012	
...3	R778	2007-000781	R-CHIP;33OHM,5%,1/10W,DA,TP,2012	
...3	R779	2007-001100	R-CHIP;62OHM,5%,1/10W,DA,TP,2012	
...3	R780	2007-001100	R-CHIP;62OHM,5%,1/10W,DA,TP,2012	
...3	R781	2007-001100	R-CHIP;62OHM,5%,1/10W,DA,TP,2012	
...3	R782	2007-000300	R-CHIP;10KOHM,5%,1/10W,DA,TP,2012	
...3	R783	2007-000300	R-CHIP;10KOHM,5%,1/10W,DA,TP,2012	
...3	R784	2007-000300	R-CHIP;10KOHM,5%,1/10W,DA,TP,2012	
...3	R785	2007-000872	R-CHIP;4.7KOHM,5%,1/10W,DA,TP,2012	
...3	R786	2007-000290	R-CHIP;100OHM,5%,1/10W,DA,TP,2012	
...3	R787	2007-000290	R-CHIP;100OHM,5%,1/10W,DA,TP,2012	
...3	R788	2007-000468	R-CHIP;1KOHM,5%,1/10W,DA,TP,2012	
...3	R791	2007-000290	R-CHIP;100OHM,5%,1/10W,DA,TP,2012	
...3	R792	2007-000290	R-CHIP;100OHM,5%,1/10W,DA,TP,2012	
...3	R793	2007-000290	R-CHIP;100OHM,5%,1/10W,DA,TP,2012	
...3	R794	2007-000290	R-CHIP;100OHM,5%,1/10W,DA,TP,2012	
...3	R795	2007-001155	R-CHIP;750OHM,5%,1/10W,DA,TP,2012	
...3	R796	2007-000282	R-CHIP;100KOHM,5%,1/10W,DA,TP,2012	
...3	R797	2007-001155	R-CHIP;750OHM,5%,1/10W,DA,TP,2012	
...3	R798	2007-000282	R-CHIP;100KOHM,5%,1/10W,DA,TP,2012	
...3	R799	2007-000468	R-CHIP;1KOHM,5%,1/10W,DA,TP,2012	
...3	R800	2007-001166	R-CHIP;75OHM,5%,1/10W,DA,TP,2012	
...3	R801	2007-001166	R-CHIP;75OHM,5%,1/10W,DA,TP,2012	
...3	R802	2007-001166	R-CHIP;75OHM,5%,1/10W,DA,TP,2012	
...3	R803	2007-000328	R-CHIP;11KOHM,5%,1/10W,DA,TP,2012	
...3	R804	2007-000328	R-CHIP;11KOHM,5%,1/10W,DA,TP,2012	

Level	Loc. No.	Code No.	Description ; Specification	Remark
...3	R805	2007-000001	R-CHIP;68KOHM,5%,1/10W,DA,TP,2012	
...3	R806	2007-000001	R-CHIP;68KOHM,5%,1/10W,DA,TP,2012	
...3	R807	2007-000001	R-CHIP;68KOHM,5%,1/10W,DA,TP,2012	
...3	R808	2007-000001	R-CHIP;68KOHM,5%,1/10W,DA,TP,2012	
...3	R809	2007-000001	R-CHIP;68KOHM,5%,1/10W,DA,TP,2012	
...3	R810	2007-000001	R-CHIP;68KOHM,5%,1/10W,DA,TP,2012	
...3	R811	2007-000001	R-CHIP;68KOHM,5%,1/10W,DA,TP,2012	
...3	R812	2007-000001	R-CHIP;68KOHM,5%,1/10W,DA,TP,2012	
...3	R813	2007-000300	R-CHIP;10KOHM,5%,1/10W,DA,TP,2012	
...3	R814	2007-000300	R-CHIP;10KOHM,5%,1/10W,DA,TP,2012	
...3	R815	2007-000300	R-CHIP;10KOHM,5%,1/10W,DA,TP,2012	
...3	R816	2007-000774	R-CHIP;33KOHM,5%,1/10W,DA,TP,2012	
...3	R817	2007-000615	R-CHIP;24KOHM,5%,1/10W,DA,TP,2012	
...3	R818	2007-000774	R-CHIP;33KOHM,5%,1/10W,DA,TP,2012	
...3	R819	2007-000615	R-CHIP;24KOHM,5%,1/10W,DA,TP,2012	
..2		0202-000187	SOLDER-WIRE FLUX;-,RS60S,D1.2,63Sn/37Pb	S.N.A
..2		0202-001004	SOLDER-CREAM;SQ-2030M SZH-1,S63A,D0.04,6	S.N.A

ASSY CABINET BOT

1	*	AA91-00167B	ASSY CABINET BOT;-,VO,JERSEY SP-200G SAM	
..2		AA60-00066A	SPACER-JERSEY;61J5,JERSEY,-,-,-,GRAY,-,-	S.N.A
..2		AA64-00673A	BADGE-BRAND;AL,SAMSUNG,-,L72,-,PJT,-	
..2		AA64-00285B	CABINET-FRONT,B;-,PCJ613R,JERSEY SP-200G	
..2		AA61-20295A	HOLDER-PIN;-,SPT555JHD,ABS,HB,BLK,-	S.N.A

ASSY TERMINAL BOARD

1	*	AA91-00158X	ASSY TERMINAL BOARD;-,HIPS,VO,BLK,J51A P	
..2		AA63-00045B	TERMINAL-BOARD,ANT;-,HIPS,-,PCJ533R,-	S.N.A
..2		AA64-00182X	INLAY BACK;SP53J5HF,J51A PAL,PS SHEET,T0	S.N.A

ASSY CHASSIS PART

1	*	AA90-00108D	ASSY CHASSIS PART;J51A E2,SP61J5HF	S.N.A
..2	CON+HC	6003-001023	SCREW-TAPTITE;RWH,+,B,M3,L10,ZPC(YEL),SW	S.N.A
..2	DF+FBT	6003-001023	SCREW-TAPTITE;RWH,+,B,M3,L10,ZPC(YEL),SW	S.N.A
..2	DF+HC	6003-001023	SCREW-TAPTITE;RWH,+,B,M3,L10,ZPC(YEL),SW	S.N.A
..2	PM+HC	6003-001023	SCREW-TAPTITE;RWH,+,B,M3,L10,ZPC(YEL),SW	S.N.A
..2	TBA+AV	6003-001026	SCREW-TAPTITE;RH,+,B,M4,L15,ZPC(BLK),SWR	S.N.A
..2	TBA+HC	6003-001023	SCREW-TAPTITE;RWH,+,B,M3,L10,ZPC(YEL),SW	S.N.A
..2	TBA+SC	6003-001026	SCREW-TAPTITE;RH,+,B,M4,L15,ZPC(BLK),SWR	S.N.A
..2		AA60-10011A	SCREW-TAPTITE;HH,+,PC,M4,L12,ZPC(BLK),SW	S.N.A
..2		AA61-00051B	HOLDER-CHASSIS;-,PCJ533R,ABS,VO,GRAY,E-2	S.N.A

ASSY CABINET

1	*	AA90-00107Y	ASSY CABINET;61J5,SP61J5HFX/RAD	S.N.A
..2	AC+BCM	AA60-10011A	SCREW-TAPTITE;HH,+,PC,M4,L12,ZPC(BLK),SW	S.N.A
..2	ADB+CM	6005-001003	SCREW-WOOD;HH,+,M4,L20,ZPC(BLK),SWRCH18A	S.N.A
..2	BCM+CM	6006-001090	SCREW-ASS'Y TAPP;WW,HEX,+,M6,L28.0,ZPC(Y	S.N.A
..2	CBT+CM	6005-001003	SCREW-WOOD;HH,+,M4,L20,ZPC(BLK),SWRCH18A	S.N.A
..2	CBW+CM	6005-001003	SCREW-WOOD;HH,+,M4,L20,ZPC(BLK),SWRCH18A	S.N.A
..2	CFW+CM	6005-001003	SCREW-WOOD;HH,+,M4,L20,ZPC(BLK),SWRCH18A	S.N.A
..2	CMW	6005-001003	SCREW-WOOD;HH,+,M4,L20,ZPC(BLK),SWRCH18A	S.N.A
..2	CMW+CM	6005-001001	SCREW-WOOD;TH,+,M4,L28,BLK,SWRCH18A	S.N.A
..2	CP+CM	6005-001003	SCREW-WOOD;HH,+,M4,L20,ZPC(BLK),SWRCH18A	S.N.A
..2	FP+BF	6003-001023	SCREW-TAPTITE;RWH,+,B,M3,L10,ZPC(YEL),SW	S.N.A
..2	HC+CBW	6005-001003	SCREW-WOOD;HH,+,M4,L20,ZPC(BLK),SWRCH18A	S.N.A
..2	HC+CM	6005-001003	SCREW-WOOD;HH,+,M4,L20,ZPC(BLK),SWRCH18A	S.N.A
..2	HS+CM	AA60-00021A	SCREW-WOOD;RH,+,M3.5,L22,ZPC(BLK),SWRCH1	S.N.A
..2	HV+BCM	AA60-10011A	SCREW-TAPTITE;HH,+,PC,M4,L12,ZPC(BLK),SW	S.N.A
..2	TBACBW	AA60-10011A	SCREW-TAPTITE;HH,+,PC,M4,L12,ZPC(BLK),SW	S.N.A
..2		AA26-30006E	TRANS-FLYBACK;-,FWZ-50A001B(S),50KV,-	
..2		AA69-30036A	BAG-PE;HDPE,T0.02,2000,1800,-,-,555J,	S.N.A
..2		AA91-00241A	ASSY-BRACKET,MAIN;-,-,SECC T1.6 7,53J5	

Level	Loc. No.	Code No.	Description ; Specification	Remark
...3	BMSBMM	AA60-10011A	SCREW-TAPTITE;HH,+,PC,M4,L12,ZPC(BLK),SW	S.N.A
...3		AA61-00152B	BRACKET-MAIN,M;-,7 PROJECTION,SECC,-,-,	
...3		AA61-00153B	BRACKET-MAIN,S;-,7 PROJECTION,SECC,-,-,	
..2		AA63-10007C	BAND-PP;-,-,-,W18,-,CLEAR,1G,-	S.N.A
..2		AA63-00332A	COVER-MIRROR,WOOD;61J5,PB,T12,-,-,ASSY,-	
...3		AA60-10051A	SCREW-WOOD;PH,+,M4,L16,ZPC(BLK),SWRCH18A	S.N.A
...3		AA61-00357C	HOLDER-MIRROR;-,PCJ612R,ABS,HB,BLK,L730	
...3		AA63-00333A	COVER-MIRROR,WOOD;61J5,PB,T12,-,-,-,-	
..2		AA61-20285A	HOLDER-BOX;-,3456,PP,VO,WHT,-	S.N.A
..2		AA61-00464G	HOLDER-SCREEN,16T;61J5,ABS,BLK,HB,-,L865	S.N.A
..2		AA61-00357B	HOLDER-MIRROR;-,PCJ612R,ABS,HB,BLK,L1170	S.N.A
..2		AA60-00034A	SPACER-COVER,DUST;SPONGE,T2.0,-,-,61J5,-	S.N.A
..2		AA67-70056A	SCREEN-TINT;0.515,61',DNP,896-985,TINT10	
..2		AA67-00022A	SUN-SCREEN;-,61,H/C,A/S,PMMA,T=82%,T2.0	
..2		AA67-00020A	MIRROR-BACK;613,GLASS,T3.0,-,-,1160*754*	
..2		AA65-30008A	CLAMP-CORD;PE,HB,BLK,-,-,-	S.N.A
..2		AA64-31213B	CABINET-BACK-TOP;-,555J,-,HIPS,HB,BLK,-,	
..2		AA64-00501B	CABINET-BACK,BOT;-,524J,NO-F.C.C,HIPS,VO	
..2		AA64-00398B	CABINET-FRONT,WOOD;-,61J5,-,MDF,-,-,T3,-	

ASSY-CRT-(B)

1	*	AA94-01289A	ASSY-CRT-(B);P16LNM07BMB,+380MG,7,BARE,	
..2		AA61-00057C	HOLDER-CAP;-,7 PROJECTION,PC,-,CLEAR,-	S.N.A
..2		AA39-00018A	LEAD CONNECTOR-ASSY;-,YFH800-01,YRH187RH	S.N.A
..2		AA67-10066A	LENS-ASSY;DELTA 37,-,-,CLEAR A/B,-,-,-	
..2		AA67-10007A	LENS;-,DELTA,CLEAR,PJT,-,77,79,-	
..2		AA91-00103C	ASSY-WIRE,CRT;-,-,7CRT,PROJECTION	S.N.A
...3		AA61-00053B	BRACKET-WIRE;-,PROJECTION,SECC-1,T1.6,-,	S.N.A
...3		AA61-00054B	BRACKET-EARTH;-,PROJECTION,PBS,-,-,-,-	S.N.A
...3		AA61-00055C	BRACKET-CRT,WIRE;-,PJT,SUS304 1/8H,-,-,-	S.N.A
⚠ ..2		AA26-30006F	TRANS-FLYBACK;-,FWZ-50A001C,55,30KV	
..2		AA63-00061B	SPACER-CAP;EPDM,-,BLK,-,PROJECTION,-	
..2		AA63-00060C	SPACER-CRT;SILICON,-,GRAY,7,PROJECTION,	S.N.A
..2		AA63-00091C	SPACER-CLENS;SILICON,-,GRAY,-,PROJECTION	S.N.A
..2		AA64-00208B	CASE-COUPLER,B;-,PROJECTION,7,ALDC,-,BL	S.N.A
⚠ ..2		AA27-50005C	DEFLECTION-YOKE;-,DPD-4392AL,43'/PJTCRT,	
⚠ ..2		AA03-10026W	CRT-MONO;-,P16LNM07BMB,-,7INCH,90deg,90	S.N.A
..2		AA27-60003C	MAGNET-CONVERGENCE;-,JH92LTU-SC-20,29.1m	
..2		AA63-60025A	SPACER-DY;NEOPRENE,-,BLK,V0,S4388,-	S.N.A
..2		AA63-00099A	SPACER-FELT;PJT,-,BLK,-,30X30	S.N.A
..2		AA63-00076A	SPACER-LENS;FELT ,T1.0,BROWN,7CRT,PROJE	S.N.A
..2		AA61-00056B	BRACKET-LENS;-,PROJECTION,SECC,T1.6,-,-,	S.N.A
..2		AA60-10011A	SCREW-TAPTITE;HH,+,PC,M4,L12,ZPC(BLK),SW	S.N.A

ASSY-CRT-(G)

1	*	AA94-01288A	ASSY-CRT-(G);P16LNM07HKA,+380MG,7,BARE,	
..2		AA61-00057C	HOLDER-CAP;-,7 PROJECTION,PC,-,CLEAR,-	S.N.A
..2		AA39-00018A	LEAD CONNECTOR-ASSY;-,YFH800-01,YRH187RH	S.N.A
..2		AA67-10071A	LENS;DELTA 77 79,-,GREEN,C ELEMENT,	
..2		AA67-10066A	LENS-ASSY;DELTA 37,-,-,CLEAR A/B,-,-,-	
..2		AA91-00103C	ASSY-WIRE,CRT;-,-,7CRT,PROJECTION	S.N.A
...3		AA61-00053B	BRACKET-WIRE;-,PROJECTION,SECC-1,T1.6,-,	S.N.A
...3		AA61-00054B	BRACKET-EARTH;-,PROJECTION,PBS,-,-,-,-	S.N.A
...3		AA61-00055C	BRACKET-CRT,WIRE;-,PJT,SUS304 1/8H,-,-,-	S.N.A
⚠ ..2		AA26-30006F	TRANS-FLYBACK;-,FWZ-50A001C,55,30KV	
..2		AA63-00061B	SPACER-CAP;EPDM,-,BLK,-,PROJECTION,-	
..2		AA63-00060C	SPACER-CRT;SILICON,-,GRAY,7,PROJECTION,	S.N.A
..2		AA63-00091C	SPACER-CLENS;SILICON,-,GRAY,-,PROJECTION	S.N.A
..2		AA64-00207B	CASE-COUPLER,G;-,PROJECTION,7,ALDC8,-,B	S.N.A
⚠ ..2		AA27-50005C	DEFLECTION-YOKE;-,DPD-4392AL,43'/PJTCRT,	
⚠ ..2		AA03-10026V	CRT-MONO;-,P16LNM07HKA,-,7INCH,90deg,90	S.N.A
..2		AA27-00003B	MAGNET-CONVERGENCE;-,JH92LT-029,29.1MM	
..2		AA63-60025A	SPACER-DY;NEOPRENE,-,BLK,V0,S4388,-	S.N.A
..2		AA63-00099A	SPACER-FELT;PJT,-,BLK,-,30X30	S.N.A
..2		AA63-00076A	SPACER-LENS;FELT ,T1.0,BROWN,7CRT,PROJE	S.N.A
..2		AA61-00056B	BRACKET-LENS;-,PROJECTION,SECC,T1.6,-,-,	S.N.A
..2		AA60-10011A	SCREW-TAPTITE;HH,+,PC,M4,L12,ZPC(BLK),SW	S.N.A

Level	Loc. No.	Code No.	Description ; Specification	Remark

ASSY-CRT-(R)

1	*	AA94-01287A	ASSY-CRT-(R);P16LNM07RJA,+380MG,7,BARE,	
..2		AA61-00057C	HOLDER-CAP;-,7 PROJECTION,PC,-,CLEAR,-	S.N.A
..2		AA67-10008A	LENS;-,DELTA,RED,PJT,-,77,79,-	
..2		AA39-00018A	LEAD CONNECTOR-ASSY;-,YFH800-01,YRH187RH	S.N.A
..2		AA67-10066A	LENS-ASSY;DELTA 37,-,-,CLEAR A/B,-,-,-	
..2		AA91-00103C	ASSY-WIRE,CRT;-,-,7CRT,PROJECTION	S.N.A
...3		AA61-00053B	BRACKET-WIRE;-,PROJECTION,SECC-1,T1.6,-,	S.N.A
...3		AA61-00054B	BRACKET-EARTH;-,PROJECTION,PBS,-,-,-,-	S.N.A
...3		AA61-00055C	BRACKET-CRT,WIRE;-,PJT,SUS304 1/8H,-,-,-	S.N.A
⚠ ..2		AA26-30006F	TRANS-FLYBACK;-,FWZ-50A001C,55,30KV	
..2		AA63-00061B	SPACER-CAP;EPDM,-,BLK,-,PROJECTION,-	
..2		AA63-00060C	SPACER-CRT;SILICON,-,GRAY,7,PROJECTION,	S.N.A
..2		AA63-00091C	SPACER-CLENS;SILICON,-,GRAY,-,PROJECTION	S.N.A
..2		AA64-00206B	CASE-COUPLER,R;-,PROJECTION,-,ALDC8,-,BL	S.N.A
⚠ ..2		AA27-50005C	DEFLECTION-YOKE;-,DPD-4392AL,43'/PJTCRT,	
⚠ ..2		AA03-10026U	CRT-MONO;-,P16LNM07RJA,-,7INCH,90deg,90	
..2		AA27-00003B	MAGNET-CONVERGENCE;-,JH92LT-029,29.1MM	
..2		AA63-60025A	SPACER-DY;NEOPRENE,-,BLK,V0,S4388,-	S.N.A
..2		AA63-00099A	SPACER-FELT;PJT,-,BLK,-,30X30	S.N.A
..2		AA63-00076A	SPACER-LENS;FELT ,T1.0,BROWN,7CRT,PROJE	S.N.A
..2		AA61-00056B	BRACKET-LENS;-,PROJECTION,SECC,T1.6,-,-	S.N.A
..2		AA60-10011A	SCREW-TAPTITE;HH,+,PC,M4,L12,ZPC(BLK),SW	S.N.A

ASSY-CABINET,MID

1	*	AA91-00439C	ASSY-CABINET,MID;-,WOOD,KBM21-58 NO-FERR	
..2	BF+CM	AA60-10051A	SCREW-WOOD;PH,+,M4,L16,ZPC(BLK),SWRCH18A	S.N.A
..2	CABMID	AA63-00105A	SPACER-FELT;FELT,T2.0,BLK,32X878,PCJ613R	S.N.A
..2	CABMID	AA61-00097A	HOLDER-WIRE;-,-,NYLON 6/6,-,NTR,-	S.N.A
..2	CABMID	AA60-10050X	SCREW-WOOD;FH,+,M3.5,L32,ZPC(YEL),SWRCH1	S.N.A
..2	CABMID	AA66-40010A	ROLLER-PAPER;PAPER,OD50,L80,T3,-,SPT-521	S.N.A
..2	CABMID	AA63-00105B	SPACER-FELT;FELT,T2.0,BLK,32X1211,PCJ613	S.N.A
..2	CABMID	3001-000176	SPEAKER;30W,8ohm,93dB,65Hz	
..2	CABMID	3001-000153	SPEAKER;20W,8ohm,93dB,1.3KHz	
..2	CAS+CM	AA60-10051A	SCREW-WOOD;PH,+,M4,L16,ZPC(BLK),SWRCH18A	S.N.A
..2	SPK	AA39-00042C	LEAD CONNECTOR-ASSY;,-,-,1.75uF,-,-,-,RE	
..2	SPK+CM	AA60-10051A	SCREW-WOOD;PH,+,M4,L16,ZPC(BLK),SWRCH18A	S.N.A
..2		AA63-00066C	SPACER-DUAL,LOCK;#250,-,-,11X20,-,-	S.N.A
..2		AA63-00193B	COVER-AIRVENT;-,533R,-,HIPS,VO,BLK,-,-	S.N.A
..2		AA63-60126A	SPACER-FELT;FELT,T2,BLK,1160X15,PRJT43,5	S.N.A
..2		AA63-60126D	SPACER-FELT;FELT,T2,-,400X15,PRJ61,-	S.N.A
..2		AA64-00740C	CABINET-LEG,FRONT;-,61J5,SV-704P,HIPS,HB	
..2		AA64-01272B	CABINET MIDDLE;61J5,KBM21-58 ,WOOD,-,-	
..2		AA39-20505P	LEAD CONNECTOR-ASSY;-,YSH025-04,REC,4P,1	
..2		AA61-00094B	HOLDER-RAIL;-,PCJ533R,ABS,HB,BLK,240	S.N.A
..2		AA61-00094C	HOLDER-RAIL;-,PCJ533R,ABS,HB,BLK,480	S.N.A
..2		AA61-00458B	CASTER;-,-,TP4020-05 PLY,OH56,-,-,SR4	S.N.A
..2		AA61-00464E	HOLDER-SCREEN,16T;61J5,ABS,BLK,HB,-,L117	S.N.A
..2		AA61-00464F	HOLDER-SCREEN,16T;61J5,ABS,BLK,HB,-,L865	S.N.A
..2		AA61-10247A	BRACKET-FOCUS;-,S46DS,SECC,T1.0,-,-,-	S.N.A
..2		AA61-10387A	BRACKET-GRILLE;-,SVP-462J,SECC-1,T0.5,-,	S.N.A
..2		AA61-20136A	HOLDER-MASK,PIN;-,S4388,NYLON,-,BLK,#066	S.N.A

ASSY CABINET MASK

1	*	AA91-00396F	ASSY CABINET MASK;-,HB,BLK,S704+B702 TAN	
..2		AA64-01165C	CABINET-MASK,SIDE;61J5,S704+B702,ABS,HB,	
...3		AA64-01165A	CABINET-MASK,SIDE;61J5,L941 APCHUL,ABS,H	S.N.A
..2		AA64-01162J	CABINET-MASK,TOP;61J5HF,S704+B702 TANTUS	S.N.A
...3		AA64-01162A	CABINET-MASK;61J5,L1251 APCHUL,ABS,HB,BL	S.N.A
..2		AA64-01162G	CABINET-MASK,BOT;61J5HF,S704+B702 DOLBY,	S.N.A
...3		AA64-01162A	CABINET-MASK;61J5,L1251 APCHUL,ABS,HB,BL	S.N.A
..2		AA63-00063A	SPACER-DUAL,LOCK;#400,-,-,19X19,SVP-614J	S.N.A
..2		AA61-00441B	HOLDER-CORNER;E2 ALL,ABS,BLK,HB,-,S704+B	S.N.A

Level	Loc. No.	Code No.	Description ; Specification	Remark

ASSY POWER CORD

1	*	AA96-20115F	ASSY POWER CORD;-,AP2/YES,H/C50mm,KJP170	
..2		3811-000401	WIRE-PVC CU;BCWA,300V,ROLL,17/0.16mm,#22	S.N.A
⚠ ..2		AA39-10005N	POWER-CORD;-,KKP-560A,KLCE-2F,2.59,3P,AU	S.N.A
..2		AA61-20284A	HOLDER;-,P-CORD,PP,VO,BLK,KE-002	S.N.A

ASSY ACCESSORY

1	*	AA94-02563A	ASSY ACCESSORY;SP53J5HFX/RAD,J51A,NEWZEA	S.N.A
..2		AA69-30009C	BAG-SHEET;LDPE,T0.08,W150,L120,-,-,-	S.N.A
..2		AA68-00856A	MANUAL USERS;J51A,W/P100(G),44P,B5,1,ENG	S.N.A
..2		AA68-00711A	CARD WARRANTY;ALL,W/P100G,-,-,-,-,-	S.N.A
..2		AA61-20126A	HOLDER-LEG;-,-,ABS,HB,BLK,-	S.N.A
..2		AA39-40001B	CABLE-RCA;-,RCA,1500mm,0.12/10,RED/WHT/Y	

REMOCON

1	*	AA59-00100A	REMOCON;-,TM57,KS88P0416S,53,L/GRAY,S/	

MEMO

SAMSUNG

ELECTRONICS

© Samsung Electronics Co., Ltd. **OCT. 2000**
Printed in Korea
3J51A-6111